LEROY SOMER®

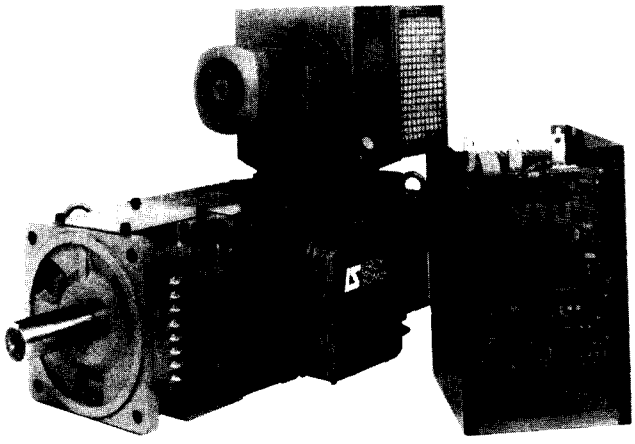

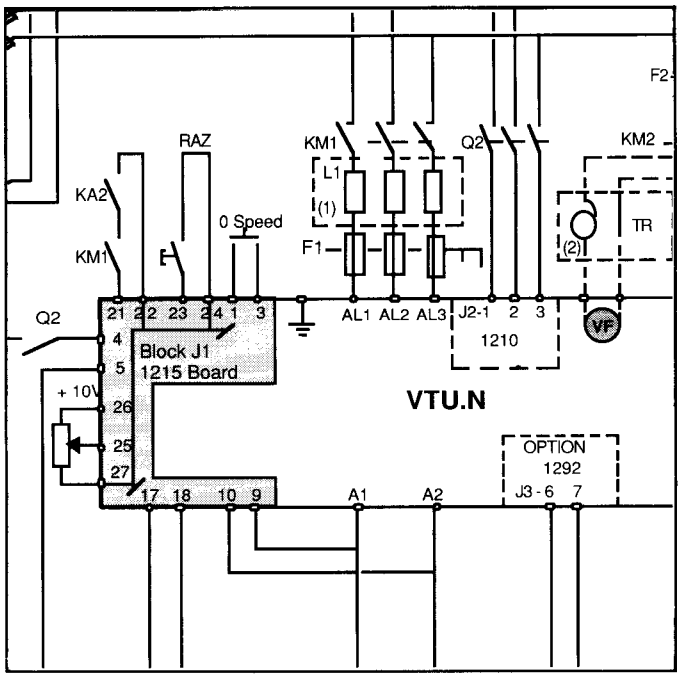

Réf. 313 - 03³/a - 10.89

VTU.N

Unidirectional three phase speed controller for D.C. motors

Installation and maintenance manual

NOTE

LEROY-SOMER reserves the right to modify the specifications of its products at any time, to take advantage of the latest technical developments. The information contained in this bulletin is therefore liable to change without notice.

LEROY-SOMER gives no guarantee, whether expressed or implied, covering the information contained in this bulletin, and accepts no responsibility for any errors contained therein, nor for damage occasioned by its use.

WARNING

- For user safety, this controller should be earthed. (⏚)
- The controller is fitted with safety devices which can, in the case of certain faults, stop the controller and the motor. The motor itself can be jammed by mechanical means. Finally, voltage fluctuations, and particularly power cuts can also cause the controller to switch off.
- The removal of the cause of the shutdown can lead to restarting, with consequent hazard for certain machines or installations, particularly those complying with the decrees of 15th July 1980 concerning safety.

In these cases, therefore, it is important for the user to protect against such risks of restarting, by fitting a zero speed detector which will cut the supply to the controller, in the case of unprogrammed stoppages.

This equipment meets existing standards. Nonetheless, it may create interference and the user accepts responsibility for carrying out the appropriate action to eliminate such interference.

AS A GENERAL RULE, ANY WORK ON THE MACHINE OR INSTALLATION, WHETHER ELECTRICAL OR MECHANICAL, SHOULD ONLY BE CARRIED OUT AFTER THE POWER SUPPLY TO THE CONTROLLER HAS BEEN SWITCHED OFF.

LEROY SOMER

CONTENTS

PAGES

1.- PRESENTATION
1.1-General 4
1.2-Controller components 4
• 1.2.1-Power board 1210 4
• 1.2.2-Security board 1214 5
• 1.2.3-Regulation board 1215 5
• 1.2.4-Test board 1282 5
• 1.2.5-Power bridge 5
1.3-Power table 6

2.- SPECIFICATIONS
2.1-Operational diagram 7
2.2-Electrical characteristics 8-9
2.3-Safety of VTU.N 10
• 2.3.1-VTU.N standard 10
• 2.3.2-VTU.N with optional board 1292 10

3.-INSTALLATION
3.1-Assembly precautions 11
3.2-Installation in protective cabinet 11
3.3-Dimensions - Attachments 11
• 3.3.1-VTU.N 38 to 420 A 11
• 3.3.2-VTU.N 600 to 1200 A 12
3.4-Installation of electronic boards 13

4.-CONNECTIONS
4.1-Recommendations 14
4.2-Recommended diagram 14
4.3-Standard diagram 15

5.-ELECTRONIC BOARDS
5.1-Personalisation board 1215 16
• 5.1.1-Block diagram 17
• 5.1.2-Potentiometers 18
• 5.1.3-Main components 18
• 5.1.4-Switches 18
• 5.1.5-Connectors 18
5.2-Test board 1282 19

6.-START-UP
6.1-Preliminary checks 20
6.2-Static settings 20
• 6.2.1-Equipment required 20
• 6.2.2-Supply voltage 20
• 6.2.3-Supply voltage frequency 20
• 6.2.4-Operation with DC tachometer 20
• 6.2.5-Operation with armature regulation 20
• 6.2.6-Excitation connection check 20

PAGES

6.3-Dynamic settings 21
• 6.3.1-Setting the limitation current 21
• 6.3.2-Setting maximum motor speed with DT regulation 21
• 6.3.3-Setting maximum motor speed with armature regulation 21
• 6.3.4-Setting acceleration and deceleration ramps 21
• 6.3.5-Setting the speed loop gain 21
• 6.3.6-Setting the current loop gain 22
• 6.3.7-Specific applications 22

7.- OPTIONS
7.1-Test box 23
7.2-The 1291 board 24
• 7.2.1-Presentation 24
• 7.2.2-Installation and connection 24
• 7.2.3-Settings 24
• 7.2.4-Installation of components 25
• 7.2.5-Block diagram 25
7.3-The 1292 board 26
• 7.3.1-Presentation 26
• 7.3.2-Installation and connection 26
• 7.3.3-Settings - selecting functions 26
• 7.3.4-Installation of components 27
• 7.3.5-Block diagram 27

8.-SPARE PARTS
8.1-Boards 28
8.2-Power thyristor 29
8.3-Motor excitation rectifier bridge 29
8.4-Fuses 30
8.5-Self-induction phase coils 30

APPENDIX : Diagram 31

1.-PRESENTATION

1.1 - GENERAL

The one-way, three-phase VTU.N controller is a full wave, thyristor speed controller for separately excited DC motors.
- It allows operation in the two quadrants of the torque speed diagram.
- If controlled by DC tachometer, the insulation is complete between the power and electronic circuits.
- Flexible starting and overcurrent of 1.6 in is possible for a period of 10 seconds.
- Leroy-Somer manufactures LSK series motors which are perfectly suited to VTU.N speed controllers.

1.2 - CONSTITUTION DU VARIATEUR

The compact VTU.N line comprises nine calibers from 38 to 1200 A.
The VTU.N power bridges are :
Calibers 38 and 75 A self-cooled.
Calibers 110 to 1200 A, fan-cooled.
The standard VTU.N comprises four printed circuit boards.

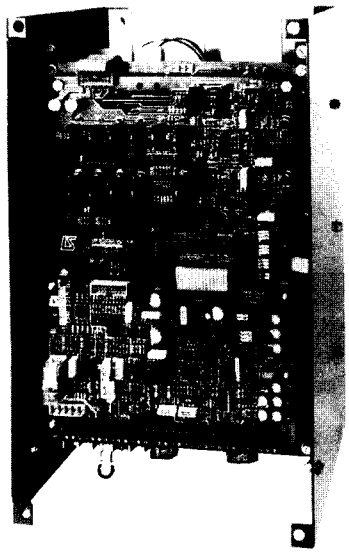

VTU.N 38 and 75

VTU.N 110 to 420 A

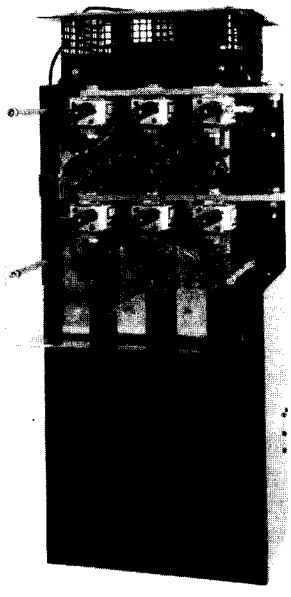

VTU.N 600 to 1200

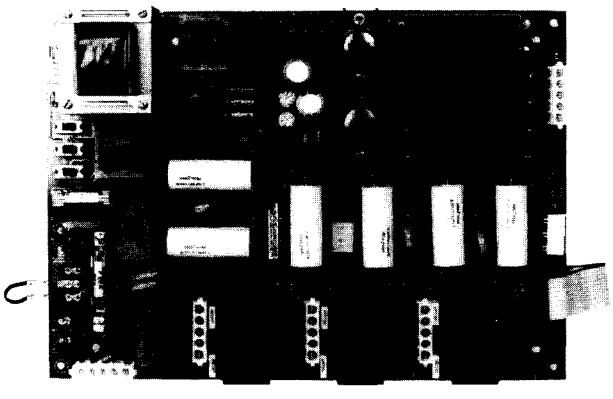

Power board 1210

1.2.1 - Power board 1210

This is the only board which changes in accordance with the caliber of the speed controller. It includes :
- the regulated power sources,
- The starting and protection circuits for thyristors,
- an AC and DC excitation terminal block,
- a separate 220V or 380V terminal block for the electronic circuit,
- switches for selecting high and low voltages from the mains power supply,
- a calibration circuit for speed controller current,
- synchronisation transformers.

1.2.2 - Security board 1214

This board comprises :
- the security circuit,
- the fault display LEDS,
- the firing pulse generator circuit,
- The connectors for mounting the optional 1291 and 1292 boards,
- the switches for selecting the 50 or 60 Hz mains frequency.

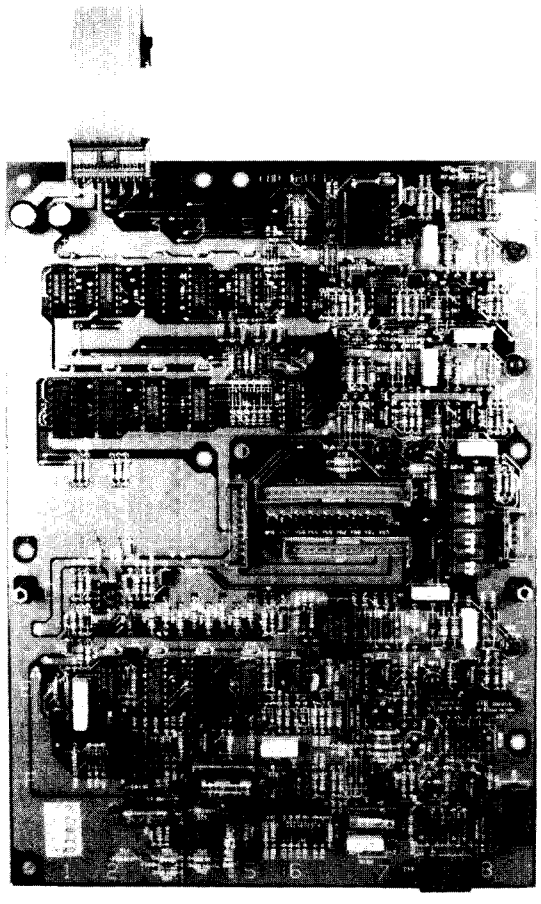

Security Board 1214

NOTE : The potentiometers on this board are factory-set. Do not touch them.

1.2.3 - Regulation board 1215

This board comprises :
- the current control,
- the speed servo,
- the ramp circuit,
- the personalisation and setting potentiometers,
- the customer terminal pack,
- the fault relays,
- the test connector for connecting the test board 1282 and the test box (optional).

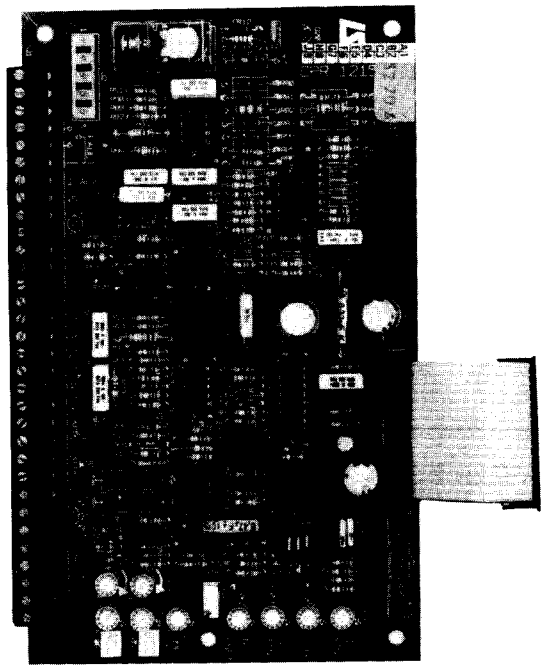

Control Board 1215

1.2.4 - Test board 1282

This board allows easy access to tests points for installation or in case of breakdown.

1.2.5 - Power bridge

On the power bridge heat sink are mounted:
- 3 thyristor modules,
- 2 current transformers (VTU.N ≤ 420 A),
- 1 thermocontact,
- 1 excitation bridge rectifier (VTU.N ≤ 420 A).

1.3 - POWER TABLE

TYPE OF VARIABLE-SPEED CONTROLLER	THREE-PHASE 50/60 Hz POWER SUPPLY WITHOUT NEUTRAL WIRE		OUTPUT TO MOTOR		RATED POWER OF MOTOR (APPROXI-MATE)	EXCITATION VOLTAGE
	Rated current (A)	Input voltage (V)	Rated current (A) (1)	Armature voltage (V) (2)	kW	(V) (3)
VTU.N 2-38	32	220/240	38	250/280	8,5	95/190
VTU.N 2-75	62	220/240	75	250/280	17	95/190
VTU.N 2-110	90	220/240	110	250/280	26	95/190
VTU.N 2-170	140	220/240	170	250/280	41	95/190
VTU.N 2-300	250	220/240	300	250/280	75	95/190
VTU.N 2-420	345	220/240	420	250/280	105	95/190
VTU.N 2-600	500	220/240	600	250/280	150	95/190
VTU.N 2-900	750	220/240	900	250/280	225	95/190
VTU.N 2-1200	1000	220/240	1200	250/280	300	95/190
VTU.N 3-38	32	380/415	38	440/480	14,5	170/340
VTU.N 3-75	62	380/415	75	440/480	28	170/340
VTU.N 3-110	90	380/415	110	440/480	44	170/340
VTU.N 3-170	140	380/415	170	440/480	70	170/340
VTU.N 3-300	250	380/415	300	440/480	125	170/340
VTU.N 3-420	345	380/415	420	440/480	177	170/340
VTU.N 3-600	500	380/415	600	440/480	260	170/340
VTU.N 3-900	750	380/415	900	440/480	390	170/340
VTU.N 3-1200	1000	380/415	1200	440/480	530	170/340
VTU.N 4-38	32	440/460	38	510/530	16	170/340
VTU.N 4-75	62	440/460	75	510/530	32	170/340
VTU.N 4-110	90	440/460	110	510/530	49	170/340
VTU.N 4-170	140	440/460	170	510/530	78	170/340
VTU.N 4-300	250	440/460	300	510/530	140	170/340
VTU.N 4-420	345	440/460	420	510/530	195	170/340
VTU.N 4-600 VTU.N 4-900 VTU.N 4-1200	DEVELOPMENT IN PROGRESS					

(1) The above values are for ambient temperature between 0°C and 40°C. For temperatures up to 60°C, the current is degraded by 1.2 % for each additional °C.

(2) Maximum armature voltage with motor running. Multiply by 0.9 to obtain the maximum armature voltage in current recovery.

(3) Use an autotransformer to obtain an excitation voltage of 170/340 V from a 440/460 V mains supply.

2.-SPECIFICATIONS

2.1 - OPERATIONAL DIAGRAM

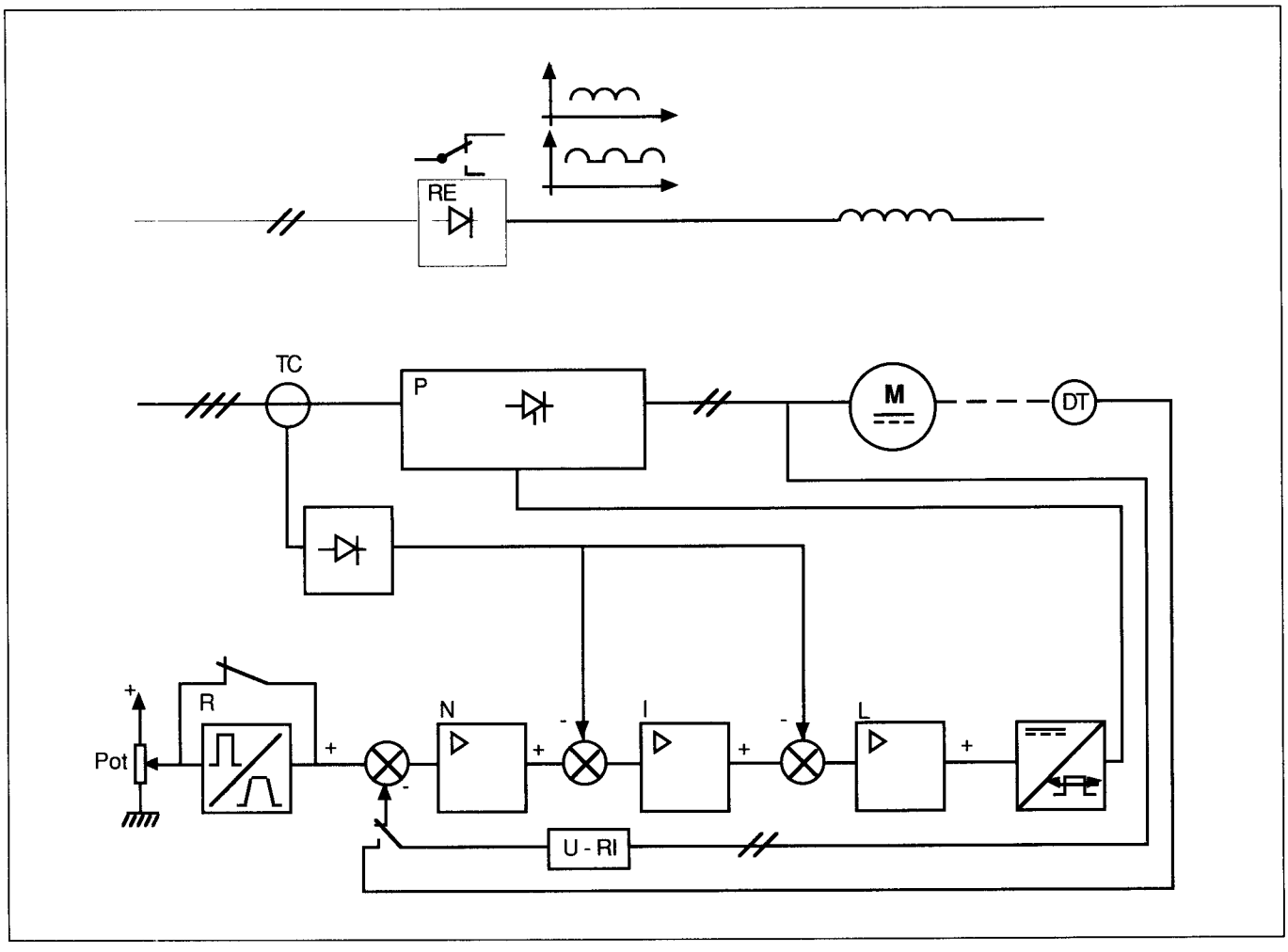

RE : Excitation bridge rectifier, single of dual alternation.
P : Three-phase Graëtz bridge.
TC : Current transformer.
R : Ramp.
N : Speed loop.
I : Current loop.
L : Linearisation loop.

The regulation system adopted includes multiple loops in cascade. The outside loop sets the principal controlled variable which is speed (N). The output at this speed regulation stage influences the second regulated variable, current (I). In addition, the Graëtz bridge is subject to two continuous/discontinuous conduction modes in which the gain of the motor converter loop is different. This may give rise to regulation instabilities in the discontinuity zone. Regulation therefore includes a linearisation stage (L) with the characteristic I = F (V control).

2.2 - ELECTRICAL CHARACTERISTICS

SPECIFIC DATA	ELECTRICAL SPECIFICATIONS	SETTINGS OR CONNEC-TIONS
Voltage, frequency of the three-phase power supply	220/240 V ± 10 % 380/415 V ± 10 % 440/460 V ± 5 % / 10 % } 50/60 Hz ± 2 %	S1, S2, S3,S4 (1214)
Recommended armature voltage, depending on mains voltage.	Armature U ≤ Mains U x 1016	
Excitation mains voltage.	Maximum mains voltage : 380 V Excitation U ≃ 0.9 mains U in dual alternation ≃ 0.45 mains U in single alternation	S4 of (1210) for VTU.N 38 and 75 A
Maximum excitation current.	16 A	
Limitation of armature current	Adjustable from 50 to 100 % of the rated controller caliber	R110 (1215)
Possible overcurrent	≃ 160 % of rated motor I for 10 seconds (maximum : 10 times/hour)	
Speed range.	1 to 300 with DC tachometer 1 to 20 with armature feedback U but accuracy depends on motor	R107 (1215)
Accuracy with variation : - in resistor torque from 0.2 TN to TN - in mains voltage ± 10 % - in ambient temperature 20°C ± 20°C	With DC tachometer: ± 0.1 % of rated speed ± 0.2 % of preset speed ± 0.1 % of preset speed with external reference.	
Speed feedback with DC tachometer. Armature feedback U	Three setting positions : 60 V - 130 V - 300 V. One setting position (check R93 on 1215)	S4 and R107 (1215)
Acceleration and deceleration ramp	Acceleration and deceleration times set separately from 0,5 to 60 s by coarse and fine setting (S2 in 2).	R105 - R115 R106 - R116 (1215)
External locking	By contact opening on terminal block	J1 - 21 J1 - 22 (1215)
External reset	By pulse generation from contact on terminal block.	J1 - 23 J1 - 24 (1215)

SPECIFIC DATA	ELECTRICAL SPECIFICATIONS	SETTINGS OR CONNEC-TIONS
Speed value : - in voltage. - in isolated voltage with optional board 1291. - in current by signal with optional board 1291.	 0 +10 V isolated either by 2.2 kΩ potentiometer connected to the internal source + 10 V or by analog signal delivered by an external source (input impedance 47 kΩ). 0 +10 V isolated either by 2.2 kΩ potentiometer connected to the internal source + 10 V or by analog signal delivered by an external source (input 100 kΩ). - 0 - 16 mA - 0 - 20 mA - 4 - 20 mA	(1215) J1 - 25 J1 - 31 and S1 in 2 J1 - 29 and S1 in 2
Torque control	Use ESI input from 0 to + 6.6 V 6.6 V → Nominal current controller. Open S5/1	J1 - 7 (1215)
Regeneration operation	Use ESI input to set regenerative torque.	J1 - 7 (1215)
Second speed reference	Use ESN input from 0 to + 10 V	J1 - 20 (1215)
Output relays maximum electric specifica-tions for contacts	- Relay fault - Zero speed relay } Option 1292 } 5A 250V AC - Relay I threshold	K1 - 1215 K1 - (1292) K2 - (1292)
Degree of protection	IP 00	
Ambient temperatures : - in operation - in storage	 - 0°C to 40°C (operation possible to 60°C by downgrading current by 1.2 % for each additional °C - 25°C to + 70°C	
Downgrading based on altitude	Downgrade current by 0.7 % for each 100 m in excess of 1000 m	

2.3 - SAFETY OF VTU.N

2.3.1 - Standard V.T.U.N

DESCRIPTION	SETTING VALUE	MEMORISED	SIGNALLED BY LED
T° power bridge		YES	CR 58
Supply voltage ± 15 V	± 13 V to ± 17 V	YES	CR 59
Instantaneous excess current	2.5 In	YES	CR 60
Overload time	1.6 In during 10 seconds	YES	CR 61
Monitoring lack of phase		NO	CR 62
Monitoring mains drop by micro power cuts	Vn -15 %	NO	NO

2.3.2 - V.T.U.N with optional board 1292

DESCRIPTION		SETTING VALUE	MEMORISED	SIGNALLED BY LED	
Motor stalled			YES	CR 55	
MOTOR FAULT	DT failure		YES	CR 56	CR 20 on 1292
	Motor overheating	C.T.P.			CR 21 on 1292

NOTE :
- All these security devices block thyristor logic control and regulation.
- Memorised security device settings must be reset by the speed controller (J1-23 from J1-24 board 1215) or the power contactor must drop.

3.-INSTALLATION

3.1 - ASSEMBLY PRECAUTIONS

- Set the controller vertically so that air circulates upwards through the heater vents. Keep away from heating elements. If placed in a cabinet, shutters should be made for forced circulation and an opening made on the top with a protective hood.
- Insulation : with the exception of the earth terminal, none of the connectors linked to the terminal block should be connected to earth.
- External presetting circuits for speed and feedback (DC tachometer) must be wired using twisted cables (pitch ≤ 5 cm), or shielded cables. Keep control wires and power cables separate.

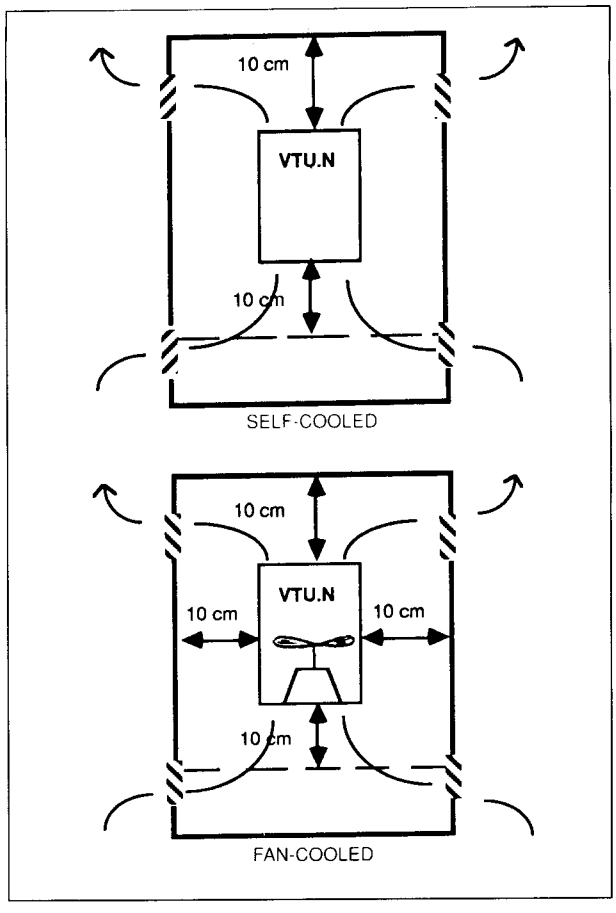

3.2 - INSTALLATION IN PROTECTIVE CABINET

When installing VTU. N speed controllers in cabinets, it is vital that air be renewed to ensure cooling.
- Calibers 38 A and 75 A (self-cooled) ; leave an open space of at least 10 cm above and below the speed controler
- Calibers 110 A to 1200 A (fan-cooled).

Air flow = 0.18 m³/s (caliber 110 A to 420 A)
0.3 m³/s (caliber 600 A to 1200 A)

3.3 - DIMENSIONS - ATTACHMENTS

3.3.1 - VTU.N Speed Controllers : 38A to 420A

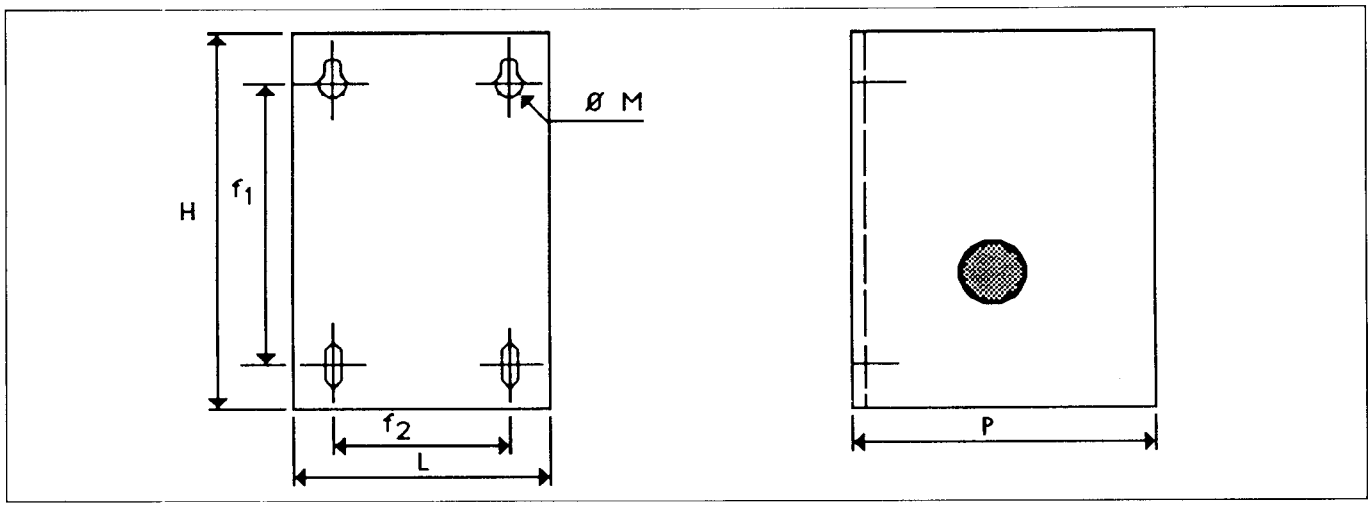

VTU.N	H	L	f1	f2	P	ø M	WEIGHT
38 et 75A	362	230	338	190	255	6	15
110 et 170A	503	230	483	190	275	6	27
300 et 420A	503	230	483	190	355	6	30

3.3.2 - VTU.N Speed Controllers : 600A to 1200A

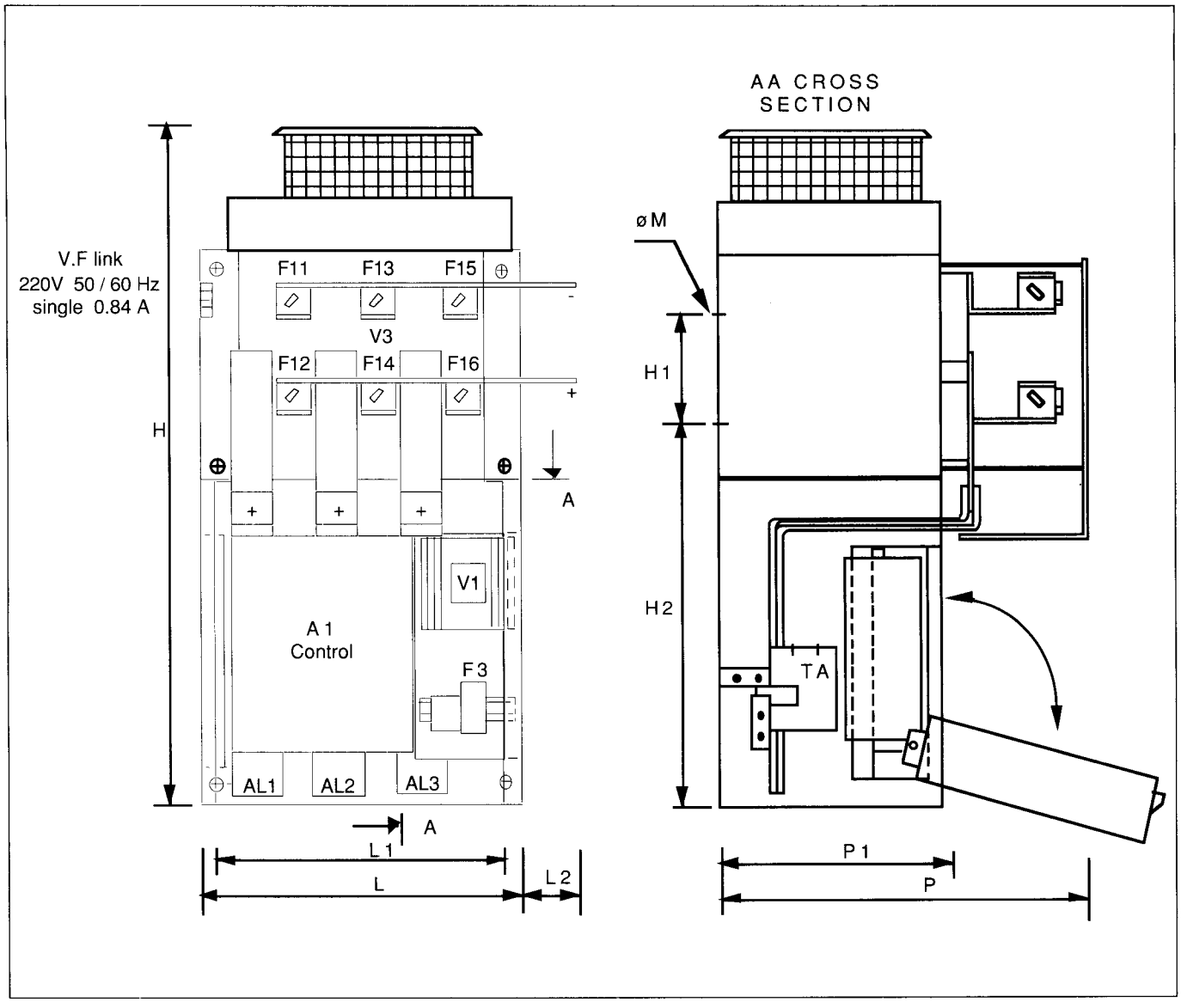

VTU.N	H	H1	H2	L	L1	L2	P	P1	ø M	WEIGHT
600A										60
900A	955	280	480	376	336	50	415	240	8.5	60
1200A										65

NOTE : The dimensions given above are supplied for information only and may be modified. The company is under no obligation until the final agreement of our design departments.

3.4 - INSTALLATION OF ELECTRONIC BOARDS

VTU.N 38 and 75 Amperes

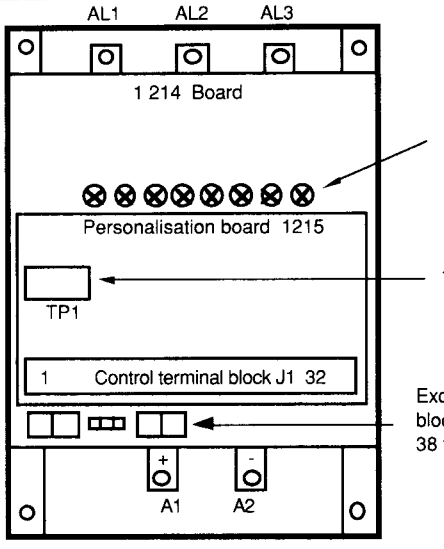

VTU.N 110 to 420 Amperes

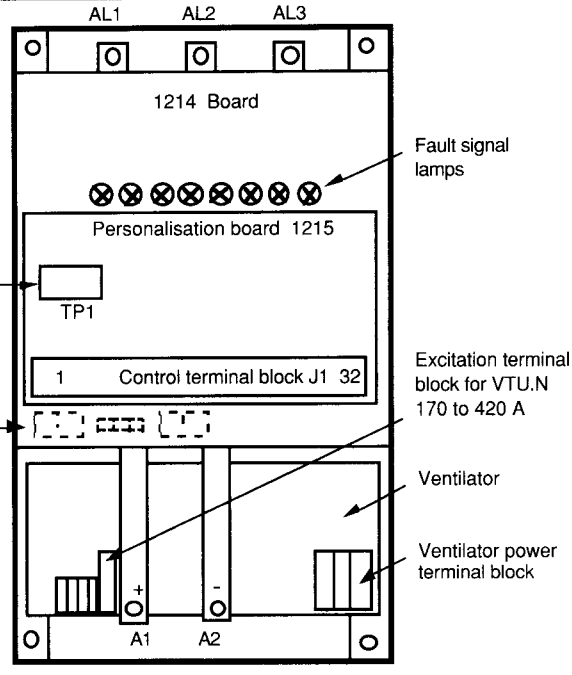

VTU.N 38 to 110 Amperes

DETAIL OF EXCITATION TERMINAL BLOCK

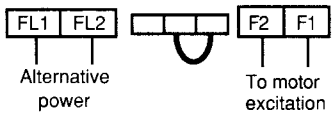

220V.....170 or 190V
380V..... 340V

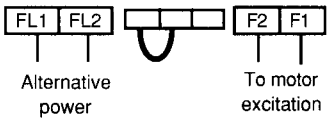

380V.....170 or 190V =

VTU.N 600 to 1200 Amperes

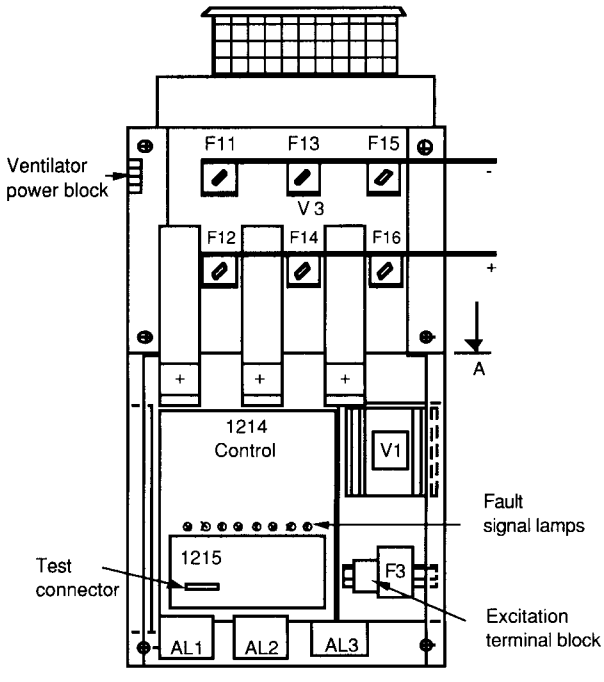

VTU.N 170 to 1200 Amperes

Excitation power terminal block

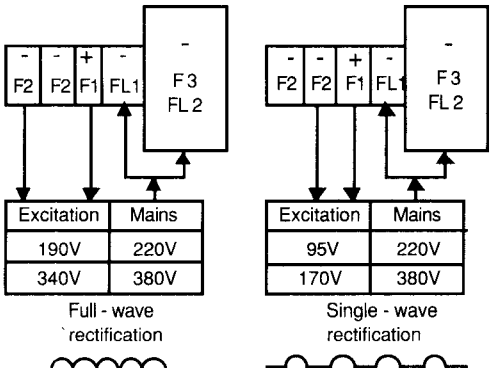

4.-CONNECTIONS

4.1 - RECOMMENDATIONS

We recommend that you connect your VTU.N as shown in the block diagram in paragraph 4.2. The following advantages are gained if the electronics section is powered externally and the optional board 1292 is used :

- Suppression of the thermal relay on the power section.
- The controller "fault" contactor inserted in the security chain allows the power contactor to open and keeps the fault in memory (LED display).
- Suppression of motor sensor relay on the power side.
- Safety devices
  . DC tachometer failure
  . motor overheating
  . Anti-stall
- Informations
  . Output 0 + 10 V proportional to motor speed
  . Contacts on current threshold relay
- Connection

On reception of optional board 1292, pull out the J2 connection on the side of the 1210 board and use the connector supplied separately to power the electronic section. Respect the phase sequence between the power and electronic sections.

NOTE : With optional board 1292, the galvanic insulation between the electronic and power sections is brought down to a value of 1 MΩ.

4.2 - RECOMMENDED DIAGRAM

(external power to electronics + optional board 1292)

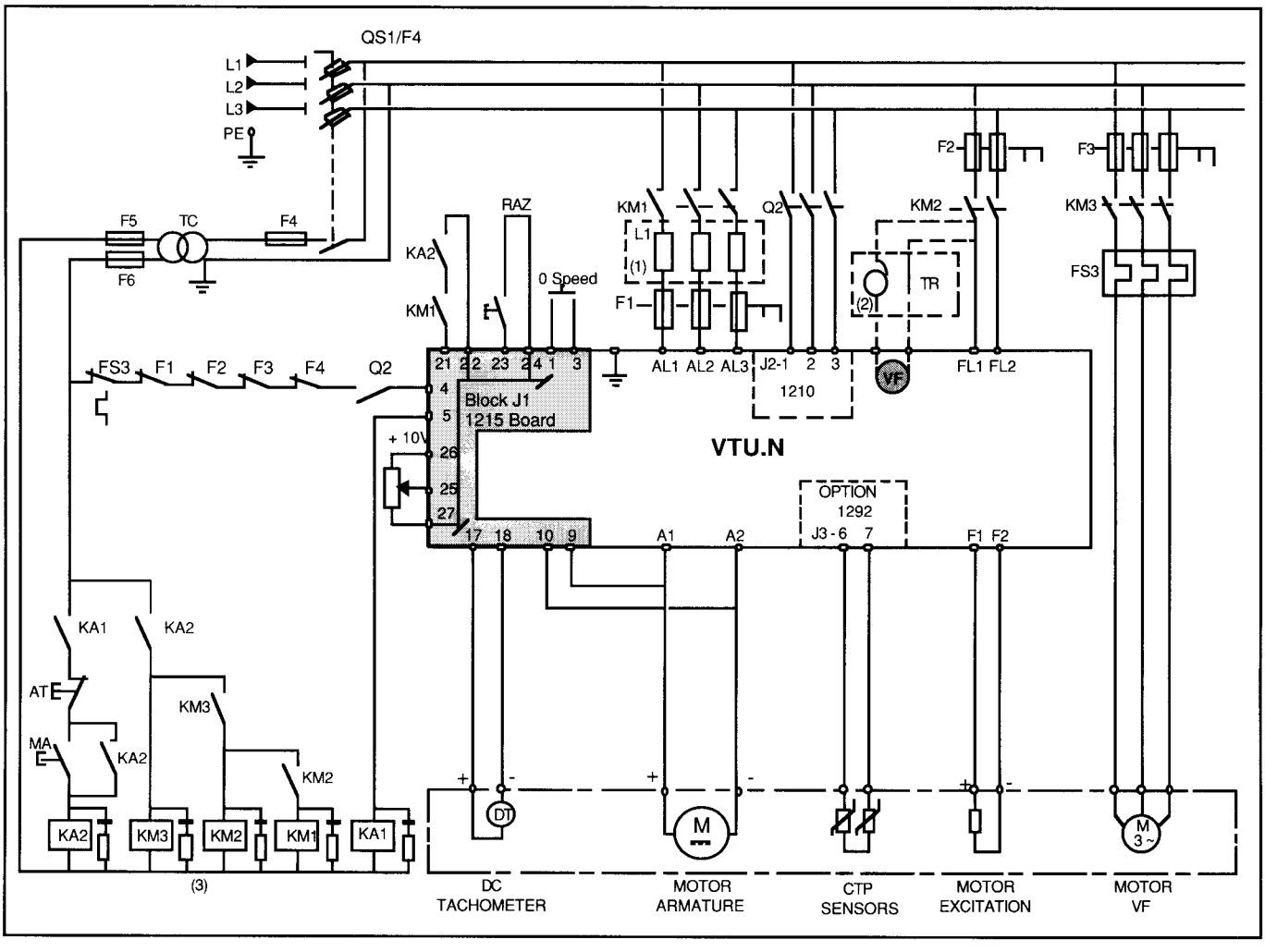

NOTE :

(1) Three-phase self-induction coil on request.

(2) - For VTU.N 110 to 420 A, install an auto-transformer for 220 V - 50 Hz - 250 VA ventilation if the mains power supply is other than 220 V - 50 Hz

- For VTU.N ≥ 600 A, three-phase power to ventilation.

(3) We recommend the installation of RCs on the remote control windings.

4.3 - STANDARD DIAGRAM

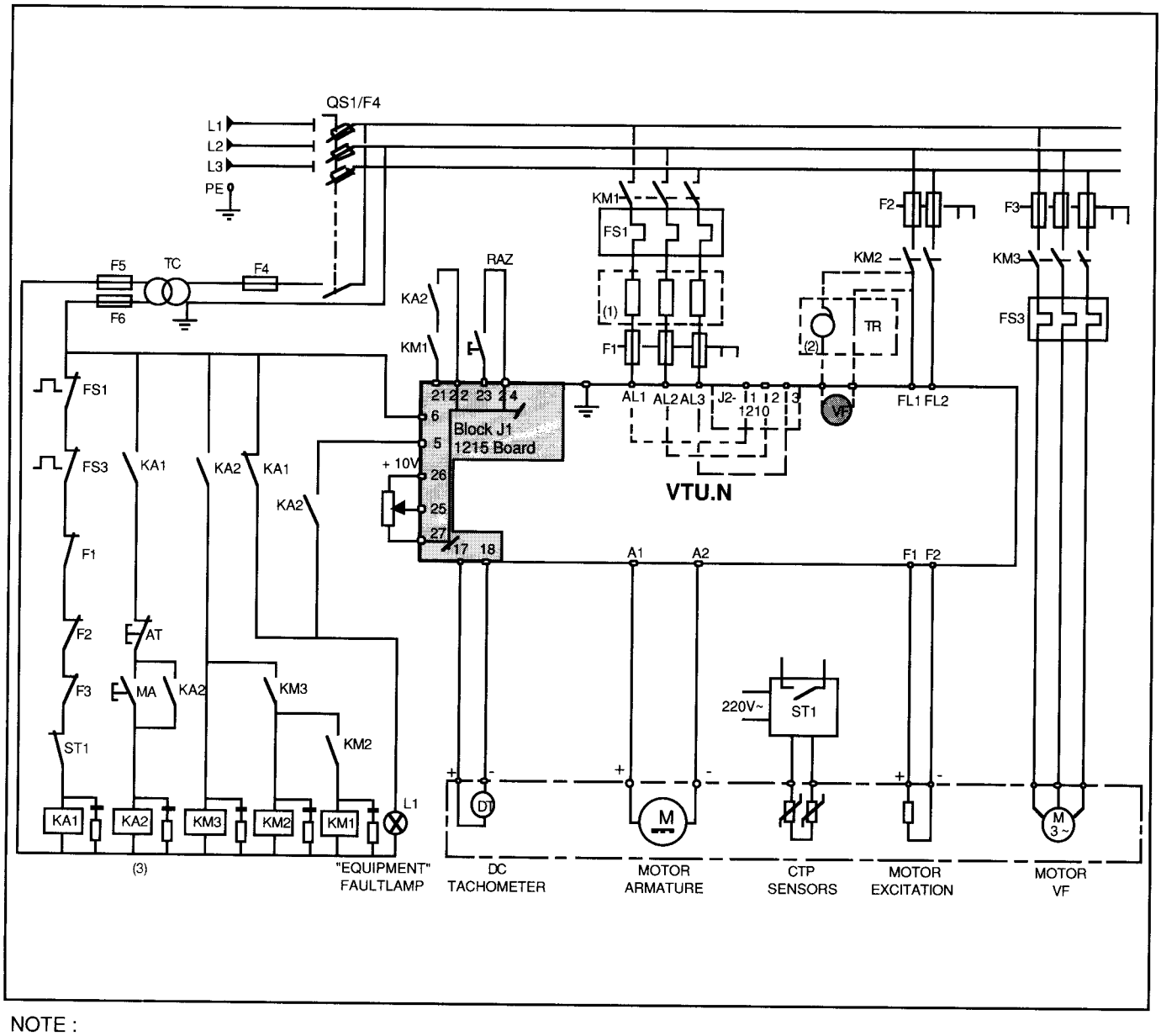

NOTE :
(1) Three-phase self-induction coil on request.
(2) - For VTU.N 110 to 420 A, install an auto-transformer for 220 V - 50 Hz - 250 VA ventilation if the mains power supply is other than 220 V - 50 Hz
- For VTU.N ≥ 600 A, three-phase power to ventilation.
(3) We recommend the installation of RCs on the remote control windings.

5.- ELECTRONIC BOARDS

5.1 - PERSONALISATION BOARD 1215

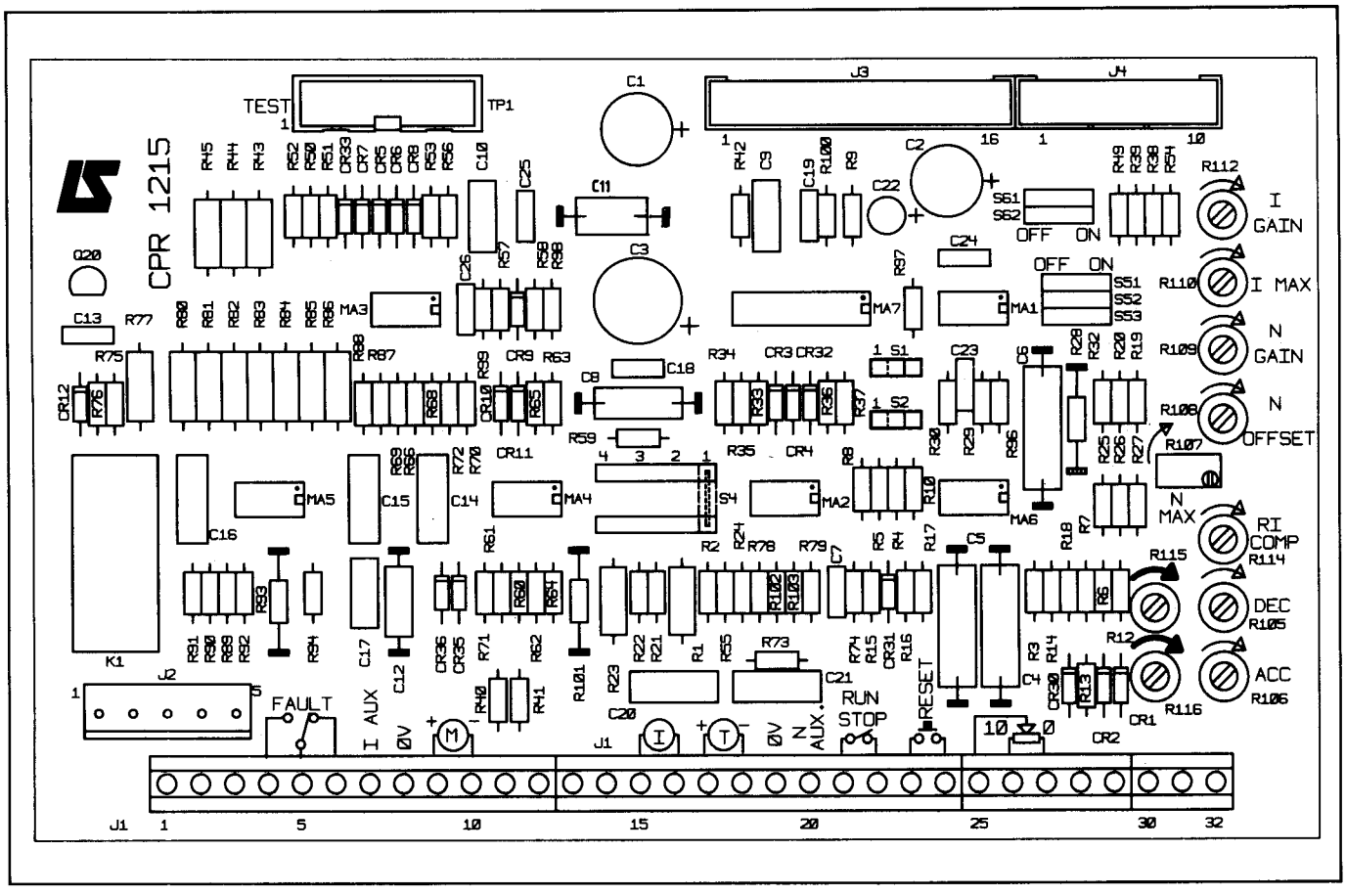

Customer terminal block J1

J1

1 } 1292 plate null speed relay contacts - work
2 - rest
3 - common

4 } general fault relay contacts - work
5 - common
6 - rest

7 Additional input current 0 to + 6.6 V
(In speed controller = + 6.6 V)

8 0V

9 + U induced } to be connected in the event
10 - U induced } of induction voltage regulation or with optional board 1292

11 Back EMF image

12 } for special applications
13

14 0V

15 0V

16 Output current index 0 to + 8.1 V

17 DT return (positive polarity)

18 DT return (negative polarity)

19 0V

20 Additional input current 0 to +10 V

21 Speed controller unlocking by 0V

22 0V

23 Reset controller by pulse to 0V

24 0V

25 Speed index input 0 to +10 V

26 + 10 V

27 0V

28* Insulated 0V

29* Insulated current control 0 to 16 mA ;
0 to 20 mA ; 4 to 20 mA

30* Insulated 0V

31* Insulated speed index input 0 to +10 V

32* Insulated +10 V

* Terminals 28 to 32 only used with optional board 1291

5.1.1 - Block diagram

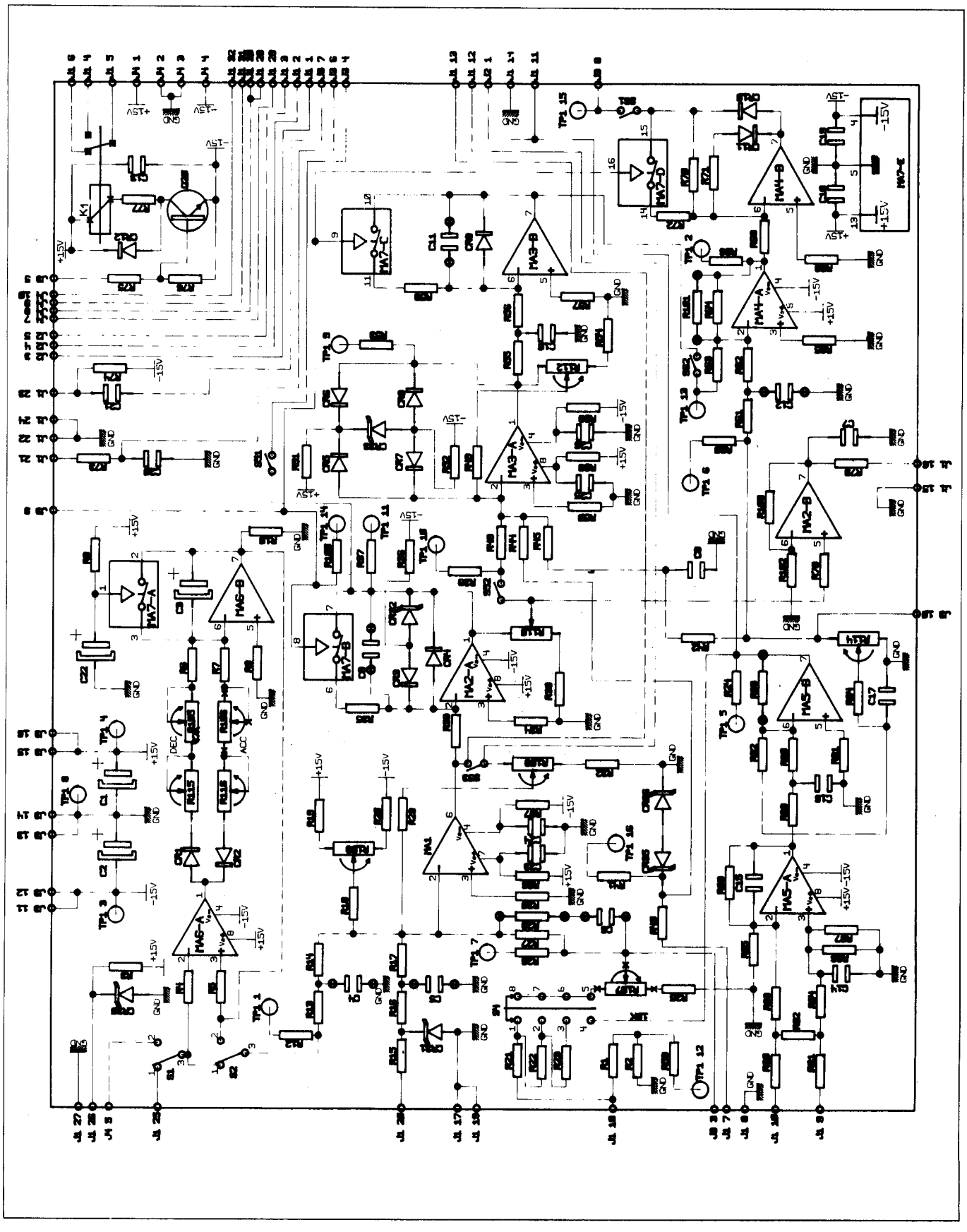

5.1.2 - Potentiometers

NOTE = Turn the potentiometers clockwise to increase power.
R105 : Deceleration ramp fine setting.
R106 : Acceleration ramp fine setting.
R115 : Deceleration ramp coarse setting.
R116 : Acceleration ramp coarse setting.
R107 : Maximum speed setting.
R108 : Speed error amplifier offset setting.
R109 : Speed loop gain setting.
R110 : Motor rated current setting.
R112 : Current loop gain setting.
R114 : R1 compensation setting for induced current regulation.

5.1.3 - Main components

R28 : Correction resistor for speed return.
R93 : Gain resistor for amplifier executing U - RI.
R101 : Linearisation loop gain setting resistor.
C4 : Speed index filtering capacitor.
C5 : Additional speed input filtering capacitor.
C6 : Speed return corrector capacitor
C11 : Current loop integrator capacitor.
C12 : Linearisation loop filtering capacitor.

5.1.4 - Switches

S1 : Index selection 0 to 10 V (position 1) or 0 to 10 V isolated (position 2) with optional board 1291.
S2 : Direct speed index selection (position 1) or via the double ramp (position 2).
S4 : DC tachometer voltage selection.
Position n°1 : DT voltage between 20 V and 60 V for motor maximum N.
Position n°2 : DT voltage between 50 V and 130 V for motor maximum N.
Position n°3 : DT voltage between 100 V and 300 V for motor maximum N.
Position n°4 : Control by induced voltage return (E = U = RI).
S5/1 : Eliminates delayed, overcurrent fault.
Warning - request factory by agreement to set to OFF.
S5/2 : Isolates speed loop in current loop.
S5/3 : Set to ON.
S6/1 : Isolates the delay angle control for starting the rest of the regulation. Must be set to "ON" during normal operation.
S6/2 : Isolates the linearisation loop in the current loop. Must be set to "ON" during normal operation.

5.1.5 - Connectors

J1 : Customer connection terminal block located on personalisation board 1215.
J2 : Terminal block linking optional board 1292 to 1215 board.
J3 : Block linking board 1214 to board 1215.
J4 : Links optional board 1291 to board 1215.
TP1 : Connects test board 1282 or test box.
K1 : Fault relay.

5.2 - TEST BOARD 1282

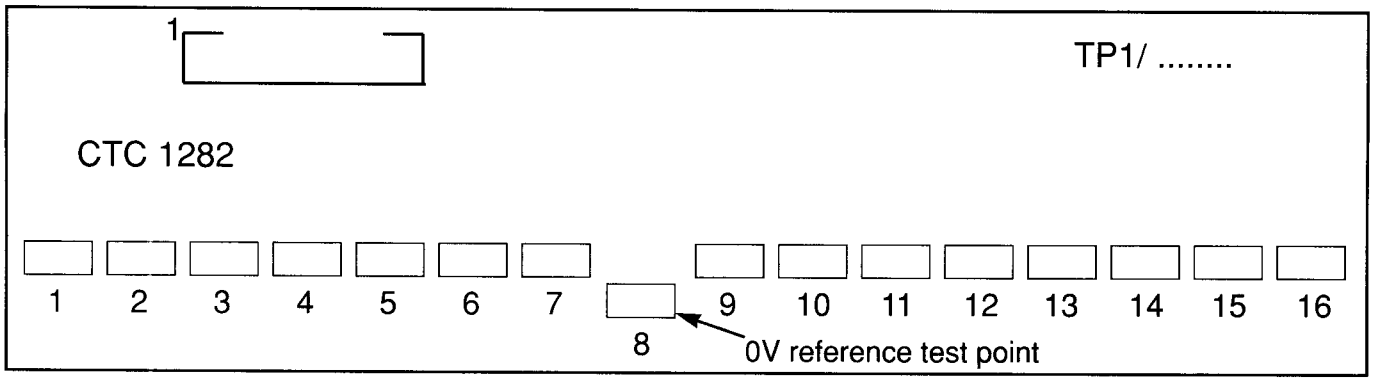

TEST POINT	FUNCTION	SIGNALS TO BE OBTAINED UNDER NORMAL OPERATING CONDITIONS
TP1/1	Ramp output connection speed reference	Varies from 0 to +10 V more or less rapidly depending on R105, R106, R115 and R116 setting
TP1/2	Linearisation derivative amplifier output	Varies from 0 V to +10 V depending on load and speed (+10 V full load and max. N)
TP1/3	-15 V	-13 V < UTP 1/3 < -17 V
TP1/4	+15 V	+13 V < UTP 1/4 < +17 V
TP1/5	Back electromotive force image (EMF)	Varies from 0 to -11 V. -11 V corresponds to rated induced U depending on speed controller caliber
TP1/6	Controller current amplifier	0 to -8.1 V (-8.1 V for speed controller 1.6 In)
TP1/7	Speed image	Varies from 0 to -10 V (-10 V for max. speed)
TP1/8	Zero volt	
TP1/9	Current amplifier output	Current varies from 0 to 5.1 V (depending on load)
TP1/10	Current loop input	Varies from 0 to +8.1 V (8.1 V for 1.6 rated speed. controller In and R110 at clockwise limit)
TP1/11	Speed amplifier output	0 to +8.1 V (8.1 V for rated controller 1.6 In)
TP1/12	DT return	60 V DT return = 3 V on TP1/12
TP1/13	Linearisation loop input	0 to +6 V (6 V for rated controller1.6 In)
TP1/14	Controller locking data	0V : controller locked, +8 V : unlocked
TP1/15	Thyristor control	0 V to +10 V (motor operation + 5 V to + 10 V with 10 V for max. N and controller 1.6 In)
TP1/16	Additional current input	For special applications. Apply 0 to +6.6 V (6.6 V for controller In)

6.-START-UP

6.1 - PRELIMINARY CHECKS

- The speed controller is factory set to satisfy the most common operating conditions.
- Check compatibility between mains, speed controller and motor by examining identification tags and plates on the equipment.
- Check that the wiring complies with the sequence diagram.
- Check that connections and terminal links are secure and that connectors are properly plugged into the speed controller.
- In the case of a voltage reference index, check the connection of the speed index potentiometer as well as its ohmic value.
- Recommended value : 2.2 kΩ. Power 2 W
- Check phase balance between electronic and power sections for recommended diagram(chap. 4-2).

6.2 - STATIC SETTINGS

6.2.1 - Equipment required

- A multimeter, preferably 20.000 ohms/volt.
- A two-way oscilloscope, if necessary.
- If required, a mobile ammeter with shunt.

6.2.2 - Supply voltage

Set the three switches S1, S2 and S3 on the back of the 1210 board. They must be pushed upwards for low voltages (eg. 360 < U < 380 V) and downwards for high voltages (eg. 380 < U < 415 V).

6.2.3 - Supply voltage frequency

Set all the switches on the 1214 mother board to the position corresponding to the mains power frequency 50 or 60 Hz. Set all switches (S1 to S4) to the same position.
Check that :
- all switches on board 1215 are set to "ON".
- the resistor values of board 1215.

R 101 : 220 kΩ for VTU N of 38 A
R 101 : 100 kΩ for VTU N of 75 A
R 101 : 47 kΩ for VTU N ≥ 110 A

6.2.4 - Operation with DC tachometer

The + of the DT must be connected to terminal J1 - 17
The - of the DT must be connected to terminal J1 - 18
Be sure to check the polarities of the DT. To do this, turn the motor manually, in a clockwise direction when looking at the end of the shaft.
(This is the direction of rotation of the motor if the polarities have been respected on armature A1(+) ; A2 (-) and on excitation F1 (+) ; F2 (-).

6.2.5 - Operation with armature regulation (without DT)

Check that terminal A1 of the armature is connected to J1-9 and that terminal A2 of the armature is connected to J1-10.
In this case, there is no perfect galvanic insulation between power and control circuits but a high-impedance insulation permitting proper functioning of the VTU.N.
Verify that the value of the R93 resistor on the 1215 board is indeed 270 kΩ for an armature voltage of 260 V and 150 kΩ for an induced 440 V.

6.2.6 - Excitation connection check

VTU.N 38 to 110 Amperes

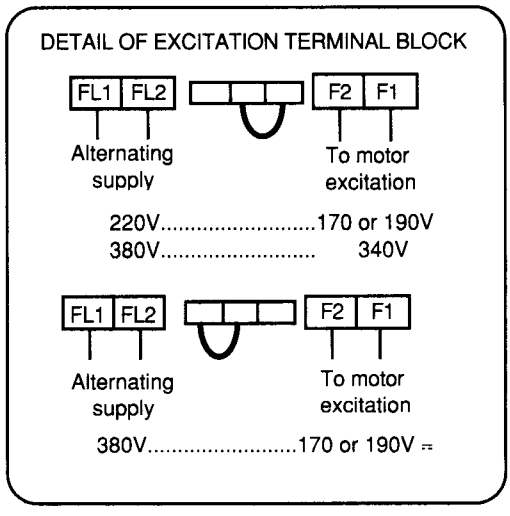

VTU.N 170 to 1200 Amperes

Excitation power terminal block

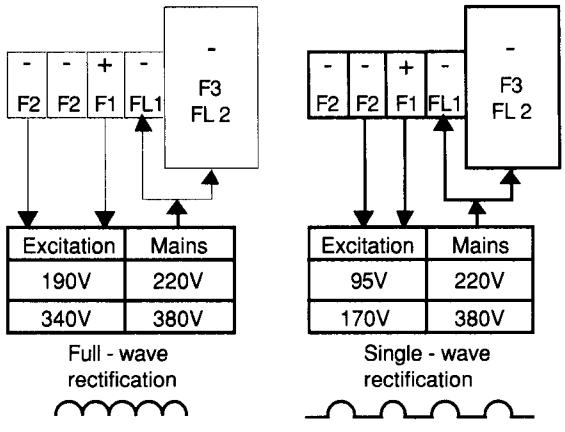

6.3 - DYNAMIC SETTING

6.3.1 - Setting the limitation current

Factory preset value : 50 % of speed controller caliber.

Disconnect the excitation power on the alternative side (FL1, FL2).

There are two methods :

- Method one : the VTU.N allows a current overload of 1.6 In for 10 seconds. Beyond this period, it locks to I = F(t) (CR 61). This must be carried out quickly since the motor and the commutator blades may overheat.

TURN POWER ON and start operation. Display a speed index of more than 5 volts at J1-25. The speed controller will fix a current limit at 1.6 In. Using R110, set the value read on an ammeter or a shunt, to 1.6 times the motor current.

TURN POWER OFF.

- Method two : this gives a more accurate setting which is less burdensome to the motor.

. Hook up a voltmeter between test points TP1/11 and TP1/8 on test board 1282 which is connected to the TP1 test socket on the 1215 board.

- Open S5/1 and S6/1.

TURN POWER ON and start operation.

Display a speed index of more than 5 volts at J1-25.

- Read the voltage on test point TP1/11. This voltage, approximately 8.1 V, corresponds to the current value of the rated speed controller caliber.

- Connect the voltmeter between test points TP1/10 and TP1/8 and use R110 to obtain a voltage at point TP1/10 which is equal to :

$$UTP1/10 = UTP1/11 \times \frac{\text{rated motor current}}{\text{rated controller current}}$$

Exemple : VTU.N 3 110 to be set for LSK 132 M0 9

I rated speed controller = 110A

I rated motor = 78A

After sending an increment ≥ 5V on J1-25 a measurement is taken on UTP1/11 = 8.05 V. R110 must be set to obtain UTP1/10 = 8.05 x 78/110 = 5,7 V

TURN POWER OFF and close S5/1 and S6/1

NOTE : R110 Maxi in a clockwise direction corresponds to the speed controller caliber. R110 Maxi in an anticlockwise direction corresponds to the half of the speed controller caliber. R110 has a linear course.

6.3.2 - Setting maximum motor speed with DT regulation

After checking the connection polarities of the DT (see Chap. 6.2.4), reconnect be excitation power supply and select the S4 jumper position (board 1215) depending on the rated speed of the motor as shown below.

S4 at 1 : 20 V < U DT < 60 V
at 2 : 50 V < U DT < 130 V
at 3 : 100 V < U DT < 300 V

TURN POWER ON and start operation. Set the speed index to maximum (+ 10 V), adjust the maximum motor speed with R107 by measuring the voltage read on the return DT [J1-17 (+) and J1-18 (-)].Turn R107 clockwise to increase speed. Be sure that this voltage corresponds to the motor armature voltage between

A_1 (+) et A_2 (-).

Do not exceed the maximum voltage specified on the motor tag.

TURN POWER OFF.

6.3.3 - Setting maximum motor speed by armature control

Put S4 to position 4, check that the + U is wired in J1-9 and the - U in J1-10.

TURN POWER ON and start operation. Set the speed index to maximum (+10 V), adjust the maximum motor speed with R107 by measuring the armature voltage read between A1+ and A2- (this corresponds to -11V on the test point TP1/5).

Charge the motor and use R114 to compensate for any fall-off in speed.

6.3.4 - Setting acceleration and deceleration ramps

The S2 switch (1215 board) selects and deselects the ramp. Set to position 2 to make the ramp operational.

R105 allows fine setting the deceleration ramp.

R115 allows course setting the deceleration ramp.

R106 allows fine setting the acceleration ramp.

R116 allows course setting the acceleration ramp.

Turn these potentiometers clockwise to increase ramp time which is adjustable from 0.5 to 60 seconds.

6.3.5 - Setting the speed loop gain

This adjustment is done with the ramps set to the minimum. Link TP1/8 and TP1/7 with an oscilloscope lead.

TURN POWER ON and start operation. Send a speed command of about 5 V and observe the DT return signal. It must reach its speed index as rapidly as possible and without undue delay.

Adjust the gain by the R109 potentiometer.

TURN POWER OFF.

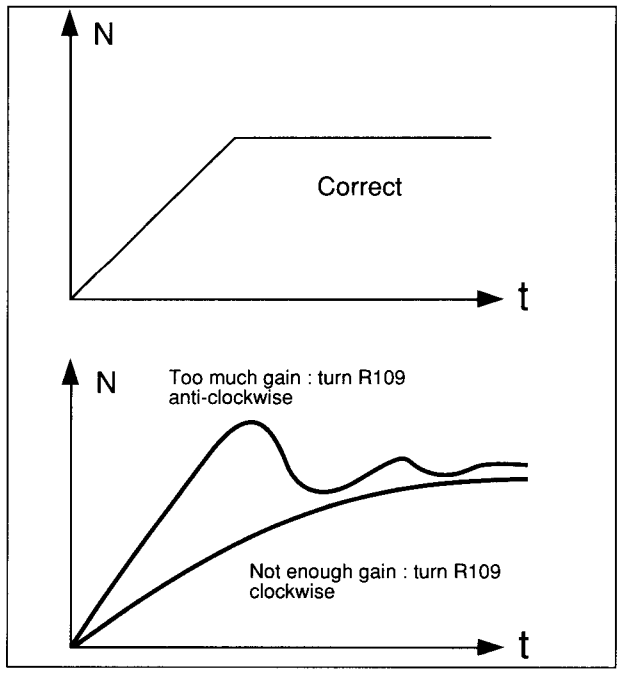

It may be necessary to modify the value of C6 (original value 0.47 µF).

6.3.6 - Setting the current loop gain

In most cases, the current loop functions correctly with R112 at its central position. Use a storage oscilloscope to obtain a more accurate setting.
In this case :
. disconnect the excitation on the alternative side,
. link TP1/6 with an oscilloscope path,
. set the ramps to minimum.
TURN POWER ON and start operation. Apply a speed index to J1-25. Adjust R112 to obtain a current rise of about 8 arches

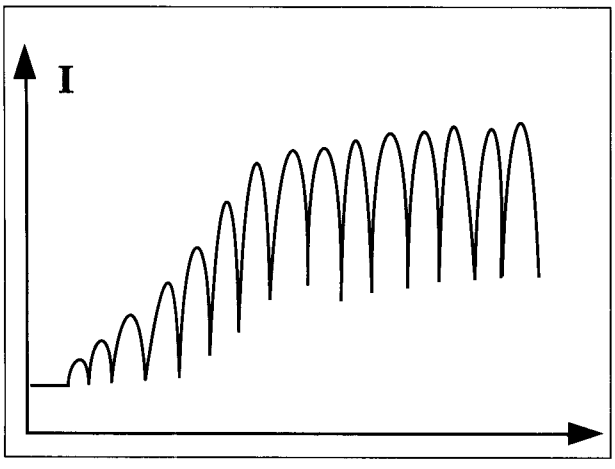

TURN POWER OFF and reconnect excitation power.

6.3.7 - Specific applications

- Setting the current limitation for applications requiring a long, strong torque on starting
(eg. : Extruder).
The VTU.N allows a 1.6 In control overcurrent for only 10 seconds. For such special applications, remove the safety device (time-based overload) by opening S5/1 on the 1215 board and recalibrate the controller.
The table below gives speed controller selections and adjustments based on the rated motor caliber.

rated motor I	Caliber of VTU.N selected	Max. I set on the VTU.N
10 → 30A	38A	16 → 46A
31 → 55A	70A	50 → 85A
56 → 90A	110A	90 → 132A
91 → 130A	170A	140 → 204A
131 → 230A	300A	210 → 360A
231 → 320A	420A	370 → 504A
321 → 450A	600A	513 → 720A
451 → 680A	900A	725 → 1080A
681 → 900A	1200A	1090 → 1440A

Eg. : For a motor with a rated current of 70A, select a VTU.N of 110A and set the limitation current at 1.6 x 70A = 112A.

- Setting the limitation current
Disconnect the excitation power on the alternative side (FL1, FL2).
TURN POWER ON and start operation.
Display a speed index at J1-25 of more than 5 V.
The speed controller will set a limitation current at 1.6 In.
With R110, adjust the value read on an ammeter or a shunt to 1.6 times the rated motor current.
Respect the maximum values given in the table above.
TURN POWER OFF and open S5/1 on the 1215 board.

7.-OPTIONS

7.1 - TEST BOX

Sockets for oscilloscope leads (2.5V max.)

A test box (optional) can be connected directly to the unit (TP1) and allows easy adjustments and simple diagnoses.

ADDRESS	CONTROLLER CONNECTOR PIN N°	FUNCTION	VALUE A ± 5%
1	TP1/15	Thyristors control	0 - +11V for controller 1.6 In
2	TP1/13	Linearisation loop input	0 - + 6V for controller 1.6 In.
3	TP1/11	Speed corrector output	0 - + 8.1V for controller 1.6 In.
4	TP1/9	Current amplifier output	0 - + 5.1V for controller In.
5	TP1/7	Speed image	0 - -10V for max controller N
6	TP1/5	Back EMF image.	0 -11V for rated U. (armature)
7	TP1/3	Internal power supply	-15V
8	TP1/1	Speed ref. ramp output plug	0 - +10V
9	TP1/2	Linearisation derivative amplifier output	0 - -11V for controller max. N 1.6 In
10	TP1/4	Internal power supply	+15V
11	TP1/6	Controller current image	0 - - 8.1V for controller 1.6 In
12	TP1/8	Common	0V
13	TP1/10	Current loop input	0 - + 8.1V for controlled 1.6 In and R110 at limit (clockwise)
14	TP1/12	DC tachometer (DT) return	3V for 60V DT return.
15	TP1/14	Controller data locking	Locked = 0 Unlocked = + 7V
16	TP1/16	Additional input current	0 - + 6.6V for controlled In (Voltage to apply)

7.2 - 1291 BOARD

7.2.1 - Presentation

The optional board 1291, in conjunction with a one-way, three-phase VTU.N speed controller for DC motors, allows the following operations :
- Speed reference input 0-16 mA. 0-20 mA and 4-20 mA isolated.
- Speed reference input 0/10V isolated.

The galvanic insulation function is carried out by two opto-couplers and power voltage setting on the board.

7.2.2 - Installation and connection

(See Fig. 1 and 2)
The optional board 1291 fits easily to the mother board 1214 by means of a fast snap-on nylon sleeve.
The connector J1 on the 1291 board is linked to connector J4 on the 1215 board by means of a ribbon cable.
The connector J2 on the 1291 board is linked to connector J16 on the 1210 board.
48 V alternating supply.
Switch S1 on board 1291 must be in position :
- 1, for a speed reference in voltage.
- 2, for a speed reference in current.

Note : switch S1 on board 1215 must be set to position 2.

Connection diagram

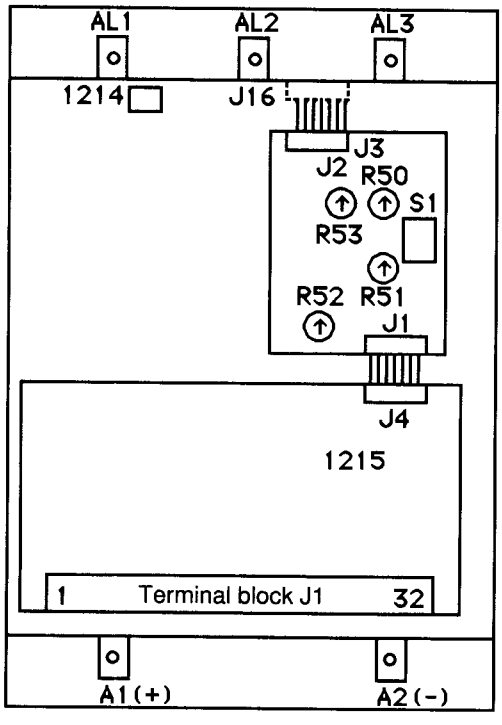

Fig. 1

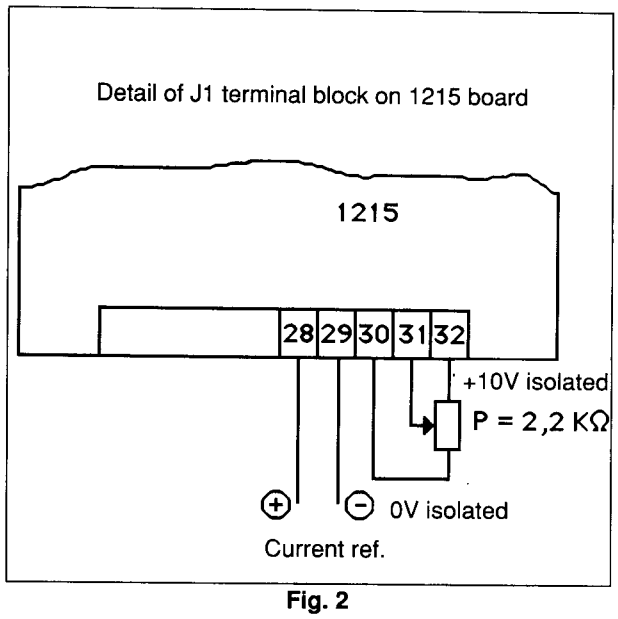

Fig. 2

7.2.3 - Settings

Switch S1 selects speed references.
- voltage speed reference.

For a speed reference of 0 - 10V isolated voltage, S1 must be at position 1.
Put a jumper between J1-3 and J1-2, and set the 0V on output (J1-6, J1-5) with R52.
Put a jumper between J1-1 and J1-2, and set the + 10V on output (J1-6, J1-5) with R52.
- Speed reference in current : 0-16 mA ; 0-20 mA ; 4-20 mA.

. First, set the speed reference at 0-10V isolated voltage as indicated above and set S1 and S2 to position 2.
. Indices 0-16 mA or 0-20 mA.
Set for 16 mA or 20 mA 10V between TP/8 and J1, 3 (0V on output).
. Index 4-20 mA.
Set for 20 mA 12.5V between TP1/8 and J1-3 by R50.
Put S2 in position 1.
Set for 4 mA, 0V between TP1/8 and J1-3 by R51.

NOTE :
- for 0-16 mA and 0-20 mA, S2 in position 2.
- for 4-20 mA, S2 in position 1.
- polarity of the current reference signal.

terminal 29 (1215 board) negative polarity.
terminal 28 (1215 board) positive polarity.

7.2.4 - Installation of components

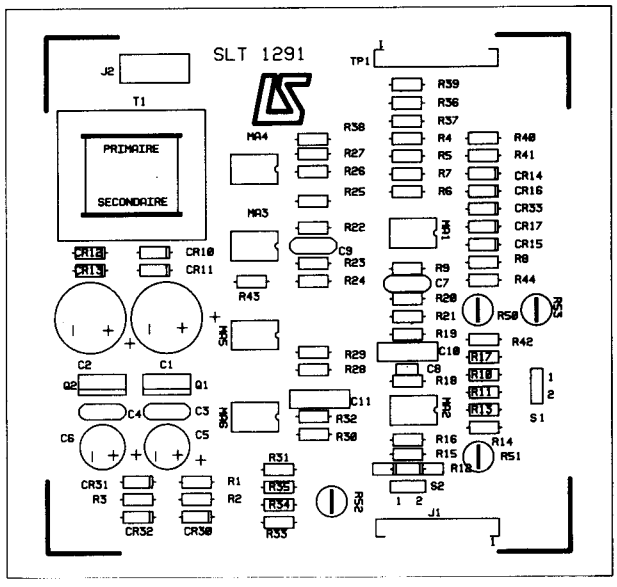

7.2.5 - Block diagram

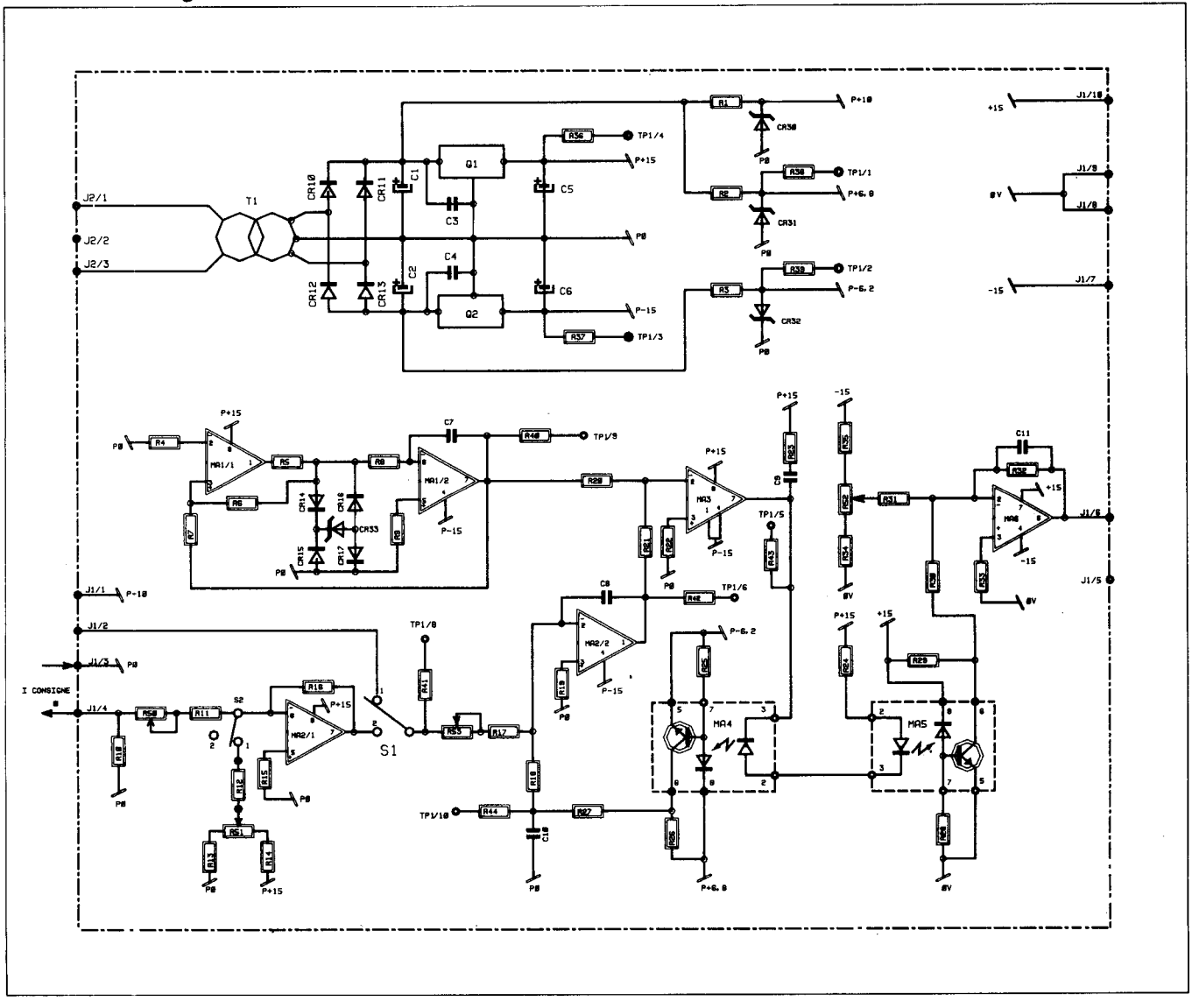

7.3 - 1292 BOARD

7.3.1 - Presentation

The optional board 1292, in conjunction with a one-way, three-phase VTU.N speed controller for DC motors, allows the following operations :
- DC tachometer (DT) breakdown safety device. CR 20 signal lamp.
- Motor overheat safety device. CR21 signal lamp,
- Anti-stall safety device,
- Null speed indicator relay,
- Motor couple indicator relay (I threshold),
- Motor speed image by 0 to 10V signal.

All three safety devices lock the VTU.N speed controller if the anti-stall safety device is activated. CR55 lights up. If one of the two safety devices, DT failure or motor overheat, is activated, CR56 lights up.
The null speed and motor torque warning functions deliver opening and closing contacts for use in signalling or remote control.
WARNING : with option 1292, the galvanic insulation between the electronic and power sections is brought down to a value of 1 MΩ.

7.3.2 - Installation and connection

(See Fig. 1 and 2)
The optional board 1292 fits quickly and easily to the mother board 1214 by means of a snap-on nylon sleeve.
The connector J1 on the 1292 board is linked to connector J2 on the 1215 board by means of the ribbon cable provided. It sends the null speed signal relay contacts (1292 board) to the J1 terminal block on the 1215 board (terminals 1,2,3).
The connector J2 on the 1292 board is linked to connector J2 on the 1214 board by means of the ribbon cable.
The J4 terminal block allows the K2 relay contacts to be used for signalling motor load (terminals 1,2,3), speed image output (terminals 4 and 5) and connection of the CTP sensor of the motor (6 and 7)
Contact cut-out power : 250 V AC - 2,5A
Cos φ = 0,5.

Connection diagram

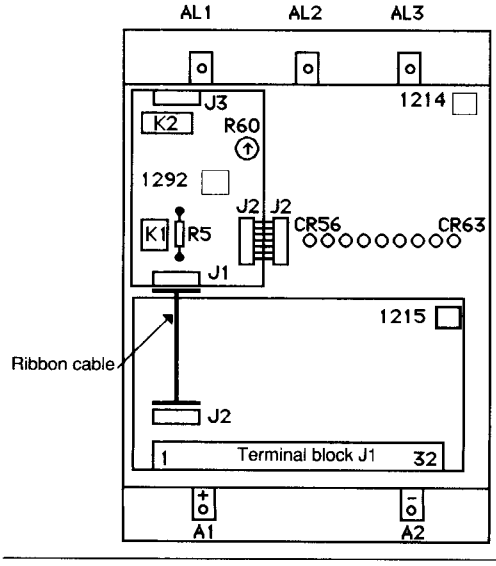

Fig. 1

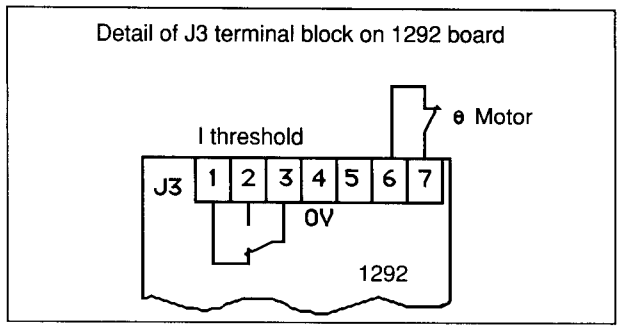

Fig. 2

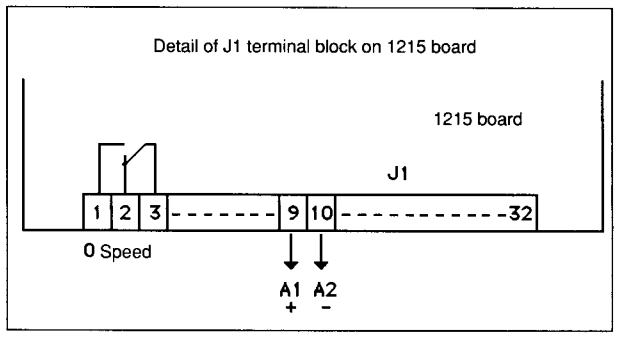

Fig. 3

7.3.3 - Settings- Selecting functions

- Switch S1 selects the DT failure function.
It is activated when S1, is at the ON position (CR20 lights up if there is a fault).
Note : terminal A1 (+) must be connected to terminal 9 of J1 (1215 board) and terminal A2 (-) connected to terminal 10 of J1 (1215 board).
Switches S3 and S1 select the motor overheat function. This is active when both switches are at the ON position (CR21 lights up in case of a fault). If the motor sensor is not in use, set S3 to OFF.
- Set the S2 switch to the ON position to activate the motor anti-stall function.
Motor torque signal relay (I threshold).
When the power used by the motor exceeds the threshold, the K2 relay is called. Contacts 1,2,3 of the J3 terminal block are used.
The threshold is adjusted by the R60 potentiometer.
When R60 is at minimum, the current threshold corresponds to 20 % of the maximum speed controller I.
With R60 at maximum, the current threshold corresponds to 140 % of the maximum speed controller I.
- Null speed signal relay.
The K1 relay is activated when the motor is running and is at rest when the motor stops.
- Null speed is adjusted by the R5 resistor on bars.
- Contacts used : terminals 1,2,3 of the J1 terminal block on the 1215 board.
- Motor speed image.
- Terminals J3-4 and J3-5 of the 1292 board give a voltage proportional to the motor speed (10V corresponds to the maximum speed set).

7.3.4 - Installation of components

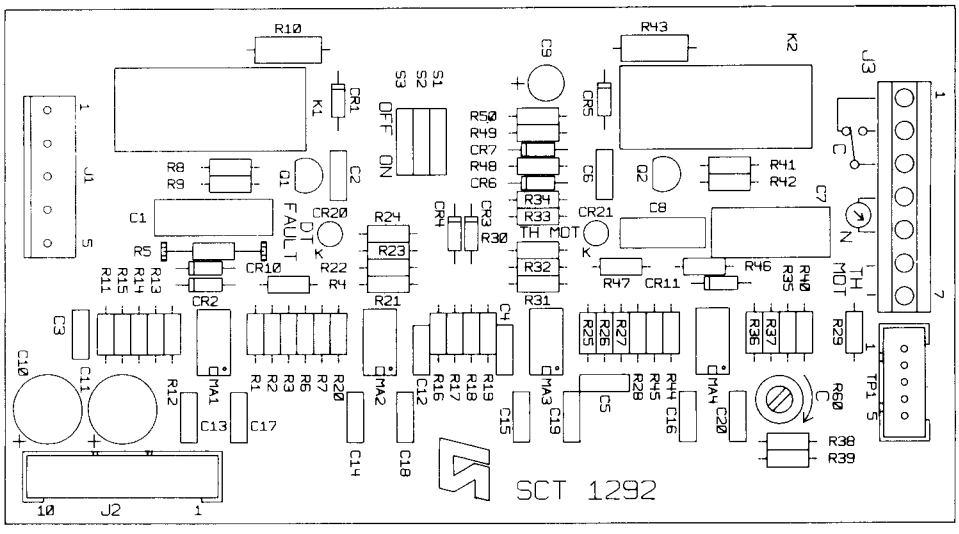

7.3.5 - Block diagram

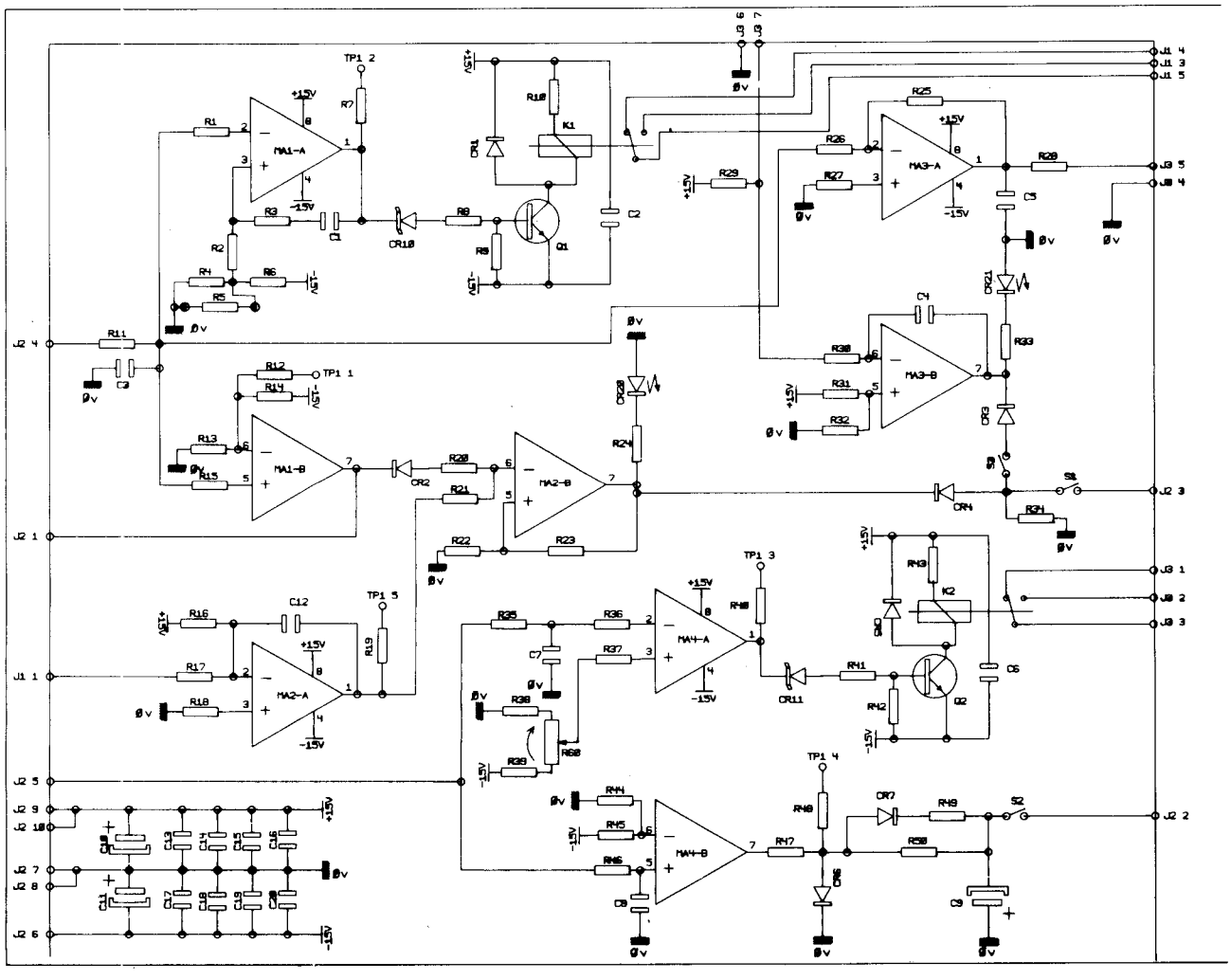

8.- SPARE SPARTS

WARNING : Turn off the power to the unit before attempting any type of servicing inside the speed controller

- Never disconnect a cable before properly identifying it.
- Ensure that the connectors cannot be interchanged.
- Check that the spare board bears the same markings as the original board and the same setting values.
- Check switch positions.
- Before restoring power, check that the unit is properly connected.

8.1 - BOARDS

DESCRIPTION	USE	CODE	TYPE	Qty
POWER BOARD	2.38	PEF. 210 CB 001	CSD 1210 B1/A	1
	3.38	PEF. 210 CB 005	CSD 1210 B1/B	1
	4.38	PEF. 210 CB 009	CSD 1210 B1/C	1
	2.75	PEF. 210 CB 002	CSD 1210 B1/D	1
	3.75	PEF. 210 CB 006	CSD 1210 B1/E	1
	4.75	PEF. 210 CB 010	CSD 1210 B1/F	1
	2.110	PEF. 210 CB 003	CSD 1210 B1/G	1
	3.110	PEF. 210 CB 007	CSD 1210 B1/H	1
	4.110	PEF. 210 CB 011	CSD 1210 B1/J	1
	2.170	PEF. 210 CB 004	CSD 1210 B1/K	1
	3.170	PEF. 210 CB 008	CSD 1210 B1/L	1
	4.170	PEF. 210 CB 012	CSD 1210 B1/M	1
	2.300	PEF. 210 CB 013	CSD 1210 B1/N	1
	3.300	PEF. 210 CB 014	CSD 1210 B1/P	1
	4.300	PEF. 210 CB 015	CSD 1210 B1/Q	1
	2.420	PEF. 210 CB 016	CSD 1210 B1/R	1
	3.420	PEF. 210 CB 017	CSD 1210 B1/S	1
	4.420	PEF. 210 CB 018	CSD 1210 B1/T	1
	2.600	PEF. 210 CB 019	CSD 1210 B1/U-A	1
	3.600	PEF. 210 CB 020	CSD 1210 B1/V-A	1
	4.600	PEF. 210 CB 021	CSD 1210 B1/W-A	1
	2.900	PEF. 210 CB 019	CSD 1210 B1/U-B	1
	3.900	PEF. 210 CB 020	CSD 1210 B1/V-B	1
	4.900	PEF. 210 CB 021	CSD 1210 B1/W-B	1
	2.1200	PEF. 210 CB 019	CSD 1210 B1/U-C	1
	3.1200	PEF. 210 CB 020	CSD 1210 B1/V-C	1
	4.1200	PEF. 210 CB 021	CSD 1210 B1/W-C	1
MOTHER BOARD	VTU.N 38A to 1200A	PEF. 214 CB 000	CMD 1214 B1/A	1
PERSONALISATION BOARD	VTU.N 38A to 1200A	PEF. 215 CB 000	CPR 1215 B1/A	1
RC SUPPORT BOARD	VTU.N 3300A	PEF. 365 CB 000	SCR 1365 A1/B	1
	VTU.N 3420A	PEF. 309 CB 000	SCR 1309 A1/A	1
TEST BOARD	VTU.N 38A to 1200A	PEF. 282 CB 000	CTC 1282 A4/A	1
OPTION BOARD	VTU.N 38A to 1200A	PEF. 291 CB 000	SLT 1291 A2/A	1
	VTU.N 38A to 1200A	PEF. 292 CB 000	SCT 1292 A3/A	1

8.2 - POWER THYRISTOR

DESCRIPTION	CODE	TYPE	QUANTITY
VTU.N 2-38	ESC 025 MT 001	SKKT 26/12 D	3
VTU.N 3-38	ESC 026 MT 000	SKKT 26/14 D	3
VTU.N 4-38	ESC 026 MT 001	SKKT 26/16 D	3
VTU.N 2-75	ESC 071 MT 001	SKKT 71/08 D	3
VTU.N 3-75	ESC 071 MT 000	SKKT 71/14 D	3
VTU.N 4-75	ESC 071 MT 002	SKKT 71/16 D	3
VTU.N 2-110	ESC 056 MT 001	SKKT 56/08 D	3
VTU.N 3-110	ESC 056 MT 000	SKKT 56/14 D	3
VTU.N 4-110	ESC 056 MT 002	SKKT 56/16 D	3
VTU.N 2-170	ESC 091 MT 001	SKKT 91/08 D	3
VTU.N 3-170	ESC 091 MT 000	SKKT 91/14 D	3
VTU.N 4-170	ESC 091 MT 002	SKKT 91/16 D	3
VTU.N 2-300	ESC 131 MT 002	SKKT 131/08 D	3
VTU.N 3-300	ESC 131 MT 000	SKKT 131/14 D	3
VTU.N 4-300	ESC 131 MT 001	SKKT 131/16 D	3
VTU.N 2-420	ESC 210 MT 002	SKKT 210/08 D	3
VTU.N 3-420	ESC 210 MT 000	SKKT 210/14 D	3
VTU.N 4-420	ESC 210 MT 001	SKKT 210/16 D	3
VTU.N 3-600	ESC 490 ET 000	SKT 490/12 D + RD	6
VTU.N 4-600	DEVELOPMENT IN PROGRESS		
VTU.N 3-900	ESC 760 ET 000	SKT 760/12 D + RD	6
VTU.N 4-900	DEVELOPMENT IN PROGRESS		
VTU.N 3-1200	ESC 999 ET 000	SKT 1200/12 D + RD	6
VTU.N 4-1200	DEVELOPMENT IN PROGRESS		

8.3 - MOTOR EXCITATION RECTIFIER BRIDGE

DESCRIPTION	CODE	TYPE	QUANTITY
VTU.N 38A to 420A	ESC 015 MD 000	26 MB 100A	1
VTU.N 600A to 1200A	ESC 030 MP 000	SKB 30/12 + RD	1

8.4 - LOW CURRENT FUSES

DESCRIPTION	USE	CODE	TYPE	Qty
ELECTRONIC SUPPLY FUSES	VTU.N 38A to 1200A	PEL 000-FU 004	6 x 32 - 0.315A	2
EXCITATION PROTECTION FUSES	VTU.N 38A to 110A	PEL 020-FU 004	6 x 32 - RAP 20A	1
	VTU.N 170A to 1200A	PEL 020-FA 001	10 x 38 - AM 20A	1

FUSES* UR (POWER)

DESCRIPTION	CODE	TYPE	QUANTITY
VTU.N 38	PEL 040 FU 002	BOD KC3 URGL 30 TtC.40	3
VTU.N 75	PEL 100 FU 001	BOD KC3 URGK 30 TtC.100	3
VTU.N 110	PEL 125 FU 000	BOD KC3 URGK 30 TtC.125	3
VTU.N 170	PEL 200 FU 000	BOD KC3 URGG 30 TtC.200	3
VTU.N 300	PEL 315 FU 000	BOD KC3 URGG 31 TtC.315	3
VTU.N 420	PEL 500 FU 000	BOD KCA URB 31 TtC.500	3
VTU.N 600	PEL 500 FU 000	BOD KCA URB 32 TtC.500	6
VTU.N 900	PEL 630 FU 000	BOD KCA URB 32 TtC.630	6
VTU.N 1200	PEL 800 FU 000	BOD KCA URB 32 TtC.800	6

* USE ADAPTOR AND MICRO-CONTACT WITH FUSES

8.5 - SELFS-INDUCTION PHASE COILS

DESCRIPTION	CODE	TYPE	QUANTITY
VTU.N 38	SEL 040 SM 000	SM 40-25µH 40 A	3
VTU.N 75	SEL 063 SM 000	SM 63-10µH 63 A	3
VTU.N 110	SEL 100 NT 000	3 ST 100-95µH 100A	1
VTU.N 170	SEL 140 NT 000	3 ST 140-68µH 140A	1
VTU.N 300	SEL 250 NT 000	3 ST 250-38µH 250A	1
VTU.N 420	SEL 330 NT 000	3 ST 330-29µH 330A	1
VTU.N 600	SEL 540 NT 000	3 ST 540-18µH 540A	1
VTU.N 900	SEL 740 NT 000	3 ST 740-13µH 740A	1
VTU.N 1200	EN COURS	3 ST 1150-8.3µH 1150A	1

APPENDIX : VTU.N DIAGRAM

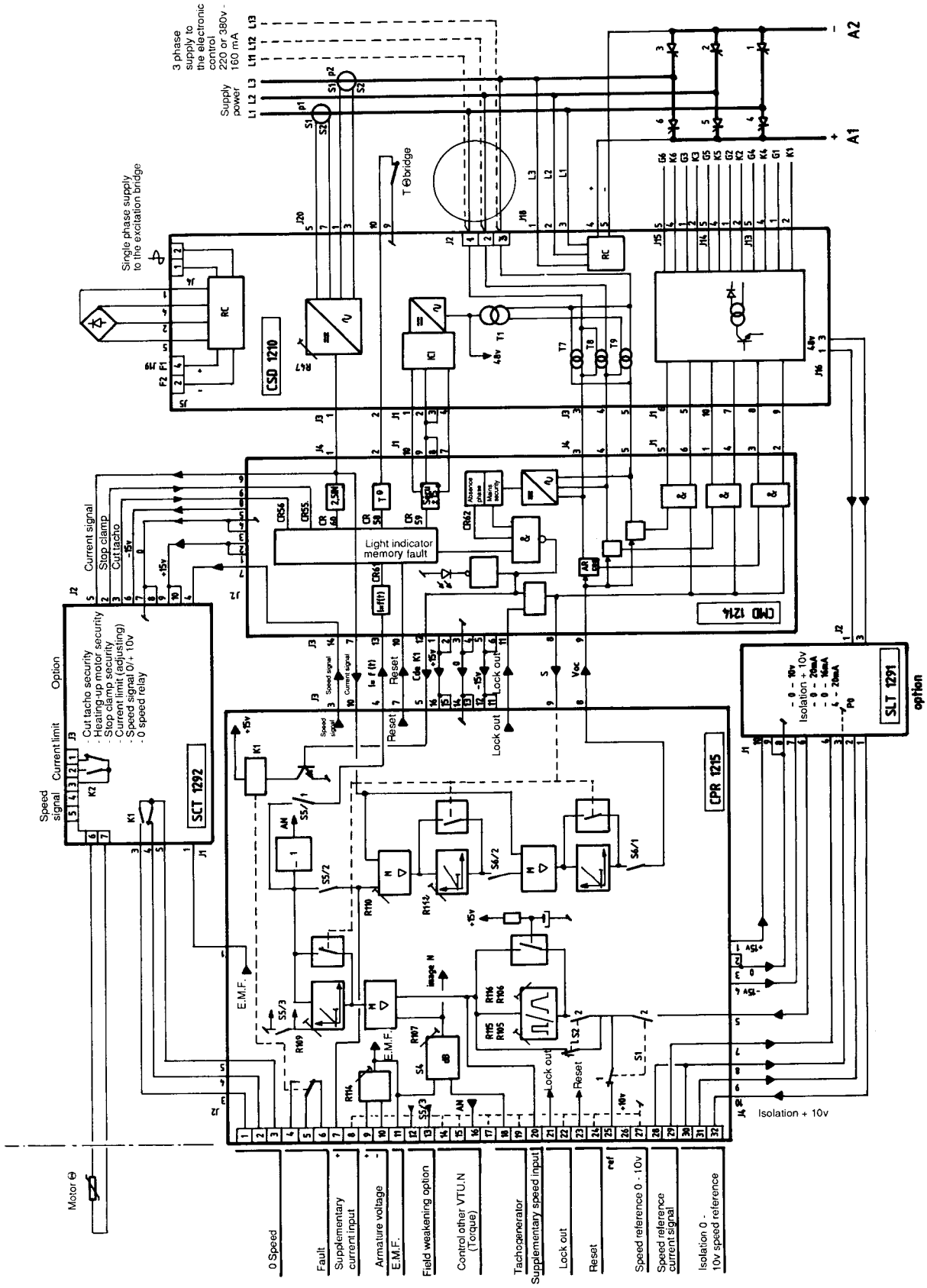

MOTEURS LEROY-SOMER - 16015 ANGOULEME CÉDEX - FRANCE

PLEASE CONTACT US AT :

Imprimerie MOTEURS LEROY-SOMER
RC ANGOULEME B 671 820 223