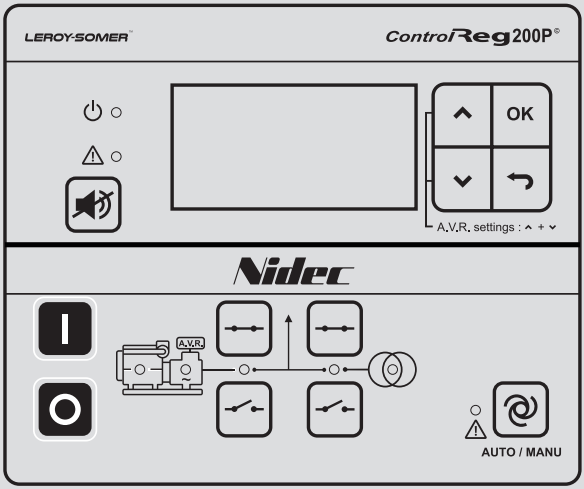

ControlReg200/ControlReg200P

Installation and maintenance

LEROY-SOMER™

Nidec
All for dreams

ControlReg200/ControlReg200P

This manual concerns the ControlReg series which you have just purchased.
We wish to draw your attention to the contents of this maintenance manual.

SAFETY MEASURES

Before using your ControlReg for the first time, it is important to read the whole of this installation and maintenance manual.

All necessary operations and interventions on this machine must be performed by a qualified technician.

Our technical support service will be pleased to provide any additional information you may require.

The various operations described in this manual are accompanied by recommendations or symbols to alert the user to potential risks of accidents. It is vital that you understand and take notice of the following warning symbols.

WARNING

Warning symbol for an operation capable of damaging or destroying the machine or surrounding equipment.

Warning symbol for general danger to personnel.

Warning symbol for electrical danger to personnel.

All servicing or repair operations performed on the ControlReg should be undertaken by personnel trained in the commissioning, servicing and maintenance of electrical and mechanical components.

WARNING

This ControlReg can be incorporated in a EC-marked machine.
This manual is to be given to the end user.

ControlReg200/ControlReg200P

CONTENTS

ControlReg200/ControlReg200P

1 - GENERAL INFORMATION

1.1 - About the technical manual

1.1.1 - General purpose

This technical manual mainly includes functional descriptions, presentation of display unit and menu structure, the procedure for parameter setup and reference to parameter lists.

The general purpose of this document is to provide useful overall information about the functionality of the controller and its applications. This document also offers the user the information he needs in order to successfully set up the parameters needed in his specific application.

Please make sure to read this document before starting to work with the controller and the genset to be controlled. Failure to do this could result in human injury or damage to the equipment.

1.1.2 - Intended users

This Designer's Reference Handbook is mainly intended for the panel builder designer in charge. On the basis of this document, the panel builder designer will give the electrician the information he needs in order to install the unit, e.g. detailed electrical drawings. In some cases, the electrician may use these installation instructions himself.

1.1.3 - Contents and overall structure

This document is divided into chapters, and in order to make the structure simple and easy to use, each chapter will begin from the top of a new page.

2 - GENERAL PRODUCT INFORMATION

2.1 - Introduction

This chapter will deal with LS ControlReg series which is a combined solution integrating a genset controller and a generator voltage regulator. It is a cost-effective and compact product.

2.2 - Type of product

The ControlReg is a micro-processor based control unit containing all necessary functions for protection and control of a genset.
It contains all necessary 3-phase measuring circuits, and all values and alarms are presented on the LCD display.

The ControlReg will come in two different variants:
ControlReg200 and ControlReg200P.

The ControlReg200 is the unit that is able to perform auto start, and the ControlReg200P is able to make the automatic mains failure (AMF) sequences. The hardware for the two products is different, therefore some of the sequences described in this document are only relevant to one of the variants. You will find a detailed description of the available functions in each product in the chapter «Standard Functions».

For detailed specifications of the hardware, please refer to the datasheet.

2.3 - PC utility software warning

2.3.1 - PC USW warning

It is possible to remote-control the genset from the PC utility software. To avoid personal injury, make sure that it is safe to remote-control the genset.

LEROY-SOMER do not recommend to use the USB as the primary power supply for the unit.

2.3.2 - USB powered mode

It is possible to power the ControlReg200 only with the USB-cable. However, only the communication to the PC tool «USW» will be possible, when USB is the only source of power. It will not be possible to operate the unit from the display.

The power gathered by the USB is not enough for the complete unit to work properly and the AC measurements will not be accurate. Therefore the HW is not usable.

The USB powered mode can be used for setting up the controller with the USW. It is possible to flash the controller with application software, perform a batch-load, change the parameters and translations and configure Mlogic.

The unit will display a view automatically which says «USB powered, limited functionality» and it will remain there as long as there is no proper power on term. 1 & 2.

For the USW, a banner saying «USB powered» will appear in the lower right corner. This indicates that all the AC measurements, seen on the USW, are not reliable. See below picture:

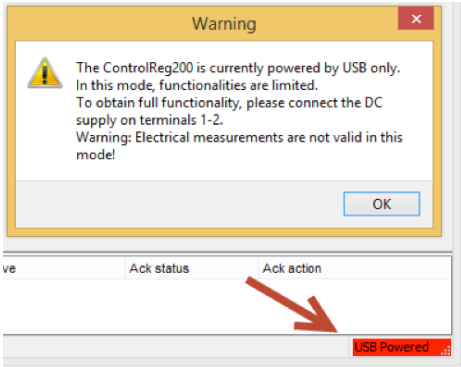

2.3.3 - Parameter change while engine running

Due to the critical behavior that can be seen if some of the parameters are changed while engine is running, it is not authorized to change the following parameters unless the engine is stopped.

Trying to do this, both the display and the USW will pop-up a message indicating that the action is not allowed. The writing of the parameter is therefore not taken into consideration.

Parameters which cannot be changed while the engine is running are the AVR settings (except voltage level), AC configuration and multi input settings. The affected parameters are located in the menus in below table.

Name	Menus
AVR settings	2500 and 2600
AC configuration	9130
Multi input settings	10460, 10630, 10800, 10980, 10990, 11000, 11010, 11020, 11030, 11150, 11160, 11080, 11300, 11310, 11320, 11330, 11340, 11350

3 - PASSWORDS

3.1 - Passwords and parameter access

3.1.1 - Password

The unit includes three password levels. All levels can be adjusted in the PC software.

Available password levels:

Password level	Factory setting	Access		
		Customer	Service	Master
Customer	2000	X		
Service	2001	X	X	
Master	2002	X	X	X

A parameter cannot be entered with a password that is ranking too low. But the settings can be displayed without password entry.

Each parameter can be protected by a specific password level. To do so, the PC utility software must be used. Enter the parameter to be configured and select the correct password level.

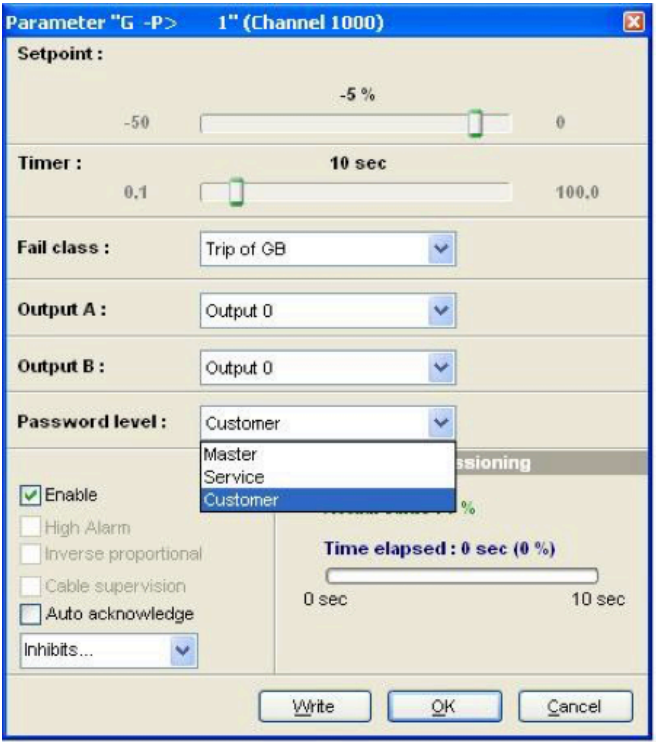

The password level can also be changed from the parameter view in the column «Level».

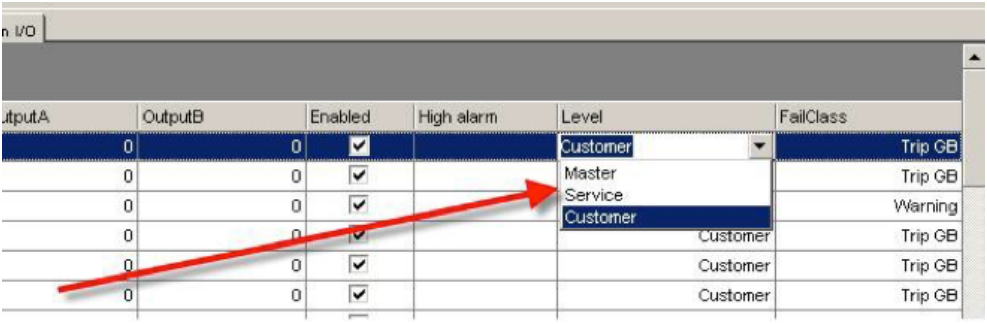

3.1.2 - Parameter access

To gain access to adjust the parameters, the password level must be entered:

If the password level is not entered, it is not possible to enter the parameters.

The customer password can be changed in jump menu 9116. The service password can be changed in jump menu 9117. The master password can be changed in jump menu 9118.

The factory passwords must be changed if the operator of the genset is not allowed to change the parameters.

It is not possible to change the password at a higher level than the password entered.

4 - FUNCTIONAL DESCRIPTIONS

4.1 - Standard functions

4.1.1 - Standard functions

This section includes functional descriptions of standard functions as well as illustrations of the relevant application types. Flowcharts and single-line diagrams will be used in order to simplify the information.

The standard functions are listed in the following paragraphs.

The table below describes the genset modes that are available, depending on the variant of the ControlReg to be used.

Application	Comment
Automatic Mains Failure (AMF) (no back sync.)	ControlReg200P
Island operation	ControlReg200/ControlReg200P
Load takeover	ControlReg200P

On the hardware point of view, the ControlReg200 has a lighter specification than the ControlReg200P.

The table below describes which points differ from each other.

Feature (terminal numbers)	Available on ControlReg200	Available on ControlReg200P
Mains measurement (term. 21 to 24)	No	Yes

4.1.2 - Operation modes

- Automatic Mains Failure
- Island operation
- Load takeover

4.1.3 - Engine control

- Start/stop sequences
- Run and stop coil

4.1.4 - Generator protection (ANSI)

- Reverse power (32)
- 2 x overload (32)
- 4 x overcurrent (50)
- 2 x overvoltage (59)
- 2 x undervoltage (27)
- 2 x over-/underfrequency (81)
- Current/voltage unbalance (60)
- Loss of excitation / overexcitation (40/32RV)
- Multi-inputs (digital, 4-20 mA, Pt100, Pt1000 or RMI)
- Digital inputs

4.1.5 - Busbar protection (ANSI)

- 2 x over-voltage (59)
- 2 x under-voltage (27)
- 2 x over-frequency (81)
- 2 x under-frequency (81)
- Voltage unbalance (60)

The busbar protections are only available for ControlReg200P.

4.1.6 - Display

- Status texts
- Push-buttons for start and stop
- Push-buttons for breaker operations
- Push-button for Mute/Access to Alarms and Events
- Push-buttons for navigating the menus
- Push-button for switching between MAN/AUTO
- Push-button for viewing alarms and silencing alarm horn

4.1.7 - Event and alarm logs

The controller is saving information about the latest events and alarms. The information is gathered in the «Event log» or the «Alarm log», both are containing up to 50 logs each.

The date and time has to be updated for correct time stamp on the logs.

4.1.8 - M-Logic

- Simple logic configuration tool
- Selectable input events
- Selectable output commands

4.2 - Measurement systems

In menu 9130, the measurement principle can be changed between three-phase and single phase.

Configure the ControlReg to match the correct measuring system. When in doubt, contact the switchboard manufacturer for information about the required adjustment.

4.2.1 - Single phase system

The single phase system consists of one phase and the neutral.

The following adjustments must be made to make the system ready for the single phase measuring (example 230V AC):

Setting	Adjustment	Description	Adjust to value
6004	G nom. voltage	Phase-neutral voltage of the generator	230V AC
6041	G transformer	Primary voltage of the G voltage transformer (if installed)	U_{NOM} x √3
6042	G transformer	Secondary voltage of the G voltage transformer (if installed)	U_{NOM} x √3
6051	BB transformer	Primary voltage of the BB voltage transformer (if installed)	U_{NOM} x √3
6052	BB transformer	Secondary voltage of the BB voltage transformer (if installed)	U_{NOM} x √3
6053	BB nom. voltage	Phase-phase voltage of the busbar	U_{NOM} x √3

The voltage alarms refer to U_{NOM} (230V AC).

The ControlReg200P has two sets of BB transformer settings, which can be enabled individually in this measurement system.

4.2.2 - Three-phase system

When the ControlReg is delivered from the factory, the three-phase system is selected. When this principle is used, all three phases must be connected to the controller.

The following adjustments must be made to make the system ready for the three-phase measuring (example 400/230V AC):

Setting	Adjustment	Description	Adjust to value
6004	G nom. voltage	Phase-neutral voltage of the generator	400V AC
6041	G transformer	Primary voltage of the G voltage transformer (if installed)	U_{NOM}
6042	G transformer	Secondary voltage of the G voltage transformer (if installed)	U_{NOM}
6051	BB transformer	Primary voltage of the BB voltage transformer (if installed)	U_{NOM}
6052	BB transformer	Secondary voltage of the BB voltage transformer (if installed)	U_{NOM}
6053	BB nom. voltage	Phase-phase voltage of the busbar	U_{NOM}

The ControlReg200P has two sets of BB transformer settings, which can be enabled individually in this measurement system.

4.3 - Applications

4.3.1 - Applications and genset modes

This section about applications is to be used for reference using the particular genset mode as starting point. It is not suitable for reading from beginning to end.

The unit can be used for the applications listed in the table below.

Application	Comment
Automatic Mains Failure (no back sync.)	ControlReg200P
Island operation	ControlReg200/ControlReg200P
Load takeover	ControlReg200P
Power management	Not available

Genset mode	Running mode			
	Auto	Test	Man	Block
Automatic Mains Failure (no back sync.)	X	X	X	X
Island operation	X	X	X	X
Load takeover	X	X	X	X

For a general description of the available running modes, please refer to the chapter «Running mode description».

4.3.2 - Application design

The application is designed through the utility software. Please select «Application configuration».

Select a new application and adjust the settings in this dialogue box.
The product will be automatically selected if you are currently connected to the unit when doing this configuration.
When using the ControlReg, the plant type will be stuck to «Single DG». This means no CAN communication can be established with other units (No power management).
The active choice we can make here is the name of the application. If «active» is ticked, the name is used when making batch-files.
Using the ControlReg, only one application will be available.

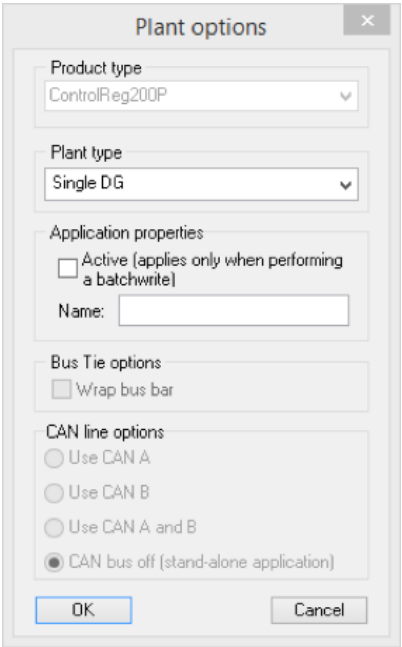

Now the application can be designed using the section control panel.

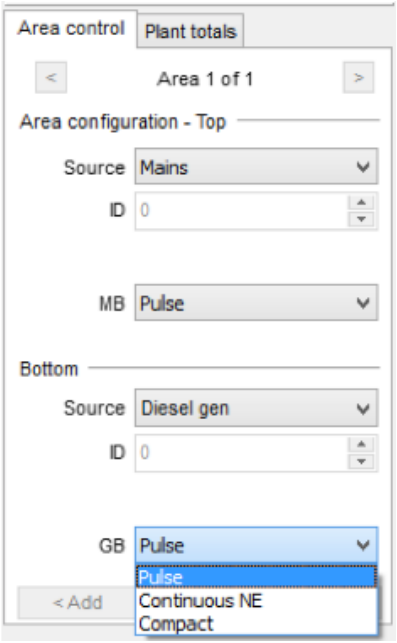

For each area, it is defined whether a generator and a mains are present, and the number and type of breakers.

If a ControlReg is connected, it will not be possible to draw an application with a mains or a mains breaker (only possible with ControlReg200P).

This application configuration setup is here to give the user the choice of which breaker type is in use. The possible choice of breakers are «pulse», «Continuous NE» or «Compact».

4.3.3 - AMF (no back synchronisation)

Auto mode description
The unit automatically starts the genset and switches to generator supply at a mains failure after an adjustable delay time. It is possible to adjust the unit to change to genset operation in two different ways:

1. The mains breaker will be opened at genset start-up.

2. The mains breaker will remain closed until the genset is running, and the genset voltage and frequency is OK.
In both cases, the generator breaker will be closed when the generator voltage and frequency is OK, and the mains breaker is open. When the mains returns, the unit will switch back to mains supply and cool down and stop the genset. The switching back to mains supply is done when the adjusted «Mains OK delay» has expired.
For a general description of the available running modes, please refer to the chapter «Running mode description».

4.3.4 - Island operation

Auto mode description
The unit automatically starts the genset and closes the generator breaker at a digital start command. When the stop command is given, the generator breaker is tripped, and the genset will be stopped after a cooling down period. The start and stop commands are used by activating and deactivating a multi input set to «binary» or with the time-dependent start/stop commands. If the time-dependent start/stop commands are to be used, the auto mode must also be used.
For a general description of the available running modes, please refer to the chapter «Running mode description».

4.3.5 - Load takeover

Auto mode description
The purpose of the load takeover mode is to transfer the load imported from the mains to the genset for operation on generator supply.
The unit automatically starts the genset and closes the generator breaker at a digital start command. When the stop command is given, the generator breaker is tripped, and the genset will be stopped after a cooling-down period. The start and stop commands are used by activating and deactivating a multi input set to «binary» or with the time-dependent start/stop commands. If the time-dependent start/stop commands are to be used, then the auto mode must also be used.

4.4 - Running mode description

4.4.1 - Manual mode

The unit can be operated in manual mode (MAN). Manual means that the unit will not initiate any sequences automatically, as is the case with the auto mode. It will only initiate sequences, if external signals are given.
An external signal may be given in three ways:
1. Display push-buttons are used.
2. A multi input set to «binary» is used.
3. Modbus commands are given at service port.
The following sequences can be activated in manual mode:

Command	Description	Comment
Start	The start sequence is initiated and continues until the genset starts or the maximum number of start attempts has been reached. If Hz/V OK, the GB is ready to close.	
Stop	The genset will be stopped. After disappearance of the running signal, the stop sequence will continue to be active in the '"extended stop time" period. The genset is stopped with cooling down time.	The cooling down time is cancelled if the stop button is activated twice.
Close GB	The unit will close the generator breaker if the mains breaker is open.	
Open GB	The unit will open the generator breaker instantly.	
Close MB	The unit will close the mains breaker if the generator breaker is open.	
Open MB	The unit opens the mains breaker instantly.	

Manual mode does not influence voltage regulation in ControlReg products.

4.4.2 - Test mode

The test mode function is activated by activating a multi input set to «binary», and assigned to TEST mode functionality. The TEST mode can also be activated by use of the USW, when connected to the unit over USB.
The settings for the test function are set up in menu 7040.

7040 Test
- Timer: Period starts when U/f is ok. Engine stops when time runs out.
- Return: When the test is completed, the unit will return to the selected mode (manual or auto).

If the timer in parameter 7041 is set to 0.0 min., the test sequence will be infinite.

The test will be canceled by deactivating the input or changing mode to either manual or auto.

4.4.3 - Test

The test will start the genset, open the mains breaker, if present, and close the generator breaker. When the test timer expires or the test is cancelled by mode change, the generator breaker is opened, the mains breaker closed, if present, and the generator is stopped after the cooling down time.

It is possible to open and close the generator breaker and the mains breaker in manual mode.

4.4.4 - Block mode

Block mode can be enabled by pressing the STOP-button together with the AUTO-button for more than 1 second, alternatively with M-Logic or a binary input. When block mode is selected, the controller will be locked for certain actions. This means that it cannot start the genset or perform any breaker operations from the buttons.
The purpose of the block mode is to make sure that the genset does not start for instance during maintenance work.

It is important to know that the binary input configured to block mode is a constant signal. So, when it is ON, the unit is in a blocked state, and when it is OFF, it returns to the mode it was in before block mode was selected.

When controller goes into block mode, it will:

- open GB, shut down the engine, show «BLOCK» in the display and flash the AUTO-LED.

- GB ON, GB OFF, MB ON, MB OFF and START buttons are locked.

If block mode is selected using the display, the block mode can only be deactivated from the display. If block mode is selected using the digital input, the block mode can only be deactivated by setting the digital input to OFF. If block mode has been activated in both ways, it has to be deactivated with both ways of doing it.

Before the running mode is changed, it is important to check that persons are clear of the genset and that the genset is ready for operation.

Alarms are not influenced by block mode selection.

The genset will shut down if block mode is selected while the genset is running.

4.5 - Single-line diagrams

4.5.1 - Application illustration

In the following, the various applications are illustrated in single-line diagrams.

4.5.2 - Automatic Mains Failure

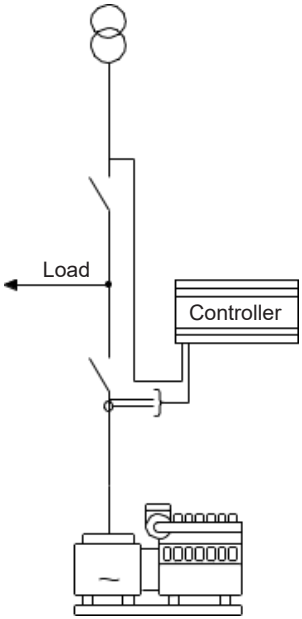

4.5.3 - Island operation

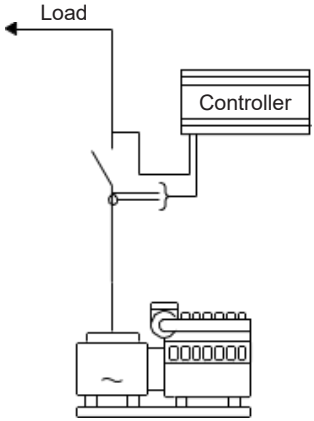

4.5.4 - Automatic Mains Failure

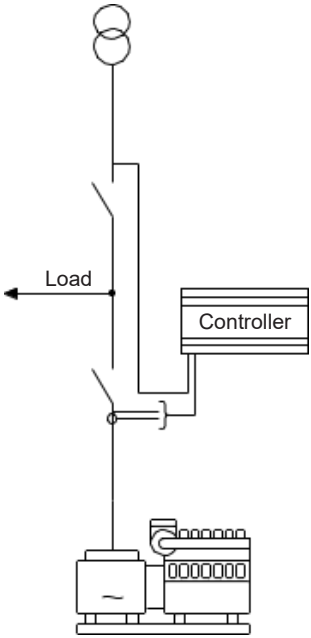

4.6 - Flowcharts

4.6.1 - Flowcharts

Using flowcharts, the principles of the most important functions will be illustrated in the next sections. The functions included are:

- Mode shift
- MB open sequence
- GB open sequence
- Stop sequence
- Start sequence
- MB close sequence
- GB close sequence
- Load takeover
- Island operation
- Automatic Mains Failure
- Test sequence

The flowcharts on the following pages are for guidance only. For illustrative purposes, the flowcharts are simplified in some extent.

4.6.2 - Mode shift

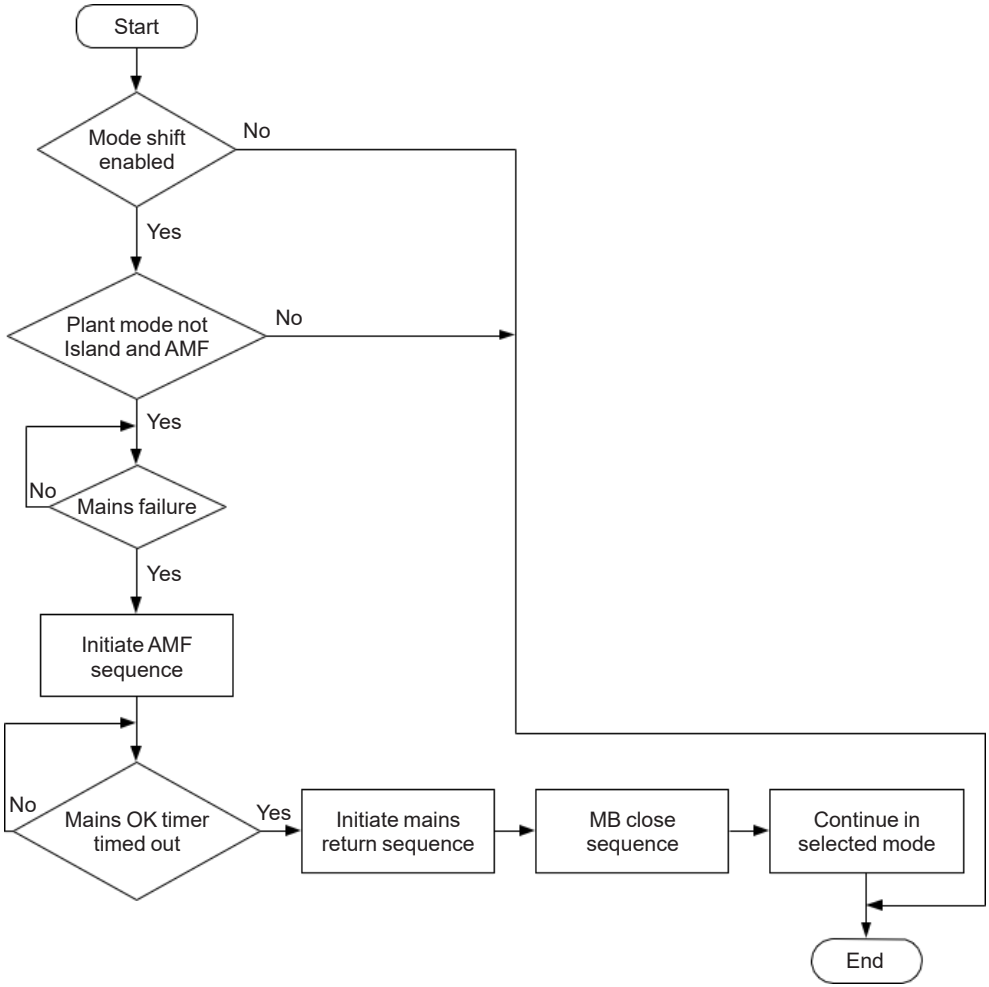

Mode shift is enabled in ch. 7081.

4.6.3 - MB open sequence

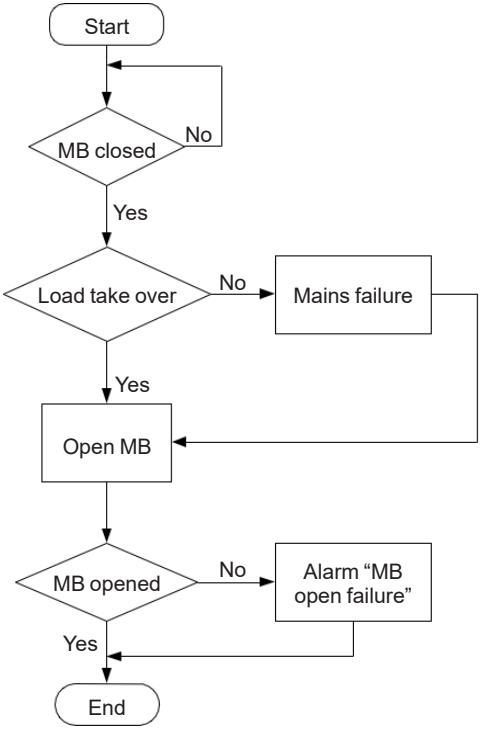

4.6.4 - GB open sequence

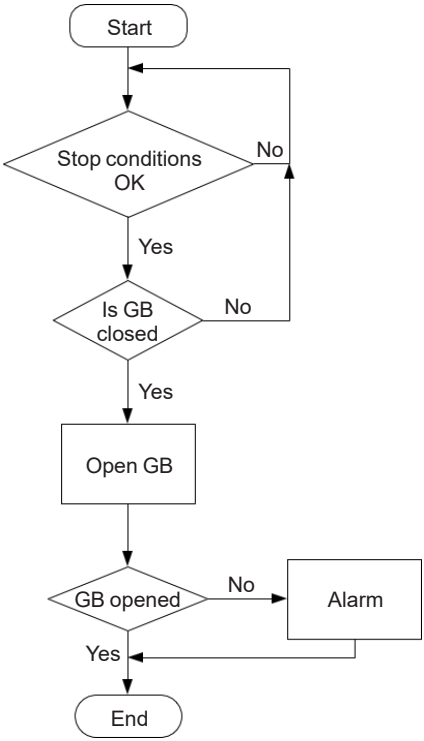

4.6.5 - Stop sequence

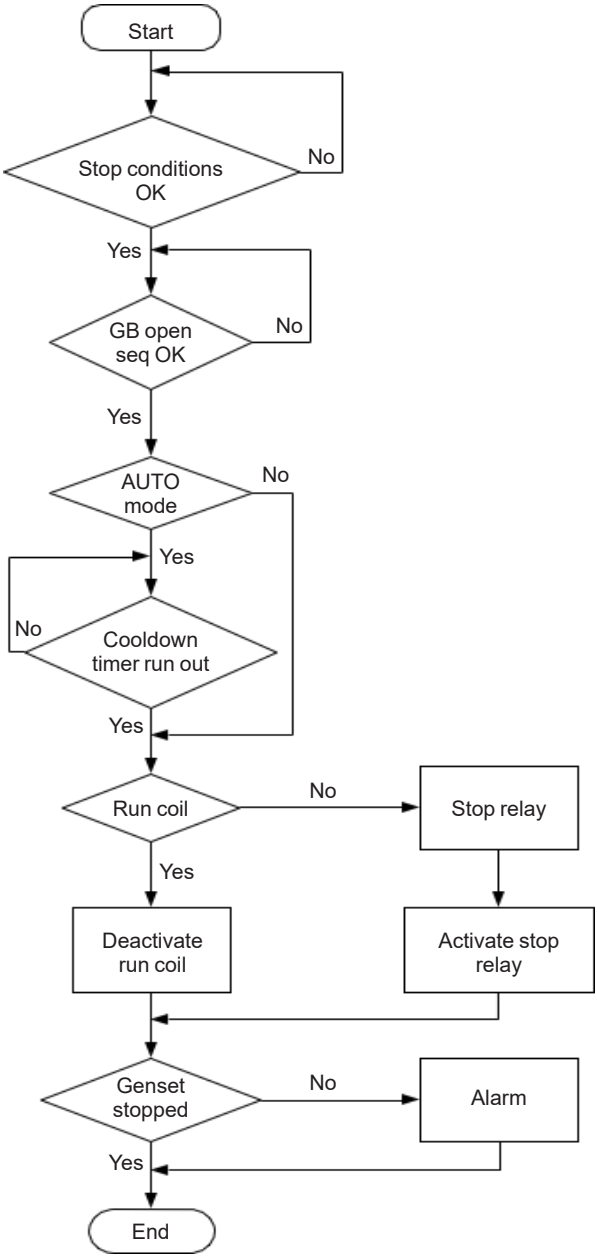

4.6.6 - Start sequence

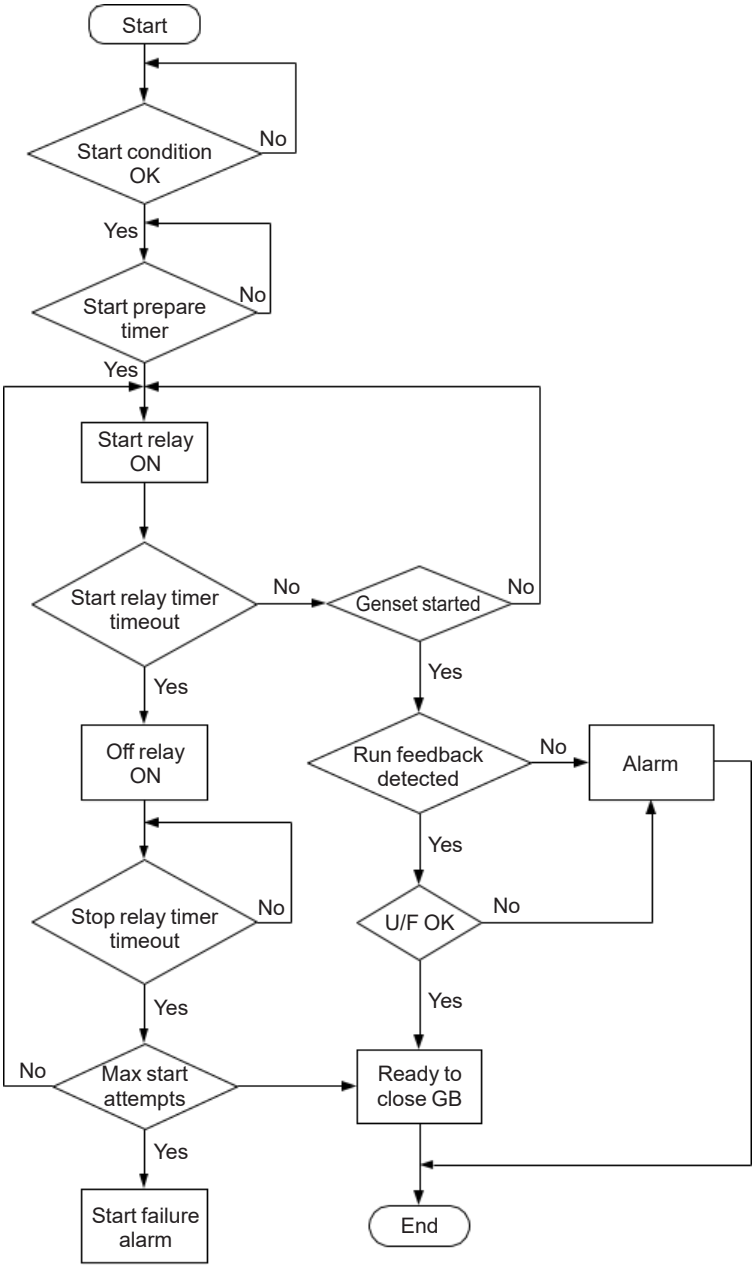

4.6.7 - MB close sequence

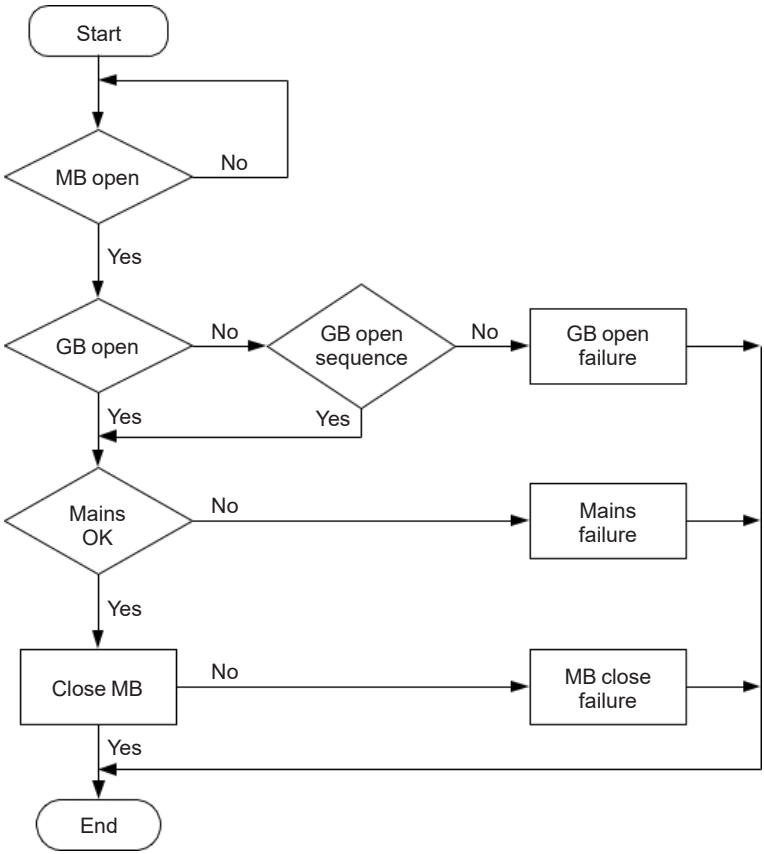

4.6.8 - GB close sequence

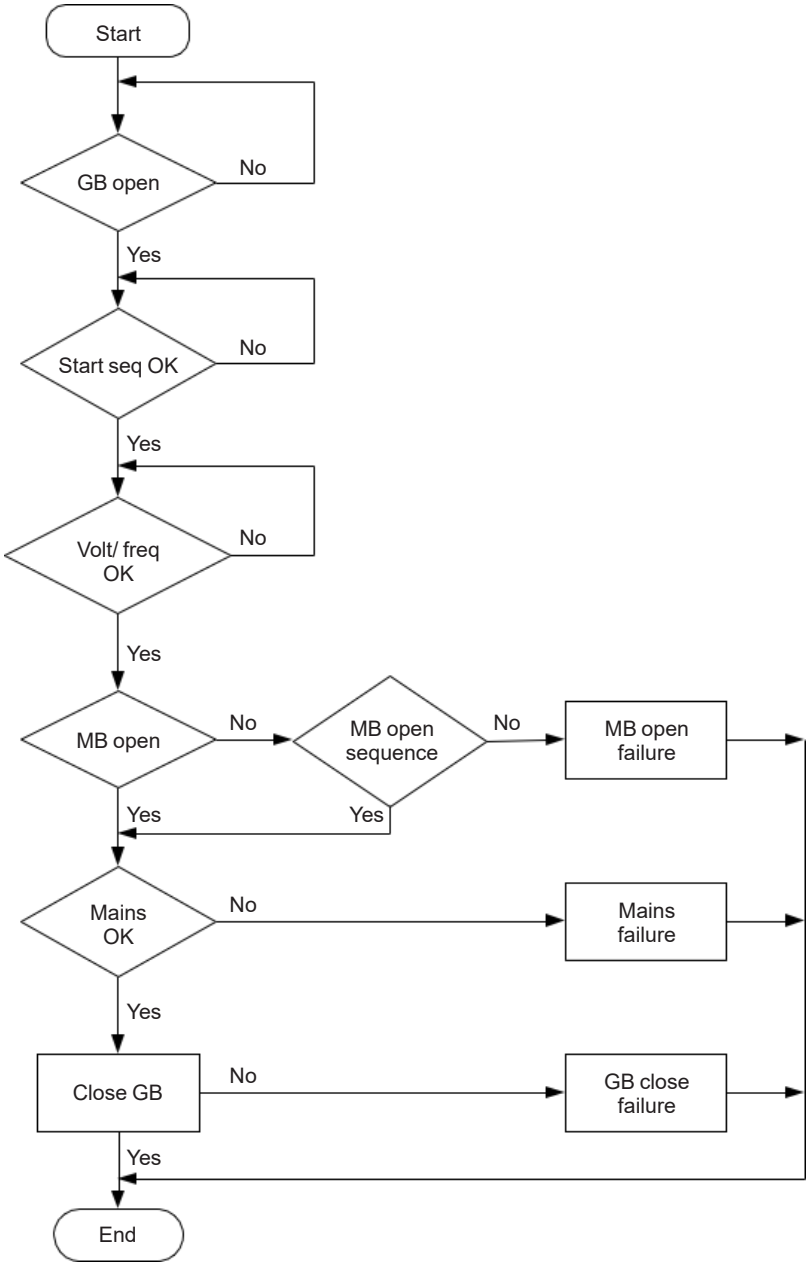

4.6.9 - Load takeover

4.6.10 - Island operation

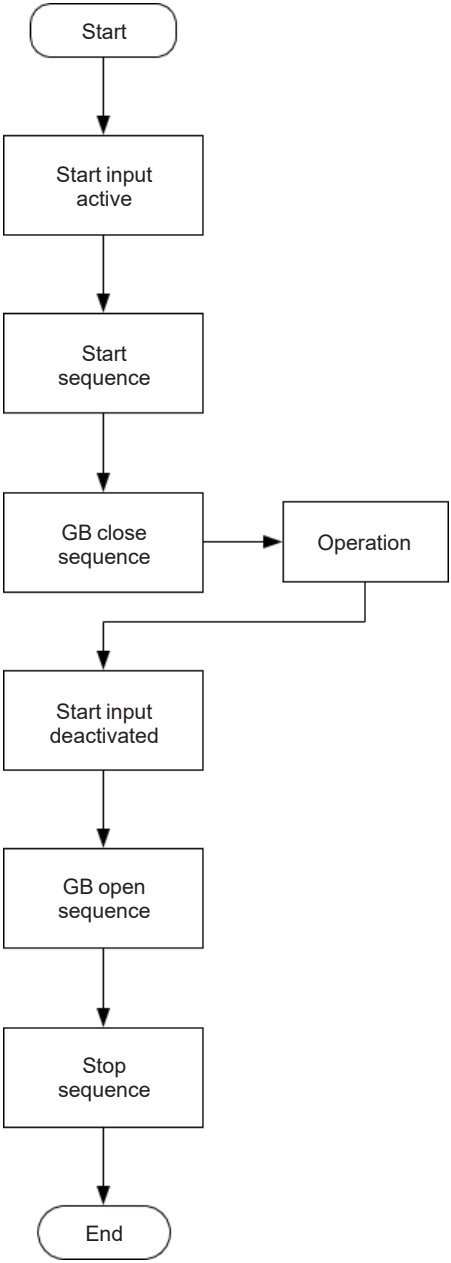

4.6.11 - Automatic Mains Failure, AMF

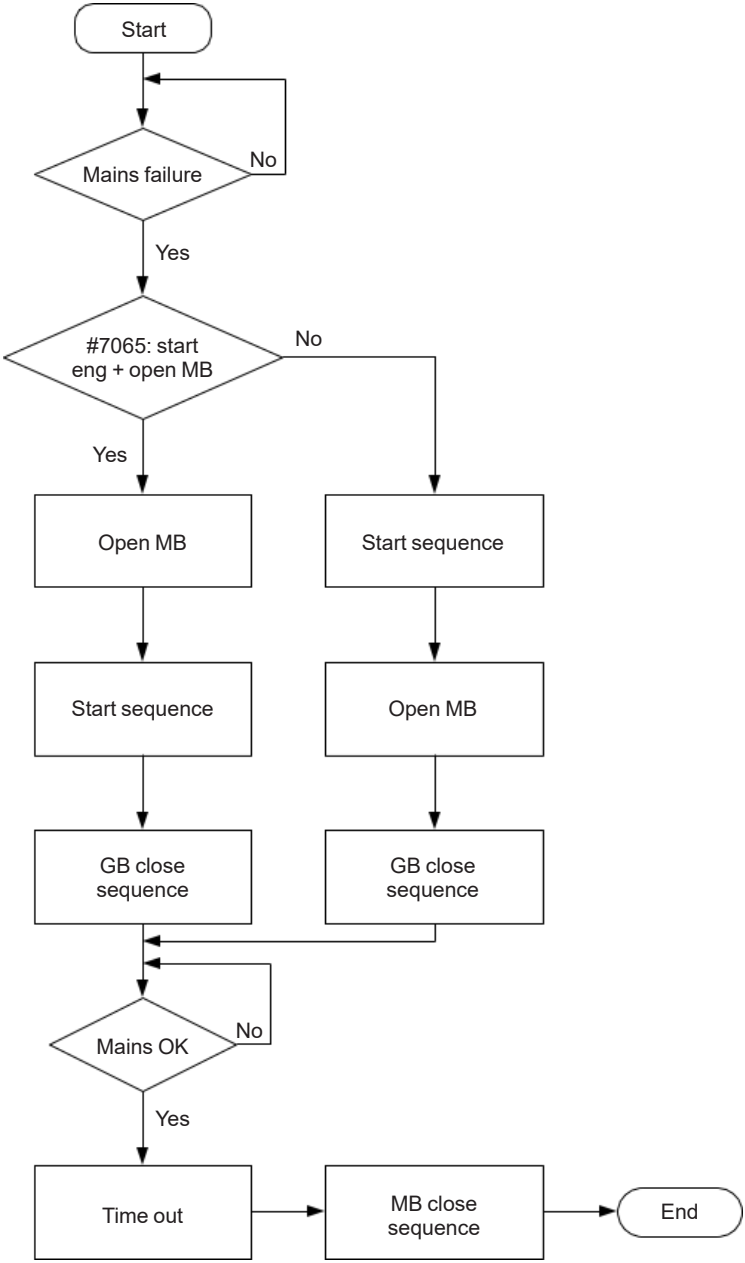

4.6.12 - Test sequence

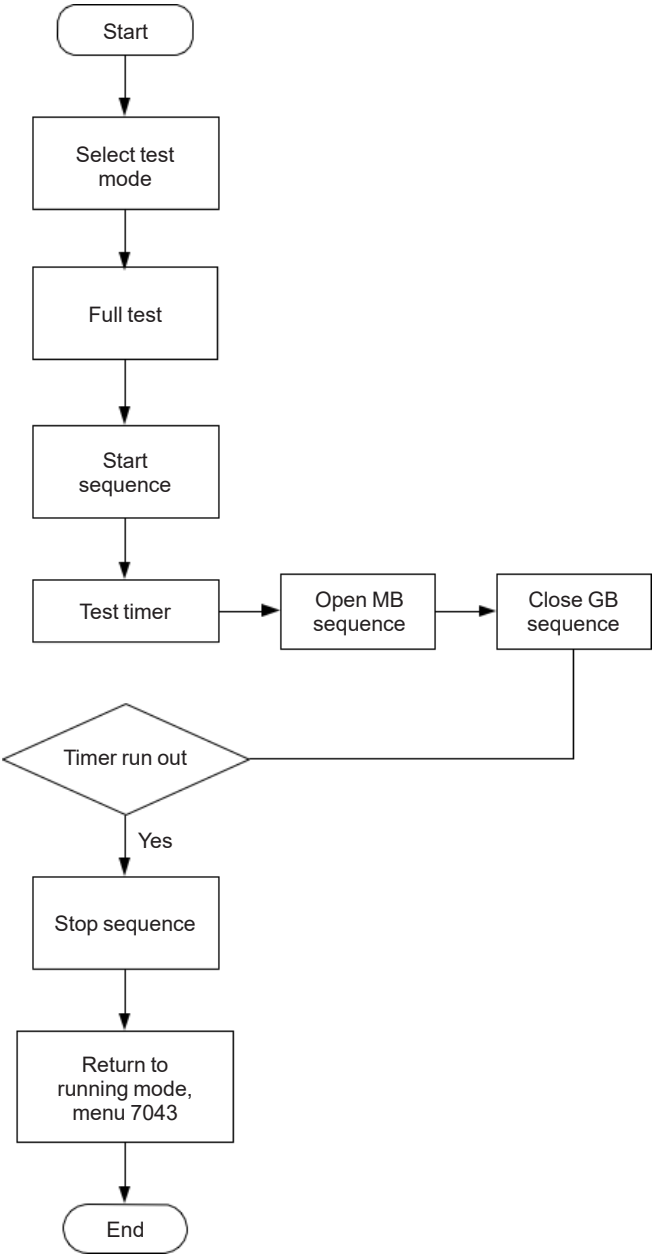

4.7 - Sequences

4.7.1 - Sequences

The following contains information about the sequences of the engine, the generator breaker, and the mains breaker. These sequences are automatically initiated if the auto mode is selected.

In the manual mode, the selected sequence is the only sequence initiated (e.g. press the START push-button: the engine will start, but not close the breaker).

The following sequences will be illustrated below:
- START sequence
- STOP sequence
- Breaker sequences

4.7.2 - Start sequence

The following drawings illustrate the start sequences of the genset with normal start prepare and extended start prepare.

No matter the choice of start prepare function, the run coil is activated before the start output (starter). The time between the run coil and the start output is setup in parameter 6151. In the following drawings this time is set to 1 sec.

Start sequence:
Normal start prepare

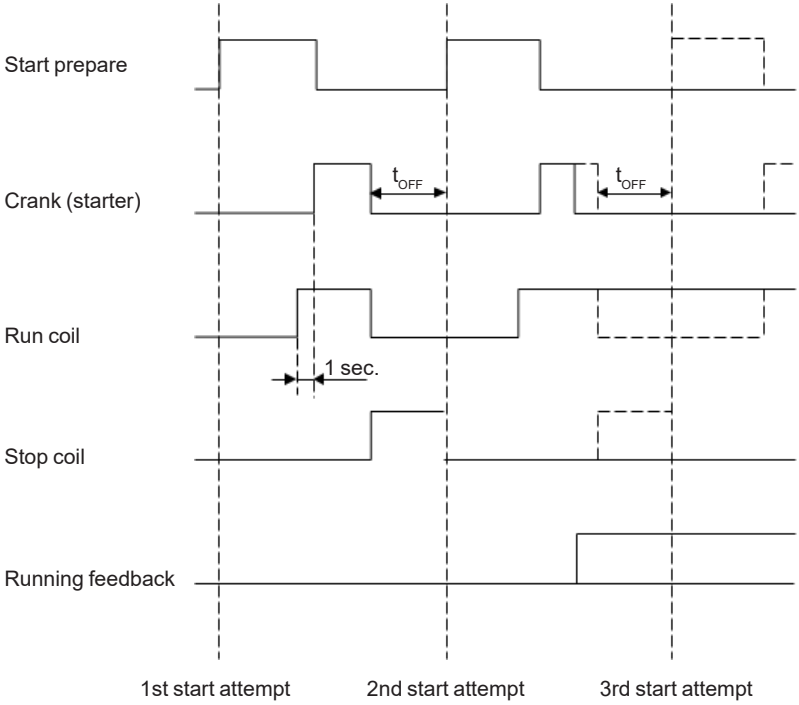

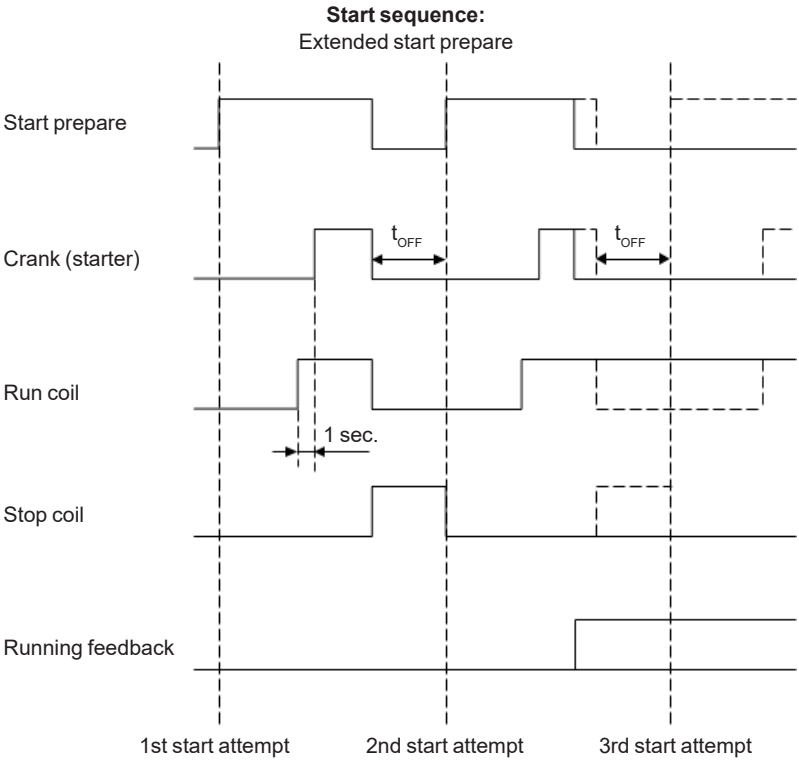

4.7.3 - Start sequence conditions

The start sequence initiation can be controlled by the following conditions (Multi inputs):

- 4-20mA
- PT100/PT1000
- RMI oil pressure
- RMI water temperature
- RMI fuel level
- Binary

This means that if e.g. the oil pressure is not primed to the sufficient value, then the crank output will not engage the starter motor.

The selection is made in setting 6185. The rule is that the value (mA, temperature, oil pressure, fuel level or binary input) must exceed the setpoint of setting 6186 before starting is initiated. If binary signal is used, the treshold value in channel 6186 must be between 0.1 - 0.9.

If the value in 6186 is set to 0.0, the start sequence is initiated as soon as it is requested.

The diagram below shows an example where the RMI signal builds up slowly, and starting is initiated at the end of the third start attempt.

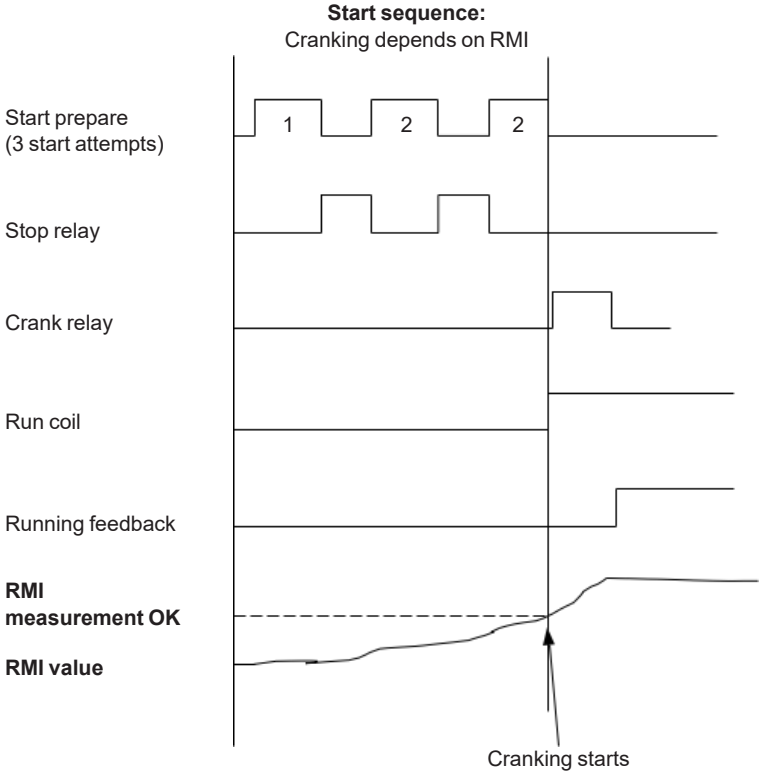

4.7.4 - Running feedback

Different types of running feedback can be used to detect if the motor is running. Refer to menu 6170 for selection of the running feedback type.

The running detection is made with a built-in safety routine. The running feedback selected is the primary feedback. At all times, all the types of running feedback is used for running detection. If a running feedback is detected based on one of the secondary choices, the genset will start. This way, the genset will still be functional even though a tacho sensor is damaged or dirty.

As soon as the genset is running, no matter if the genset is started based on the primary or secondary feedback, the running detection will be made, based on all available types.

ControlReg200/ControlReg200P

The sequence is shown in the diagram below.

Running feedback failure

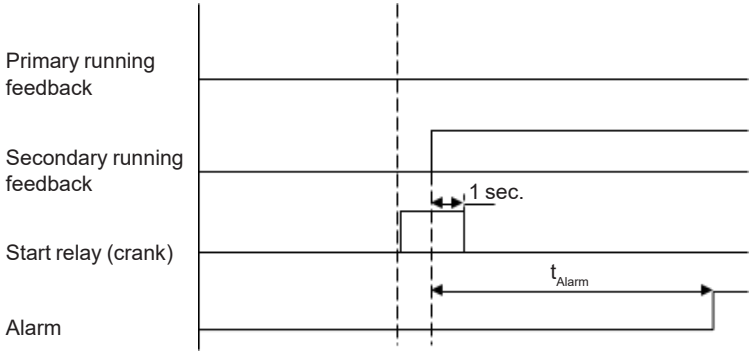

Interruption of start sequence

The start sequence is interrupted in the following situations:

Event	Comment
Stop signal	
Start failure	
Remove starter feedback	RPM setpoint (based on MPU or frequency reading)
Running feedback	Multi input set to binary
Running feedback	RPM setpoint (based on MPU or frequency reading).
Running feedback	Frequency measurement above threshold (16-70Hz) (ch. 6176). The frequency measurement requires a voltage measurement of 30% of U_{NOM}. The running detection based on the frequency measurement can replace the running feedback based on MPU, binary input or engine communication.
Running feedback	Oil pressure setpoint (menu 6175)
Running feedback	EIC (engine communication)
Emergency stop	
Alarm	Alarms with shutdown" or "trip and stop" fail class
Stop push-button on display	Manual mode
Modbus stop command	Manual mode
Binary stop input	Manual mode
Deactivate the "auto start/stop"	Auto mode in the following genset modes: island operation or load takeover mode.

If ch. 6171 (Number of teeth) is set to 0, the rpm is based on frequency measurement.

The controller cannot be equipped with both «CAN EIC» and «MPU» as they use the same terminals (term. 1-3).

Setpoints related to the start sequence

- Crank failure alarm **(4530 Crank failure)**

This alarm will be raised if the specified RPM is not reached before the delay has expired.

- Run feedback failure **(4540 Run feedb. fail)**

If running is detected on the frequency (secondary), but the primary running feedback, e.g. digital input, has not detected running, this alarm will be raised. The delay to be set is the time from the secondary running detection and until the alarm is raised.

- Hz/V failure **(4560 Hz/V failure)**

If the frequency and voltage are not within the limits set in menu 2110 after the running feedback is received, this alarm is raised when the delay has expired.

- Start failure alarm **(4570 Start failure)**

The start failure alarm occurs, if the genset has not started after the number of start attempts set in menu 6190.

- Start prepare **(6180 Starter)**

Normal prepare: the start prepare timer can be used for start preparation purposes, e.g. prelubrication or preheating. The start prepare output is activated when the start sequence is initiated and deactivated when the start output is activated. If the timer is set to 0.0 s, the start prepare function is deactivated.

Extended prepare: the extended prepare will activate the start prepare output when the start sequence is initiated and keep it activated when the start output activates until the specified time has expired. If the ext. prepare time exceeds the start ON time, the start prepare output is deactivated when the start output deactivates. If the timer is set to 0.0 s, the extended prepare function is deactivated.

Start ON time: the starter will be activated for this period when cranking.

Start OFF time: the pause between two start attempts.

4.7.5 - Stop sequence

The drawings illustrate the stop sequence.

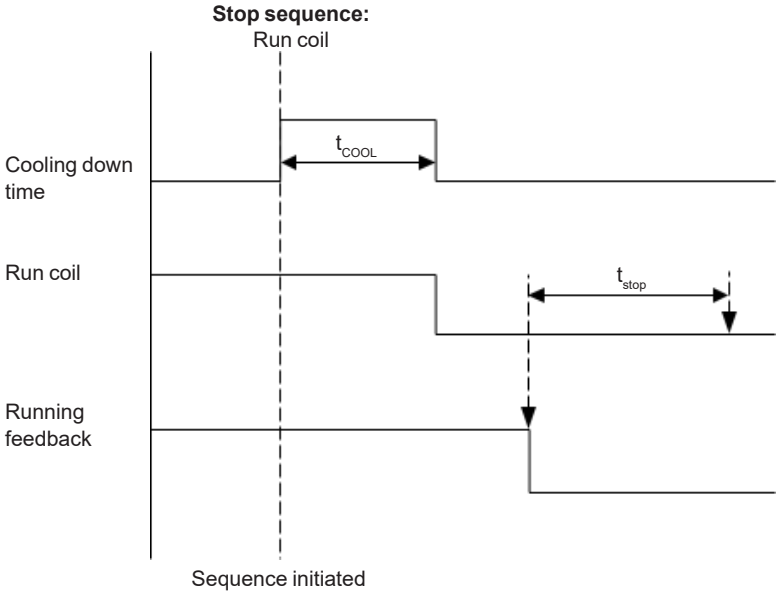

ControlReg200/ControlReg200P

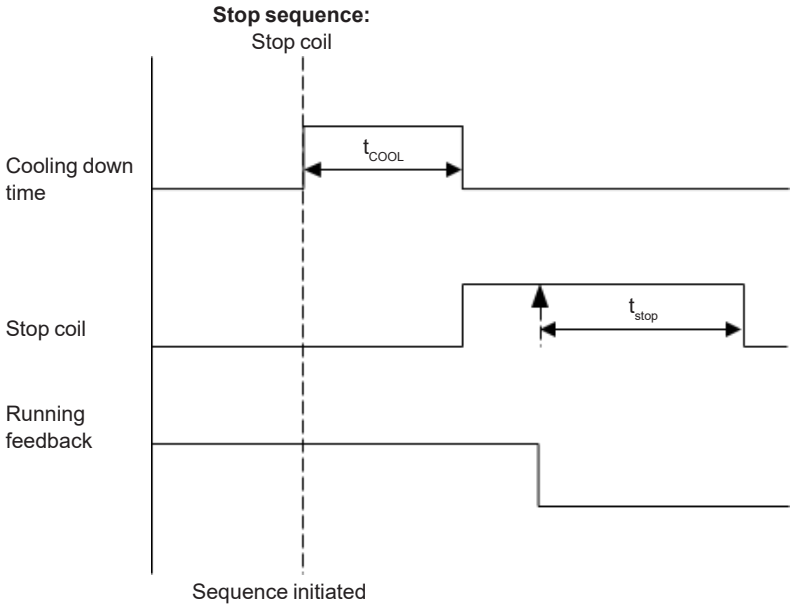

The stop sequence will be activated if a stop command is given. The stop sequence includes the cooling down time if the stop is a normal or controlled stop.

Description	Cooling down	Stop	Comment
Auto mode stop	X	X	
Trip and stop alarm	X	X	
Stop button on display	(X)	X	Manual. Cooling down is interrupted if the stop button is activated twice.
Remove "auto start/stop"	X	X	Auto mode: island operation and load takeover.
Emergency stop		X	Engine shuts down and GB opens.

The stop sequence can only be interrupted during the cooling down period. Interruptions can occur in these situations:

Event	Comment
Mains failure	AMF mode selected (or mode shift selected ON) and auto mode selected.
Binary start input	Auto mode: island operation and load takeover
GB close button is pressed	Manual mode

Setpoints related to the stop sequence

- Stop failure **(4580 Stop failure)**

A stop failure alarm will appear if the primary running feedback or the generator voltage and frequency are still present after the delay in this menu has expired.

- Stop **(6210 Stop)**

Cooling-down: the length of the cooling-down period.

Extended stop: the delay after the running feedback has disappeared until a new start sequence is allowed. The extended stop sequence is activated any time the stop button is pressed.

Cool down controlled by engine temperature: the engine temperature-controlled cool-down is to ensure that the engine is cooled down below the setpoint in menu 6214 «Cool down temperature» before the engine is stopped. This is particularly beneficial if the en- gine has been running for a short period of time and therefore not reached normal cooling water temperature, as the cool-down period will be very short or none at all. If the engine has been running for a long period, it will have reached normal running temperature, and the cool-down period will be the exact time it takes to get the temperature below the temperature setpoint in menu 6214.

If, for some reason, the engine cannot get the temperature below the temperature setpoint in 6214 within the time limit in parameter 6211, the engine will be shut down by this timer. The reason for this could be high ambient temperature.

If the cooling-down timer is set to 0.0 s, the cooling-down sequence will be infinite.
If the cooling-down temperature is set to 0 deg., the cooling-down sequence will be entirely controlled by the timer.

4.7.6 - Breaker sequences

The breaker sequences will be activated depending on the selected mode:

Mode	Genset mode	Breaker control
Auto	All	Controlled by the unit
Manual	All	Push-button, M-Logic, Modbus (USB), Digital input
Block	All	Controlled by the unit

Before closing the breakers, it must be checked that the voltage and frequency are OK.

Setpoints related to MB control.

7080 MB control

Mode shift: when enabled, the controller will perform the AMF sequence in case of a mains failure in load takeover or TEST mode.

MB close delay: the time from GB OFF to MB ON.

Load time: after opening of the breaker, the MB ON sequence will not be initiated before this delay has expired. Please refer to the description of «Breaker spring load time».

The GB can only be closed if the mains breaker is open. The MB can only be closed if the generator breaker is open.

- AMF MB opening **(7060 U mains failure)** (only for ControlReg200P)
It is possible to select the functionality of the mains breaker closing function. This is necessary if the unit operates in Automatic Mains Failure (AMF).

The possibilities are:

Selection	Description
Start engine and open mains breaker	When a mains failure occurs, the mains breaker opens, and the engine starts at the same time.
Start engine	When a mains failure occurs, the engine starts. When the generator is running and the frequency and voltage are OK, the MB opens and the GB closes.

4.7.7 - AMF timers

The time charts describe the functionality at a mains failure and at mains return. The timers used by the AMF function are indicated in the table below:

Timer	Description	Menu number
t_{FD}	Mains failure delay	**7070 f mains failure** **7060 U mains failure**
t_{FU}	Frequency/voltage OK	**6220 Hz/V OK**
t_{FOD}	Mains OK delay[1]	**7070 f mains failure** **7060 U mains failure**
t_{GBC}	GB ON delay	**6230 GB control**
t_{MBC}	MB ON delay	**7080 MB control**

1) If the generator is not in «auto» the «mains OK delay» is not used, the MB will close immediately when the mains is OK.

Example 1:
7065 Mains fail control: Start engine and open MB

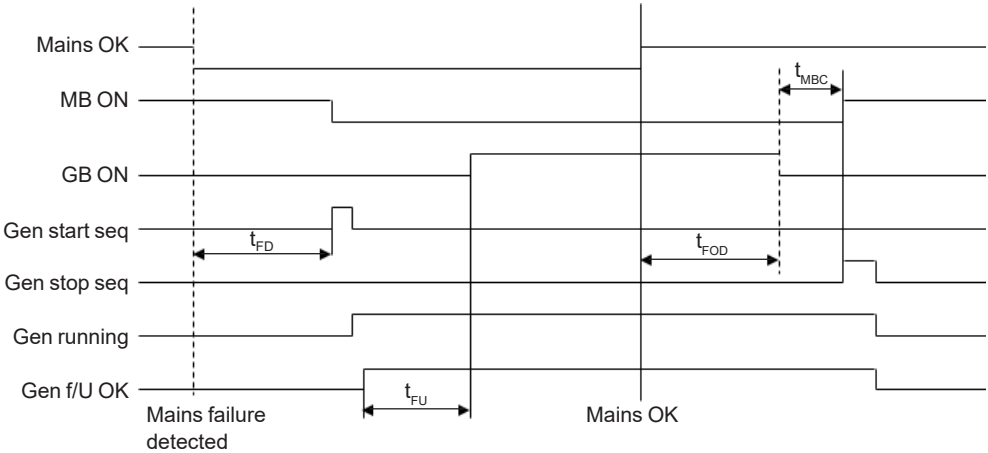

Example 2:
7065 Mains fail control: Start engine

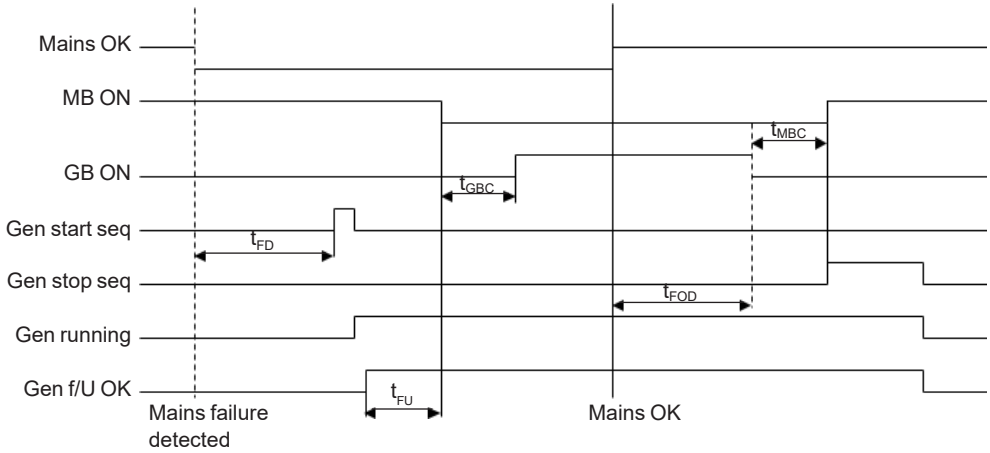

Conditions for breaker operations

The breaker sequences react depending on the breaker positions and the frequency/voltage measurements.

The conditions for the ON and OFF sequences are described in the table below:

Sequence	Condition
GB ON, direct closing	Running feedback Generator frequency/voltage OK MB open
MB ON, direct closing	Mains frequency/voltage OK GB open
GB OFF, direct opening	MB open
MB OFF, direct opening	Alarms with fail classes: Shut down or Trip MB alarms

5-DISPLAY AND MENU STRUCTURE

Information about configuration of the view lines in the display can be found in the help-file (F1) for the Utility Software.

6 - ENGINE COMMUNICATION

Information about engine communication can be found in the manual ref. 5313, which is located on LEROY-SOMER homepage under documentation for ControlReg.

7 - AVR (AUTOMATIC VOLTAGE REGULATOR) FUNCTIONS

7.1 - General information

The main particularity of the ControlReg200/200P is the association between the controller and a voltage regulator. This section deals with the description of the AVR part.

Access to AVR menu

The AVR regulation menu can be accessed via the ControlReg200/200P's general navigation menu; or quick access to this menu can be obtained by pressing the Up and Down push-buttons (simultaneously).

Generalities: AC SUPPLY SHUNT excitation system

The shunt excitation alternator is auto-excited with the ControlReg200/200P. The AVR part controls the excitation current according to the alternator's output voltage. The shunt excitation alternator is a simple concept and does not have a short-circuit capacity.

Following are given 2 diagram for 6 leads and 12 leads alternators.

ControlReg200/ControlReg200P

ControlReg200P with 12 leads alternator

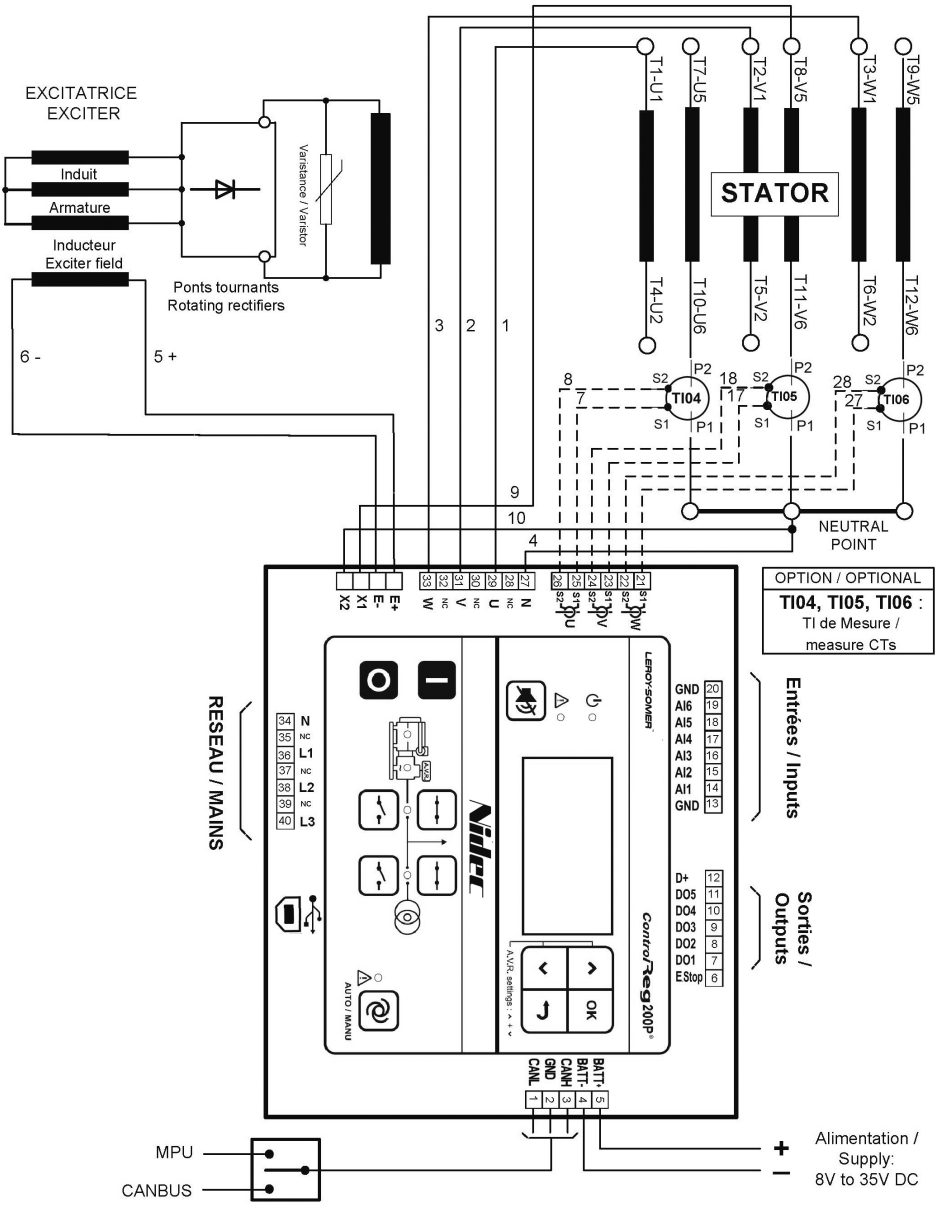

ControlReg200/ControlReg200P

ControlReg200P with 6 leads alternator

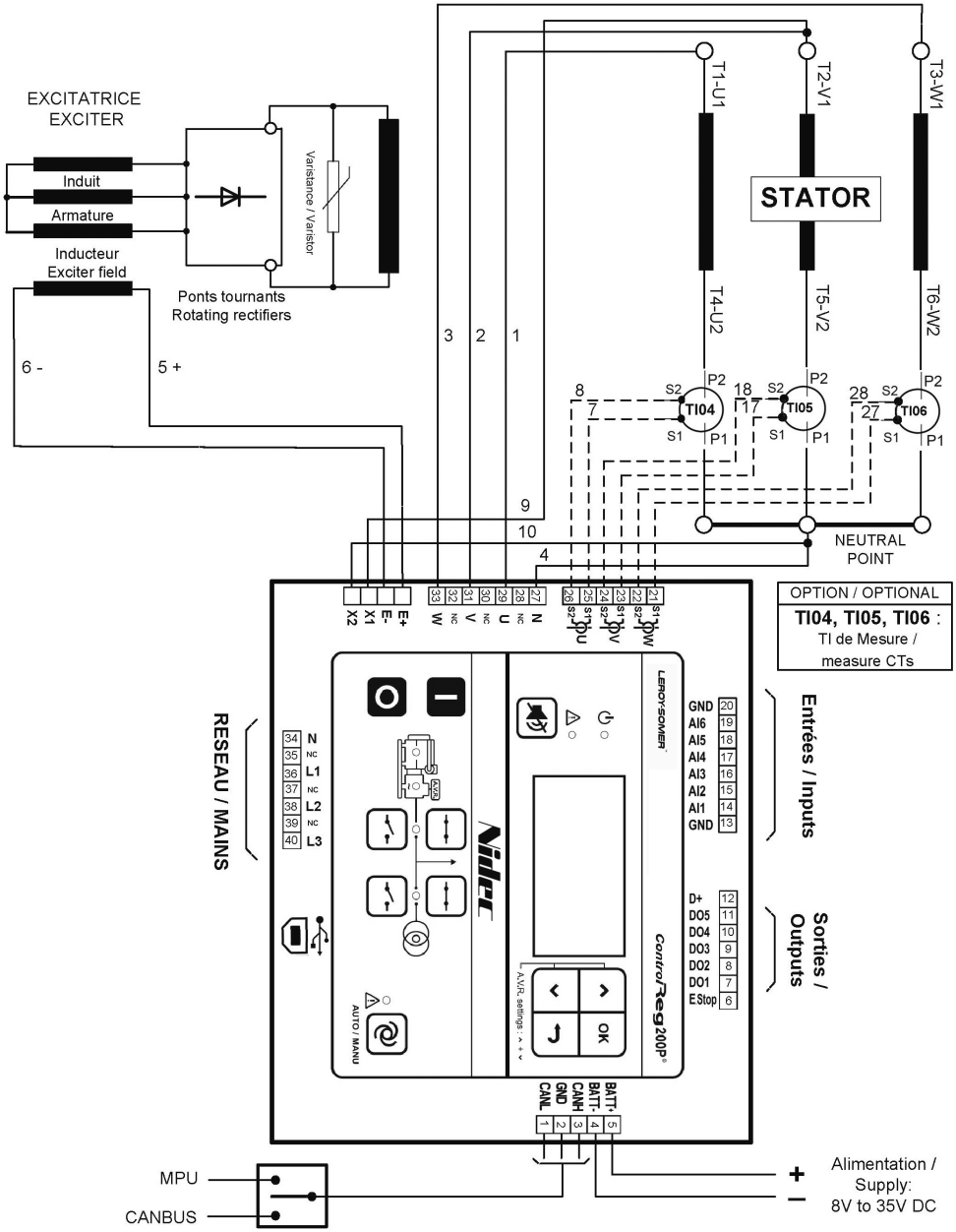

ControlReg200/ControlReg200P

The AVR manages the generator excitation current to ensure that the output voltage follows the desired set point. The list below gives the characteristics of the excitation levels.

Without load: I excitation = 0.6 to 1 A
With load: maximum continuous I excitation = 4 A
Forcing (10 s): maximum I excitation = 7 A
Exciter field resistance = 10 to 30 ohm

- Voltage regulation:
  - Around ±0.5 % for total harmonic distortion less than 5 %
  - Around ±2.5 % for higher total harmonic distortion, but less than 20 %
- Power supply protected by 8 A, 250 V fast fuse, breaking capacity 30 kA
- The AVR terminals are composed by:
  - E+ and E- standing for exciter stator input
  - X1 and X2 standing for the AVR's AC supply voltage.
    This AC supply ranges from 90 V to 277 V 50Hz and 60 Hz single phase alternator.
    A step-down transformer must be used for the higher voltages. It is used to create the excitation current through power electronics components (diodes and IGBT).

7.2 - U/f function, volt-Hertz function

The ControlReg200/200P is equipped with engine help, which consists in reducing the voltage according to the engine frequency.

When set to a high value, this function, called U/f, induces a greater voltage drop, and then the resistive torque on the engine is reduced. Consequently, the speed drop is reduced and the time response to go back to rated speed and voltage is improved. The diagram below gives an overview of voltage profiles according to the U/f setting.

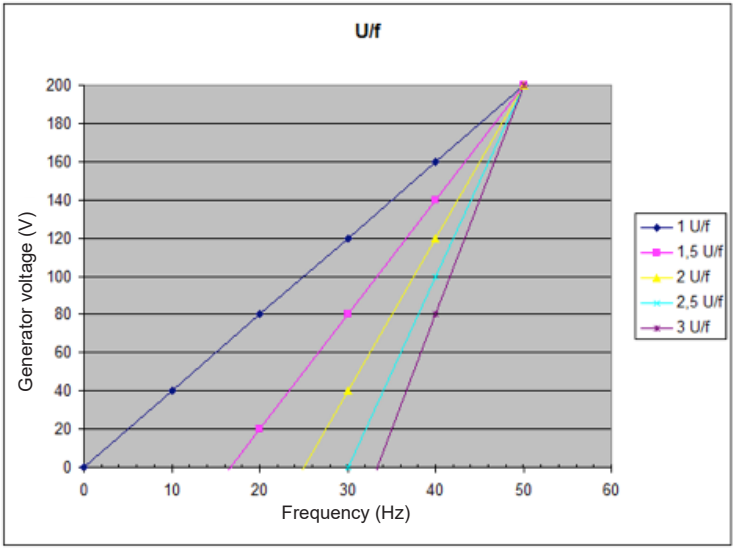

The ControlReg200/200P allows the setting of volt-Hertz function for 1.0 × U/f to 3.0 × U/f in steps of 0.1.

7.3 - Voltage and frequency adjustment

Voltage and frequency can be adjusted with the ControlReg200/200+ HMI.

There are two possible voltage ranges:
- Low range for up to 350V operations
- High range for up to 530V applications

For all operations above 530 V, a step-down transformer is necessary. The user can select single phase or three-phase operation through the utility software.
The diagram below describes the knee position for 50 Hz and 60 Hz operation. The knee defines the frequency above which the voltage set point is constant. Below this knee value, the voltage set point follows U/f law as described in the previous section.

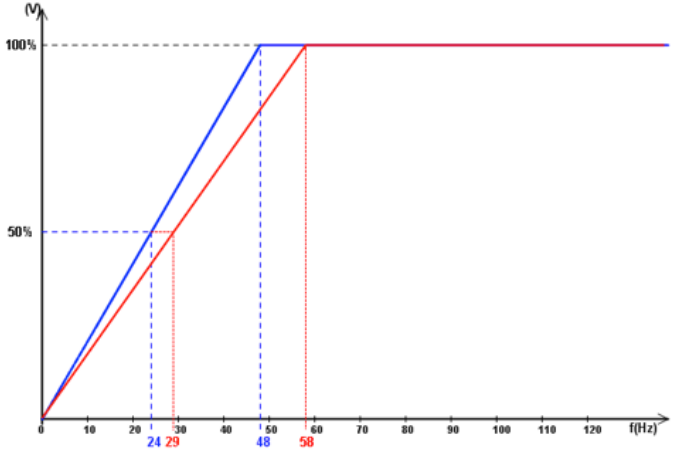

The ControlReg allows a knee setting from 45 Hz to 65 Hz with 0.1 Hz steps.

7.4 - Soft-start function

The ControlReg200/200P can manage the way the voltage is built up owing to the soft-start based on a timer. This timer defines how long it should take for the soft-start to increase the voltage up to nominal voltage. Below is given an example of three different voltage start-ups based on three different increasing soft-starts.

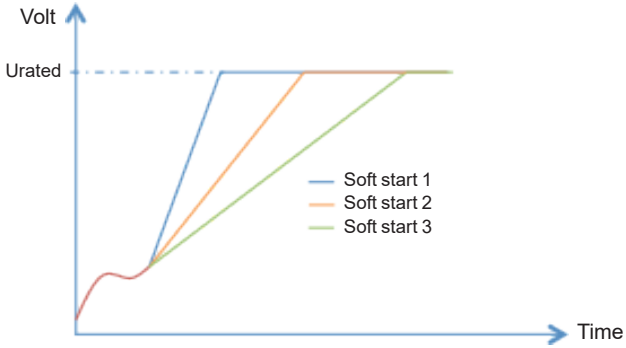

The soft-start can be adjusted from 0.1s to 120s in steps of 0.1s.

ControlReg200/ControlReg200P

7.5 - ControlReg200/200P field weakening

This is applied when the user wants to manually de-excite the ControlReg200/200P.

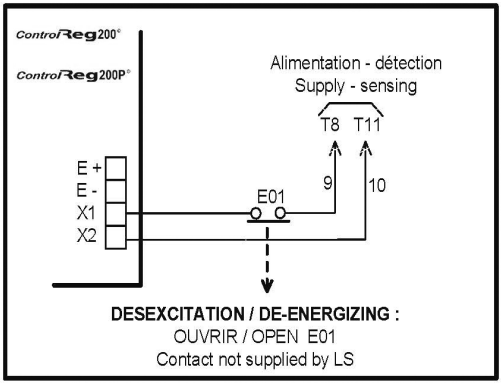

The excitation is switched off by disconnecting the ControlReg200/200P power supply (1 wire X1 or X2). Contact rating: 16 A - 250 V AC.

Do not reclose the power supply until the voltage has reached a value ≤15 % of the rated voltage (approximately 5 seconds after opening).

7.6 - ControlReg200/200P field forcing

When the alternator loses its residual magnetism preventing voltage build-up, the following diagram can be used to magnetize it again.

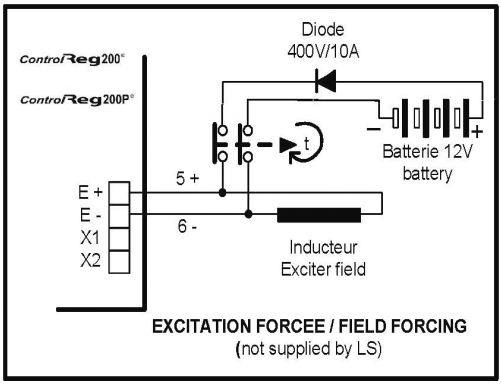

- The battery must be isolated from the ground.
- Exciter field may be at line potential.

ControlReg200/ControlReg200P

7.7 - Troubleshooting on ControlReg200/200P malfunction

Fault	Act	Effect	Check/root cause
No voltage at no load when starting up	Connect a 4 to 12 V battery on E- and E+ respecting the polarity for 2 to 3 seconds (see section regarding field forcing)	The alternator starts up and its voltage is still correct when the battery is removed	Lack of residual magnetism
		The alternator starts up but its voltage does not reach the rated value when the battery is removed	Check the connections of the ControlReg200/200P voltage sensing
		The alternator starts up but its voltage disappears when the battery is removed	Faulty ControlReg200/200P
Voltage too low	Check the drive speed	Correct speed	- Check the ControlReg200/200P connections and settings (the product may be faulty) - Faulty exciter - Rotating diodes burnt out - Main field winding short-circuited. Check the resistance
		Speed too low	Increase the drive speed (do not change the ControlReg200/200P settings until the correct speed is reached)
Voltage too high	Adjust ControlReg200/200P setting	Adjustment ineffective	Faulty ControlReg200/200P
Voltage oscillations	Adjust ControlReg200/200P PID		- Check the speed: possibility of cyclic irregularity - Sporadic disconnection on the terminals - Faulty ControlReg200/200P
Voltage correct at no load and too low when on load	Run at no load and check the voltage between E+ and E- on the ControlReg200/200P		- Check the speed (or knee point set too high) - Faulty rotating diodes - Short circuit in the main field. Check the resistance - Faulty exciter armature
Voltage disappears during operation	Check the ControlReg200/200P, the surge suppressor and the rotating diodes, and replace any defective components	The voltage does not return to the rated value	- Exciter winding open circuit - Faulty induced excitation - Faulty ControlReg200/200P - Main field open circuit or short-circuited

8 - ADDITIONAL FUNCTIONS

8.1 - Start functions

8.1.1 - Start functions

The controller will start the genset when the start command is given. The start sequence is deactivated when the remove starter event occurs or when the running feedback is present.

The reason for having two possibilities to deactivate the start output is to be able to delay the alarms with run status.

If it is not possible to activate the run status alarms at low revolutions, the remove starter function must be used.

An example of a critical alarm is the oil pressure alarm. Normally, it is configured according to the shutdown fail class. But if the starter motor has to disengage at 400 RPM, and the oil pressure does not reach a level above the shutdown setpoint before 600 RPM, then the genset would shut down if the specific alarm was activated at the preset 400 RPM. In that case, the running feedback must be activated at a higher number of revolutions than 600 RPM.

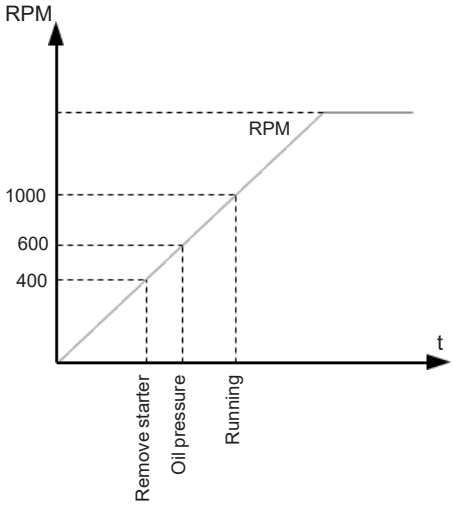

8.1.2 - Digital feedbacks

If an external running relay is installed, the digital control inputs for running detection or remove starter can be used.

Running feedback

When the digital running feedback is active, the start output is deactivated, and the starter motor will be disengaged.

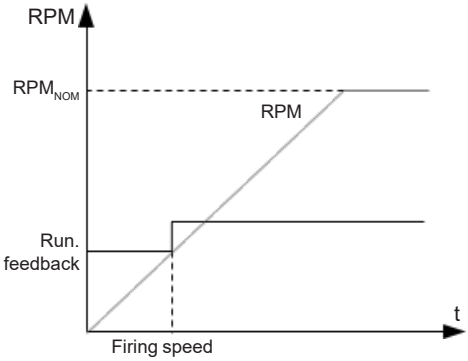

The diagram illustrates how the digital running feedback is activated when the engine has reached its firing speed.

Remove starter

When the digital remove starter input is present, the start output is deactivated, and the starter motor will be disengaged.

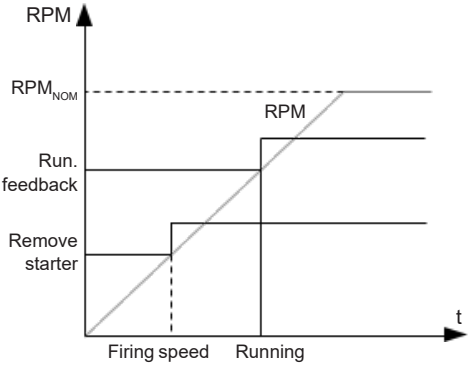

The diagram illustrates how the remove starter input is activated when the engine has reached its firing speed. At the running speed, the digital running feedback is activated.

The remove starter input must be configured from a number of available binary inputs.

The running feedback is detected by either the digital input (see diagram above), frequency Measurement, MPU (Magnetic Pick-Up) or EIC (engine communication).

When choosing frequency running feedback, the level will be configurable in channel 6176.

8.1.3 - Analogue tacho feedback

When a magnetic pick-up (MPU) is being used, the specific level of revolutions for deactivation of the start output can be adjusted.

Running feedback

The diagram below shows how the running feedback is detected at the firing speed level. The factory setting is 1000 RPM **(6170 Running detect.).**

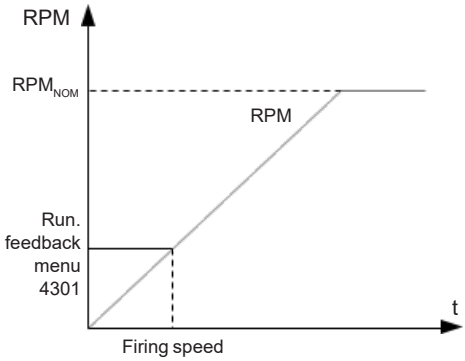

Remove starter input

The drawing below shows how the setpoint of the remove starter is detected at the firing speed level. The factory setting is 400 RPM **(6170 Running detect.).**

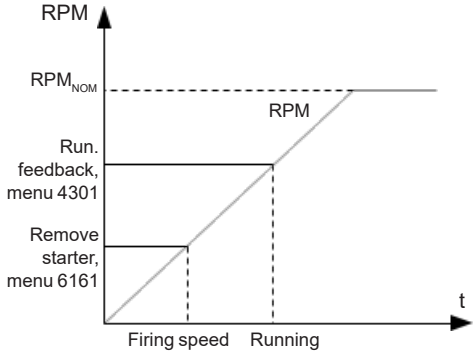

The number of teeth on the flywheel must be adjusted in menu 6170 when the MPU input is used.

8.1.4 - Oil pressure

The multi-inputs can be used for the detection of running feedback. The terminal in question must be configured as a RMI input for oil pressure measurement.

When the oil pressure increases above the adjusted value **(6175 Pressure level)**, the running feedback is detected, and the start sequence is ended.

Running feedback

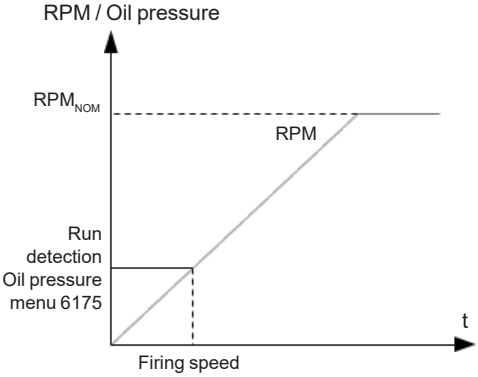

Remove starter input

The drawing below shows how the setpoint of the «remove starter input» is detected at the firing speed level. The factory setting is 400 RPM **(6170 Running detect.)**.

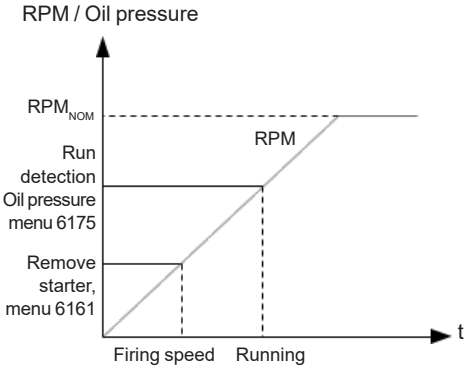

The remove starter function can use the MPU or a digital input.

8.2 - Phase sequence error

8.2.1 - Description of phase sequence error

Prior to closing a breaker, the unit checks that the phase sequence is correct, depending on the chosen phase direction in parameter 2154: «phase rotation». If it is incorrect (reversed), an alarm will be issued, and the breaker in question will not be closed.

8.3 - Breaker types

There are three possible selections for the setting of breaker type for both mains breaker and generator breaker. The breaker type is selected in the application configuration.

Continuous NE

This type of signal is most often used combined with a contactor. When using this type of signal, the controller will only use the close breaker (e.g. GB On) output. The output will be activated for closing of the contactor and will be deactivated for opening of the contactor (NO contactor). Continuous NE gives a high signal when active.

Pulse

This type of signal is most often used combined with circuit breaker. With the setting pulse, the controller will use the close command (e.g. GB On) and the open command output (e.g. GB Off). The close breaker output will activate for a short time for closing of the circuit breaker. The open breaker output will activate for a short time for opening of the breaker.

Compact

This type of signal will most often be used combined with a compact breaker, a direct controlled motor-driven breaker. With the setting compact, the controller will need to use both a close command (e.g. GB On) and an open command output (e.g. GB Off). The close breaker output will activate for a short time for the compact breaker to close. The breaker off output will activate for the compact breaker to open and hold it activated long enough for the motor in the breaker to recharge the breaker. If the compact breaker is tripped externally, it is recharged automatically before next closing.

If compact breaker is selected, the length of breaker open signal is adjusted as the delay time for the GB/MB open failure alarm in menu 2160/2200.

8.4 - Breaker spring load time

To avoid breaker close failures in situations where breaker ON command is given before the breaker spring has been loaded, the spring load time can be adjusted for GB and MB.

The following describes a situation where you risk getting a close failure:

1. The genset is in auto mode, the auto start/stop input is active, the genset is running and the GB is closed.

2. The auto start/stop input is deactivated, the stop sequence is executed and the GB is opened.

3. If the auto start/stop input is activated again before the stop sequence is finished, the GB will give a GB close failure as the GB needs time to load the spring before it is ready to close.

If the breaker needs time to reload the spring after it has opened, then the controller can take this delay into account. This can be controlled through timers in the controller or through digital feedbacks from the breaker, depending on the breaker type and therefore there are two available solutions:

1. Timer-controlled

A load time setpoint for the GB and MB control for breakers with no feedback indicating that the spring is loaded. After the breaker has been opened, it will not be allowed to close again before the delay has expired. The setpoints are found in the menus 6230 and 7080.

2. Digital input

Two configurable inputs can be used for feedbacks from the breakers: One for GB spring loaded and one for MB spring loaded. After the breaker has been opened, it will not be allowed to close again before the configured inputs are active. The inputs are configured in the «Config menu» or with the PC utility software.

If the two solutions are used together, both requirements are to be met before closing of the breaker is allowed.

Breaker LED indication

To alert the user that the breaker close sequence has been initiated but is waiting for permission to give the close command, the LED indication for the breaker will be flashing green in this case.

8.4.1 - Principle

The diagram shows an example where a controller in island mode is controlled by the AUTO start/stop input.

This is what happens: When the AUTO start/stop input deactivates, the GB opens. The AUTO start/stop is reactivated immediately after the GB has opened, e.g. by the operator through a switch in the switchboard. However, the controller waits a while before it issues the close signal again, because the spring load time must expire (or the digital input must be activated - not shown in this example). Then the controller issues the close signal.

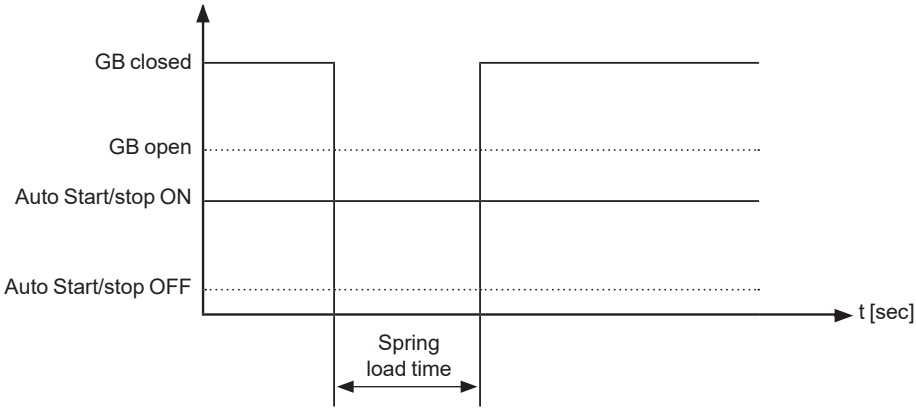

8.5 - Alarm inhibit

In order to select when the alarms are to be active, a configurable inhibit setting for each alarm has been made. The inhibit functionality is a way to make an alarm inactive when the events, chosen in the menu below, are active. The inhibit functionality is only available via the PC utility software. For each alarm, there is a drop-down window where it is possible to select which signals have to be present in order to inhibit the alarm.

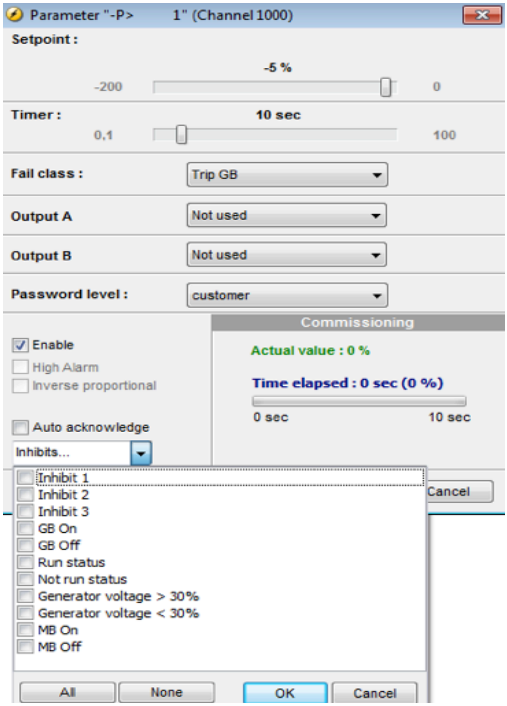

Selections for alarm inhibit:

Function	Description
Inhibit 1	M-Logic outputs: Conditions are programmed in M-Logic
Inhibit 2	
Inhibit 3	
GB ON (TB ON)	The generator breaker is closed
GB OFF (TB ON)	The generator breaker is open
Run status	Running detected and the timer in menu 6160 expired*
Not run status	Running not detected or the timer in menu 6160 not expired*
Generator voltage > 30%	Generator voltage is above 30% of nominal
Generator voltage < 30%	Generator voltage is below 30% of nominal
MB ON	The mains breaker is closed
MB OFF	The mains breaker is open

*** The timer in 6160 is not used if binary running feedback is used.**

Inhibit of the alarm is active as long as one of the selected inhibit functions are active.

Example:

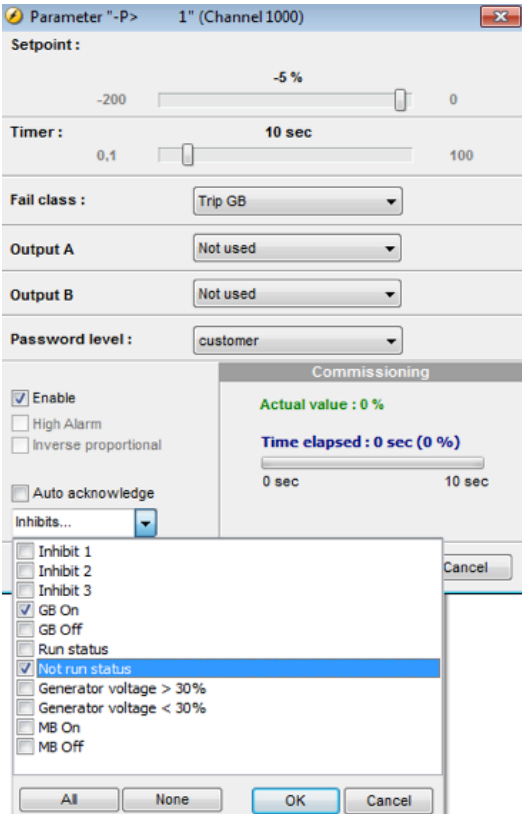

In this example, inhibit is set to *Not run status* and *GB ON*. Here, the alarm will only be active when the generator is running and disabled again when the GB is closed.

8.5.1 - Run status (6160)

Alarms can be adjusted to activate only when the running feedback is active and a specific time delay has expired.

The diagram below illustrates that after activation of the running feedback, a run status delay will expire. When the delay expires, alarms with *Run status* will be activated.

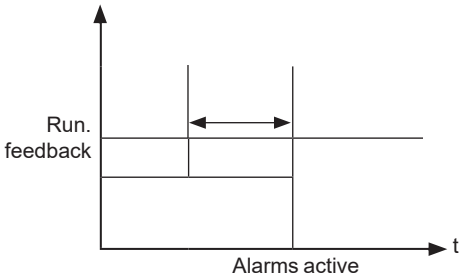

The timer is ignored if digital running feedback is used.

8.6 - Access lock

The purpose of access lock is to deny the operator the possibility to configure the unit parameters and change the running modes from the display or digital inputs. When activated, the display will say «Access lock» when pushing the display buttons affected by the access Lock (see the table below).
The input to be used for the access lock function is defined in the «Config menu» or with the PC utility software (USW). Access lock will typically be activated from a key switch installed behind the door of the switchboard cabinet.

Display Button	Button icon	Button status	Comment
START		Not active	
STOP		Not active	
GB ON		Not active	
GB OFF		Not active	
MB ON		Not active	
MB OFF		Not active	
TEST*		Not active	
AUTO/ MAN		Not active	
LED TEST*		Active	
HORN		Active	
UP		Active	
SELECT		Active	If the access lock is activated when the view menu system is displayed, it is not possible to access the setup menu. If the access lock is activated when the setup menu system is displayed, this button is not active.
DOWN		Active	
ESC		Active	

*** The function does not have a dedicated button on the display.**

After three minutes, the display returns to the view menu system. The setup menu system can only be entered again if the access lock is deactivated.

The following digital input functions are affected when access lock is activated:

Digital input name	Input status
Remote Start	Not active
Remote Stop	Not active
Remote GB ON	Not active
Remote GB OFF	Not active
Remote MB ON	Not active
Remote MB OFF	Not active
Test mode	Not active
Auto mode	Not active
Manual mode	Not active
Block	Not active

8.7 - Command timers

The purpose of the command timers is to be able to e.g. start and stop the genset automatically at specific times each weekday or certain weekdays.

If auto mode is activated, this function is available in island operation and load takeover operation. When set in AMF mode, the command timers are ignored.

To combine AMF and the use of command timers, enable «modeshift» and set genset mode to LTO. Up to four command timers can be used for e.g. start and stop. The command timers are available in M-Logic and can be used for other purposes than starting and stopping the genset automatically.

The settings can either be set up through the PC utility software or the display. Each command timer can be set for the following time periods:

- Individual days (MO, TU, WE, TH, FR, SA, SU)
- MO, TU, WE, TH
- MO, TU, WE, TH, FR
- MO, TU, WE, TH, FR, SA, SU
- SA, SU

To start in AUTO mode, the «Auto start/stop» command can be programmed in M-Logic or in the input settings.

The time-dependent commands are flags that are raised when the command timer is in the active period.

8.8 - Running output

6160 Run status can be adjusted to give a digital output when the genset is running.

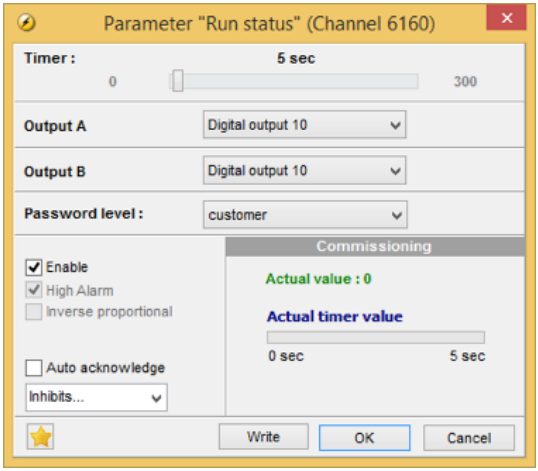

Select the wanted digital output in output A and output B and enable the function. Change the output function to «limit» in the output menu (Menu 5000). Then the output will activate, but no alarm will appear.

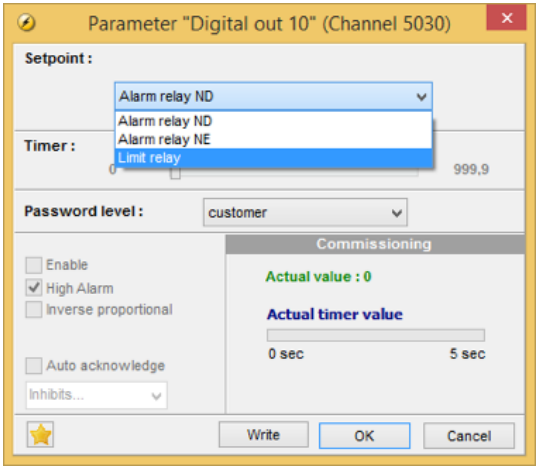

If the output function is not changed to «limit» function, an alarm will appear at every running situation.

8.9 - Idle running

8.9.1 - Idle running

The purpose of the idle run function is to change the start and stop sequences to allow the genset to operate under low temperature conditions.
It is possible to use the idle run function with or without timers. Two timers are available. One timer is used in the start sequence, and one timer is used in the stop sequence.
The main purpose of the function is to prevent the genset from stopping. The timers are available to make the function flexible.
The speed governor must be prepared for the idle run function if this function is to be used.
The function is typically used in installations where the genset is exposed to low temperatures which could generate starting problems or damage the genset.

8.9.2 - Description

The function is enabled and configured in 6290 Idle running. It has to be noted that the governor itself must handle the idle speed based on a binary signal from the unit (see the principle diagram below).
When the function is enabled, two digital inputs are used for control purposes. These inputs must be configured through the Utility software:

N°	Input	Description
1	Low speed input	This input is used to change between idle speed and nominal speed. This input does not prevent the genset from stopping - it is only a selection between idle and nominal speed. This input is typically used in combination with a monitoring of temperature, or a timer. Just after start up of genset, this input will be activated, locking down the genset to idle speed, until the temperature has reached an acceptable level or the timer is over. The idea is to make the genset run enough time and heat up before it is loaded. The final user is in charge of modifying the speed of the genset directly on the fuel injection system. This function is required when gensets are used in very cold conditions.
2	Temperature control input	When this input is activated, the genset will start. It will not be able to stop as long as this input is activated. To use temperature control it is necessary to enable idle speed in parameter 6295.

If the idle run function is selected by means of the timer, the low speed input is overruled. Turbo chargers not originally prepared for operating in the low speed area can be damaged if the genset is running in «idle run» for too long.

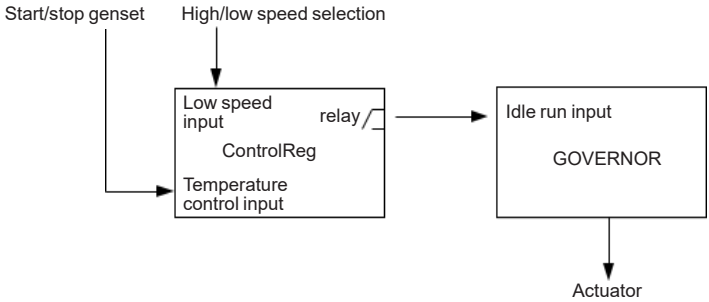

8.9.3 - Examples

Idle speed during starting and stopping

In this example both the start and the stop timers are activated.

The start and stop sequences are changed in order to let the genset stay at the idle level before speeding up. It also decreases the speed to the idle level for a specified delay time before stopping.

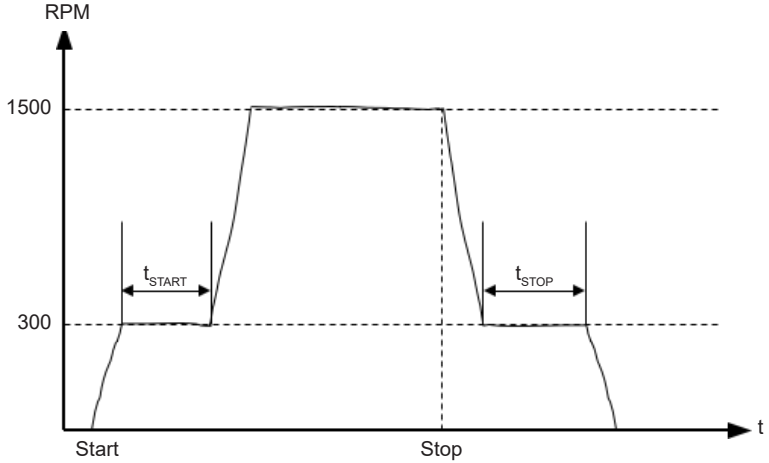

Idle speed, no stopping

In this example both timers are deactivated.

If the genset is to be prevented from stopping, then the digital input «temp control» must be left ON at all times. In that case the characteristic looks like this:

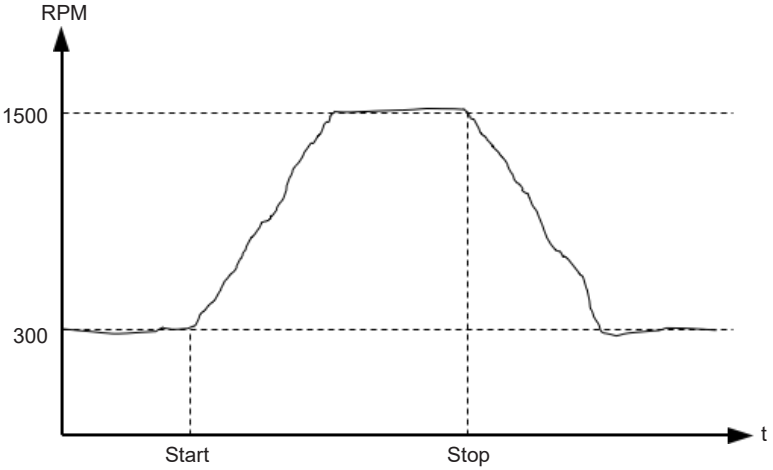

The oil pressure alarm (RMI oil) will be enabled during idle run if set to «ON».

8.9.4 - Inhibit

The alarms that are deactivated by the inhibit function are inhibited in the usual manner, except for the oil pressure alarms; RMI oil 6,7 and 8 which are active during «idle run» as well.

8.9.5 - Running signal

The running feedback must be activated when the genset is running in idle mode.

8.9.6 - Idle speed flowcharts

The flowcharts illustrate the starting and stopping of the genset by use of the inputs «temp control» and «low speed».

8.9.7 - Start

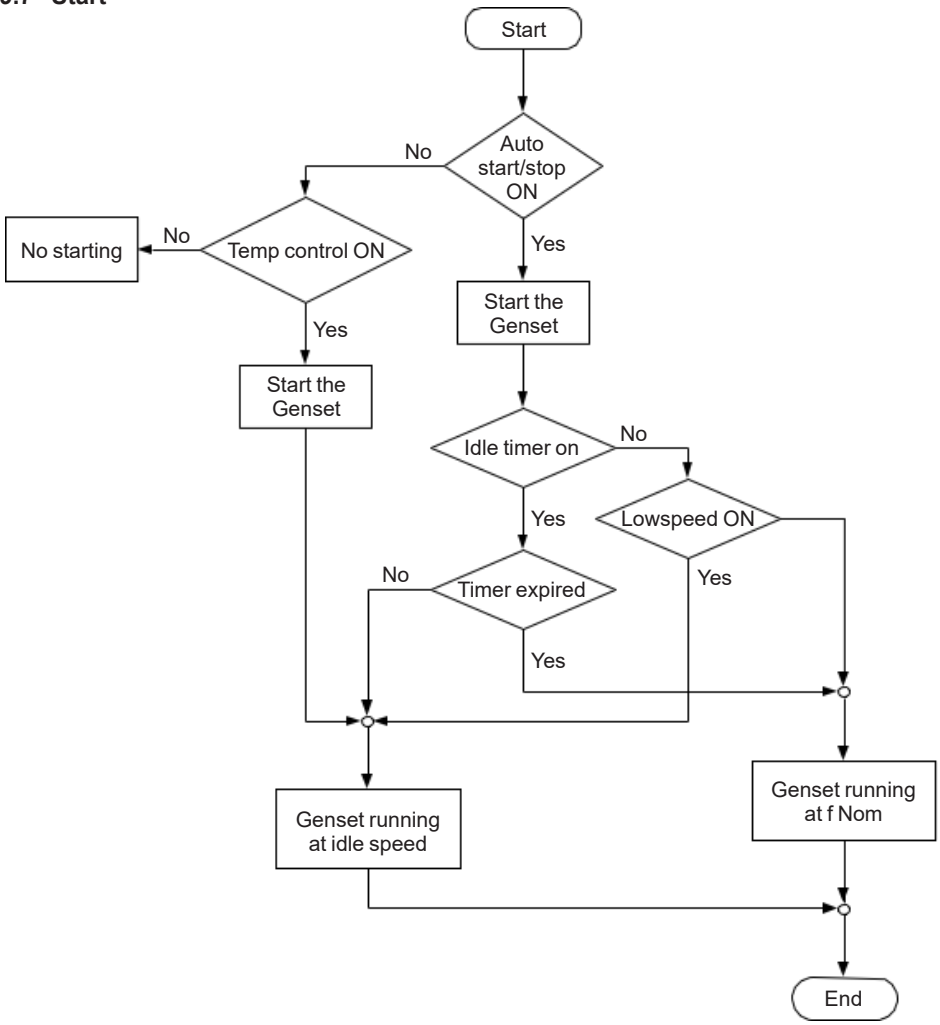

8.9.8 - Stop

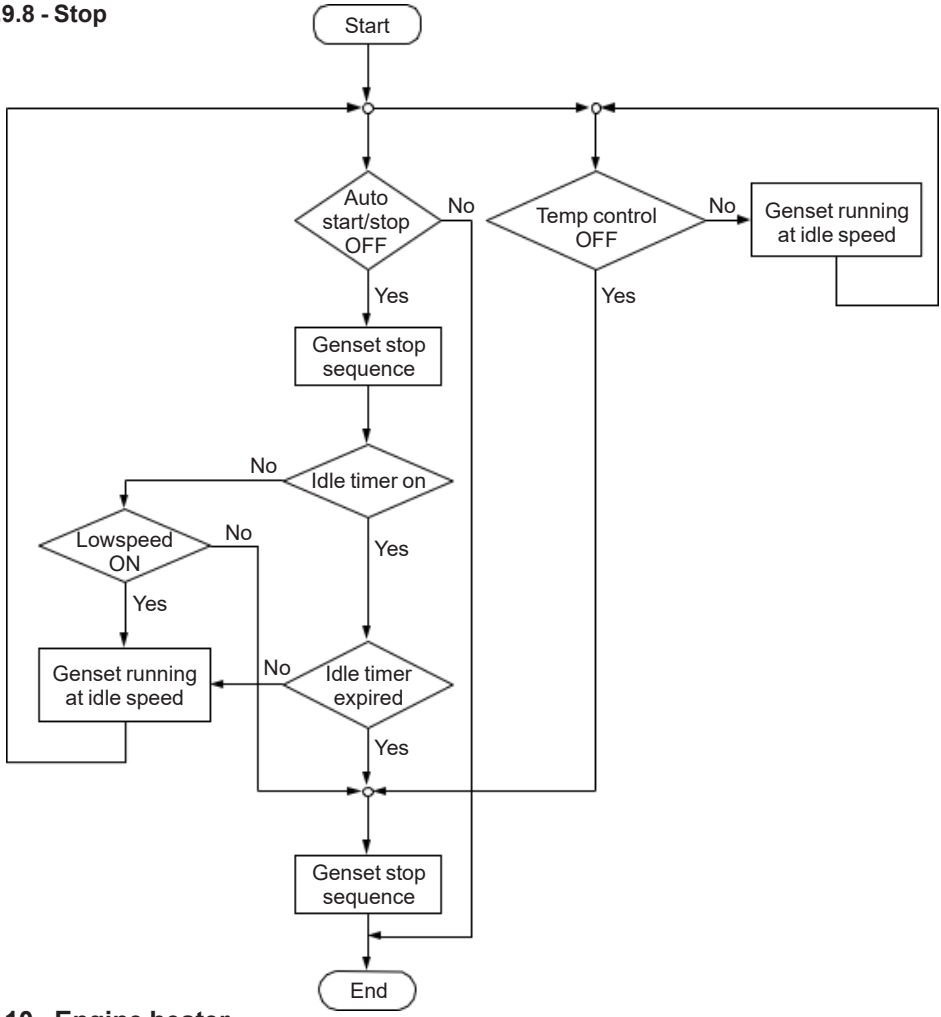

8.10 - Engine heater

This function is used to control the temperature of the engine. A sensor measuring the cooling water temperature is used to activate an external heating system to keep the engine at a minimum temperature.

The setpoints adjusted in menu 6320 are:

- Setpoint: this setpoint +/- the hysteresis is the start and stop points for the engine heater.
- Output A: the output for the engine heater.
- Input type: multi-input to be used for temperature measurement.
- Hysteresis: this decides how big a deviation from the setpoint is needed to activate/deactivate the engine heater.
- Enable: enables the engine heater function.

Principle diagram:

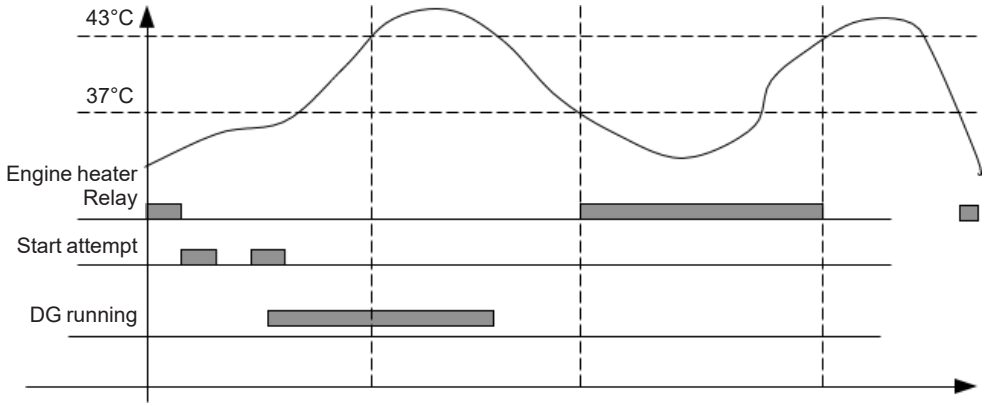

The engine heater function is only active when the engine is stopped.

8.10.1 - Engine heater alarm

If the temperature keeps dropping after the start setpoint has been exceeded, an alarm will be raised if configured in menu 6330.

8.11 - Ventilation

This function can be used to control the cooling of the engine. The purpose is to use a multi-input for measuring the cooling water temperature and that way activate an external ventilation system to keep the engine below a maximum temperature. The functionality is shown in the below diagram.

Setpoints available (6460 Max ventilation):

- Setpoint: the limit for activation of the output set in OA.
- Output A (OA): the output activated when the setpoint is exceeded.
- Hysteresis: the number of degrees the temperature has to be below the setpoint in order to deactivate the output set in OA.
- Enable: enable/disable the ventilation function.

The type of input to use for the temperature measurement is selected in menu 6323 Engine heater.

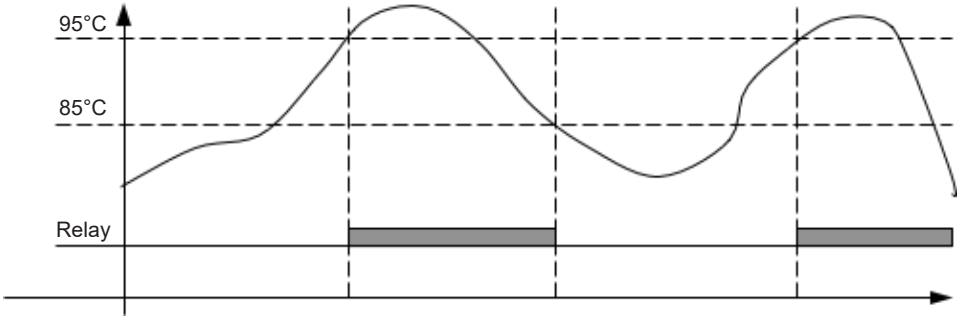

8.11.1 - Max. ventilation alarm

Two alarms can be set up in menu 6470 and menu 6480 to activate if the temperature keeps rising after the start setpoint has been reached.

8.12 - Fuel pump logic

The fuel pump logic is used to start and stop the fuel supply pump to maintain the fuel level in the service tank at predefined levels. The start and stop limits are detected from one of the multi-inputs.

Parameter	Name	Function
6551	Fuel pump log. start	Fuel transfer pump start point in percentage.
6552	Fuel pump log. stop	Fuel transfer pump stopping point in percentage.
6553	Fuel fill check	Delay timer before activating fuel fill check alarm.
6554	Output A	The output to be used for control of the fuel pump. The selected output activates below the start limit and deactivates above the stop level.
6555	Type	The multi-input or external analogue input to be used for the fuel level sensor. **Choose multi-input if 4-20 mA is used.** **Choose «auto detection» if an RMI is used.**
6556	Fail class	The fail class of the fuel fill alarm.

Setpoints available in menu 6550:

The fuel pump output can be activated via M-Logic.
The output should be configured as a «limit» output. Otherwise, an alarm will be raised when- ever the output is activated.

The below drawing shows how the fuel pump is activated when the level reaches 20% and stopped again when the level has reached 80%.

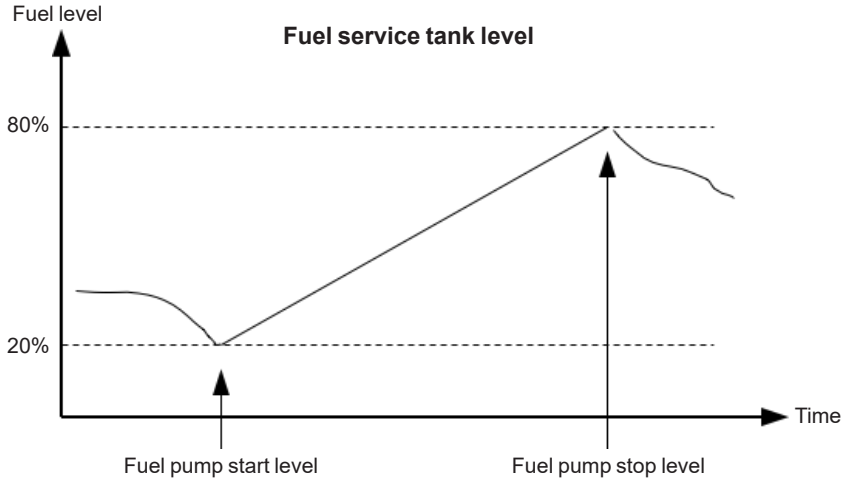

8.12.1 - Fuel fill check

The fuel pump logic includes a **Fuel fill check** function.

When the fuel pump is running, the fuel level must increase by 2% within the **fuel fill check** timer set in menu 6553. If the fuel level does not increase by 2% within the adjusted delay time, then the fuel pump output deactivates and a **Fuel fill alarm** occurs.

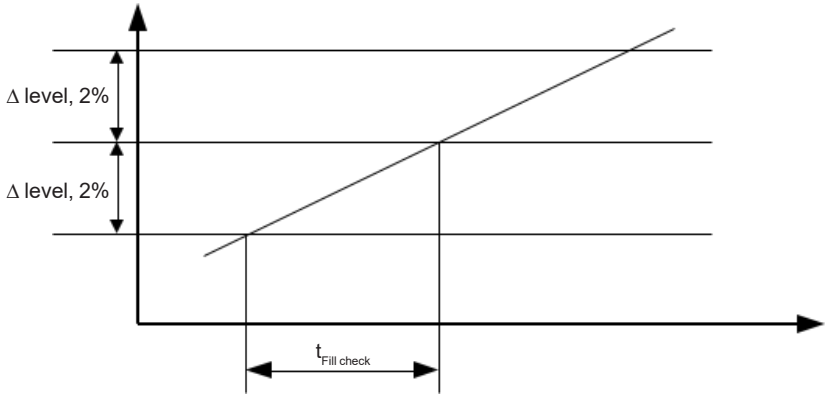

The level of increase is fixed at 2% and cannot be changed.

8.13 - Fail class

8.13.1 - Fail class

All activated alarms must be configured with a fail class. The fail classes define the category of the alarms and the subsequent alarm action.

Eight different fail classes can be used. The tables below illustrate the action of each fail class when the engine is running or stopped.

8.13.2 - Engine running

Fail class	Alarm horn	Alarm display	De-excite(3)	Trip of GB	Trip of MB	Cooling down genset	Stop genset
1 Block	X	X					
2 Warning	X	X					
3 Trip GB	X	X		X			
4 Trip + stop	X	X		X		X	X
5 Trip + stop + de-excite(1)	X	X	X	X		X	X
6 Shutdown	X	X		X			X
7 Trip MB(2)	X	X			X		
8 Trip MB/GB(2)	X	X		(X)	X		

ControlReg200/ControlReg200P

The table illustrates the action of the fail classes. If, for instance, an alarm has been configured with the «shutdown» fail class, the following actions occur.

- The alarm horn output will activate
- The alarm will be displayed in the alarm info screen
- The generator breaker will open instantly
- The genset is stopped instantly
- The genset cannot be started from the unit (see next table)

(1) Alarms configured with the failclass «Trip+stop+de-excite» cannot be removed before engine is stopped.

(2) The fail classes «Trip MB» and «Trip MB/GB» is only accessible on ControlReg200P.

The fail class «Trip MB/GB» will only trip the generator breaker if there is no mains breaker present.

(3) Excitation is deactivated as long as the alarm is present.

8.13.3 - Engine stopped

Fail class	Action	Block engine start	Block MB sequence	Block GB sequence
1 Block		X		
2 Warning				
3 Trip GB		X		X
4 Trip + stop		X		X
5 Trip + stop + de-excite		X		X
6 Shutdown		X		X
7 Trip MB(1)			X	
8 Trip MB/GB(1)		X(2)	X	X(2)

In addition to the actions defined by the fail classes, it is possible to activate one or two outputs if additional outputs are available in the unit.

(1) The fail classes «Trip MB» and «Trip MB/GB» is only accessible on ControlReg200P.

(2) The fail class «Trip MB/GB» will only block engine start and GB sequence if no mains breaker is present.

8.13.4 - Fail class configuration

The fail class can be selected for each alarm function either via the display or the PC software.

To change the fail class via the PC software, the alarm function to be configured must be selected. Select the desired fail class in the fail class drop-down panel.

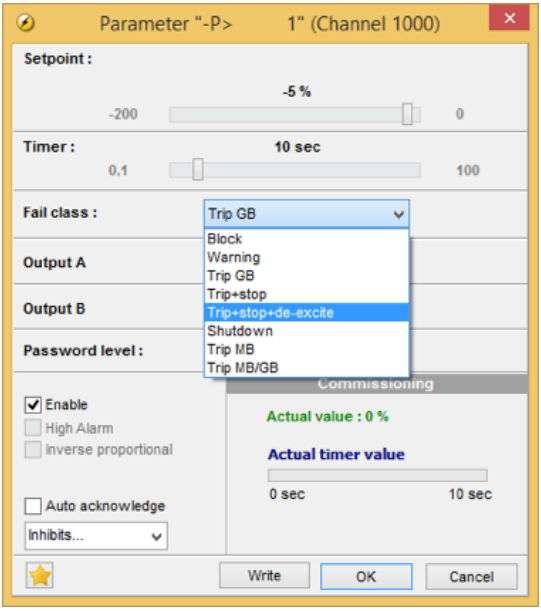

8.14 - Service timers

The unit is able to monitor the maintenance intervals. Two service timers are available to cover different intervals. The service timers are set up in menus 6110 and 6120.

The function is based on running hours. When the adjusted time expires, the unit will display an alarm. The running hours is counting when the running feedback is present.

Setpoints available in menus 6110 and 6120:

Enable: enable/disable the alarm function.

Running hours: the number of running hours to activate the alarm. The service timer alarm will be activated as soon as the running hours have been reached.

Day: the number of days to activate the alarm – if the running hours are not reached before this number of days, the alarm will still be activated. The service timer alarm will be activated at 8:00 AM on the day the alarm expires.

Fail class: the fail class of the alarm.

Output A: the output to be activated when the alarm is activated.

Reset: enabling this will reset the service timer to zero. This must be done when the alarm is activated.

8.15 - Digital inputs

The unit has a number of binary inputs, some of which are configurable and some are not.

	Input function	Auto	Test	Man	Block	Configurable	Input type
1	Shutdown override	X	X	X	X	Configurable	Constant
2	Access lock	X	X	X	X	Configurable	Constant
3	Binary running detection	X	X	X	X	Configurable	Constant
4	Remote start			X		Configurable	Pulse
5	Remote stop			X		Configurable	Pulse
6	Test	X		X	X	Configurable	Pulse
7	Auto		X	X	X	Configurable	Pulse
8	Manual		X		X	Configurable	Pulse
9	Block	X	X	X		Configurable	Constant
10	Remote GB ON			X		Configurable	Pulse
11	Remote GB OFF			X		Configurable	Pulse
12	Remote MB ON			X		Configurable	Pulse
13	Remote MB OFF			X		Configurable	Pulse
14	Remote alarm acknowledge	X	X	X	X	Configurable	Constant
15	Auto start/stop	X				Configurable	Constant
16	Remove starter	X	X	X		Configurable	Constant
17	GB position ON	X	X	X	X	Configurable	Constant
18	GB position OFF	X	X	X	X	Configurable	Constant
19	MB position ON	X	X	X	X	Configurable	Constant
20	MB position OFF	X	X	X	X	Configurable	Constant
21	Emergency stop	X	X	X	X	Not configurable	Constant
22	Low speed	X	X			Configurable	Constant
23	Temperature control	X	X			Configurable	Constant
24	GB close inhibit	X		X	X	Configurable	Constant
25	MB close inhibit	X	X	X	X	Configurable	Constant
26	GB spring loaded	X	X	X	X	Configurable	Constant
27	MB spring loaded	X	X	X	X	Configurable	Constant
28	Inhibit Engine alarms	X	X	X	X	Configurable	Constant
29	Digital(1)	X	X	X	X	Configurable	

(1) If an input terminal is set to be a binary input without being assigned an input, it will automatically be stated as «digital» in the «Config menu» when using the display.

ControlReg200/ControlReg200P

8.15.1 - Functional description

1. Shutdown override

This input deactivates all protections except the overspeed protection and the emergency stop input. When this input is activated, the number of start attempts is seven by default, but it can be configured in channel 6201. Also a special cool down timer, parameter 6202, is used in the stop sequence after an activation of this input.

Menu 6200 (shutdown override) is hidden until the function is chosen as an input.

2. Access lock

Activating the access lock input deactivates the control display push-buttons. It will only be possible to view measurements, alarms and the log.

3. Binary running detection

The input is used as a running indication of the engine. When the input is activated, the «start» output is deactivated.

4. Remote start

This input initiates the start sequence of the genset when manual mode is selected.

5. Remote stop

This input initiates the stop sequence of the genset when manual mode is selected.

6. Test

Changes the present running mode to test.

7. Auto

Changes the present running mode to auto.

8. Manual

Changes the present running mode to manual.

9. Block

Changes the present running mode to block.

When block mode is selected, the running mode cannot be changed by activating the digital inputs.

10. Remote GB ON

The generator breaker ON sequence will be initiated and the breaker will close if the MB is opened when manual mode is selected.

11. Remote GB OFF

The generator breaker OFF sequence will be initiated when manual mode is selected..

12. Remote MB ON

The mains breaker ON sequence will be initiated and the breaker will close if the GB is opened when manual mode is selected.

13. Remote MB OFF

The mains breaker OFF sequence will be initiated when manual mode is selected.

14. Remote alarm acknowledge

Acknowledges all present alarms, and the alarm LED on the display stops flashing.

15. Auto start/stop

The genset will start when this input is activated. The genset will be stopped if the input is deactivated. The input can be used when the unit is in island operation, load takeover and the AUTO running mode is selected.

16. Remove starter

The start sequence is deactivated. This means the start output deactivates, and the starter motor will disengage.

17. Generator breaker closed feedback (GB position ON)

The input function is used as an indication of the generator breaker position. The unit requires this feedback when the breaker is closed or a position failure alarm occurs.

18. Generator breaker open feedback (GB position OFF)

The input function is used as an indication of the generator breaker position. The unit requires this feedback when the breaker is opened or a position failure alarm occurs.

ControlReg200/ControlReg200P

19. Mains breaker closed feedback (MB position ON)

The input function is used as an indication of the mains breaker position. The unit requires this feedback when the breaker is closed or a position failure alarm occurs.

20. Mains breaker open feedback (MB position OFF)

The input function is used as an indication of the mains breaker position. The unit requires this feedback when the breaker is opened or a position failure alarm occurs.

21. Emergency stop

The input shuts down the engine immediately. At the same time it opens the generator breaker.

The shutdown fail class must be selected.

22. Low speed

Disables the regulators and keeps the genset running at a low RPM.

The governor must be prepared for this function.

23. Temperature control

This input is part of the idle mode function. When the input is high, then the genset starts. It starts at high or low speed, depending on the activation of the low speed input. When the input is deactivated, then the genset goes to idle mode (low speed = ON), or it stops (low speed = OFF).

24. GB close inhibit

When this input is activated, then the generator breaker cannot close. Inhibit used for GB, where ext. PLC or other equipment controls when load is on gen-set.

25. MB close inhibit

When this input is activated, then the mains breaker cannot close.

26. GB spring loaded

The controller will not send a close signal before this feedback is present.

27. MB spring loaded

The controller will not send a close signal before this feedback is present.

28. Inhibit EI alarms

When this input is active, it will inhibit all engine interface alarms.

The input functions are set up with the PC utility software, please refer to «Help» in this.

The default configuration of the multi inputs are like in the table below.

Multi input	Type	Function
14	Binary	Digital
15	Binary	Digital
16	Binary	Digital
17	Binary	Digital
18	Binary	Digital
19	Binary	Digital

8.16 - Outputs

The unit has a number of output functions which can be configured to any available output terminal.

	Output function	Auto	Test	Man	Block	Configurable	Output type
1	Status OK	X	X	X	X	Configurable	Constant
2	Run coil	X	X	X	X	Configurable	Constant
3	Stop coil	X	X	X	X	Configurable	Constant
4	Prepare	X	X	X	X	Configurable	Constant
5	Starter (Crank)	X	X	X	X	Configurable	Constant
6	Horn	X	X	X	X	Configurable	Constant
7	GB on	X	X	X	X	Configurable	Continuous
8	GB off	X	X	X	X	Configurable	Continuous
9	MB on(1)	X	X	X	X	Configurable	Continuous
10	MB off(1)	X	X	X	X	Configurable	Continuous
11	D+ (Battery charge)	X	X	X	X	Fixed	Constant

(1) The output functions «MB on» and «MB off» is only available with ControlReg200P.

8.16.1 - Functional description

1. Status OK
The output configured to «Status OK» is active as long as the device is working properly.

2. Run Coil
The output configured to «Run coil» will be closed the entire time the engine is supposed to run.

3. Stop Coil
This output will close to stop the engine, and when no running feedback is present, it will stay closed in the ext. stop time (parameter 6212).

4. Prepare
This function will activate the output as the first thing in the start sequence. The output will be active for the time programmed in parameter 6181. This function is used for preheating the engine or for prelubrication.

5. Starter (Crank)
The output configured to «starter» will be active for the time selected in parameter 6183 in the start sequence.

6. Horn
The «horn» output is a common alarm output. This means that every time an alarm state appears, the horn output will be active for the time configured in the parameter 6131 «Alarm horn», regardless of fail class. If 6131 is set to 0 seconds, it will be active until the reset horn push-button is activated or the alarm(s) has (have) been acknowledged.

7. GB on
The function will close the generator breaker.

8. GB off
This function will open the generator breaker.

9. MB on (ControlReg200P only)
This function will close the mains breaker.

10. MB off (ControlReg200P only)
This function will open the mains breaker.

11. D+ (Battery charge)
D+ is the activation of the battery charge alternator. When running feedback is present, this is no longer an output but a feedback for battery charge.

Table of default output settings:

Output	Function
7	Starter (crank)
8	Run coil
9	GB ON
10	Not used
11	Not used
D+	Battery charge activation/feedback

8.17 - Multi-inputs

8.17.1 - Multi-inputs

The ControlReg unit has six multi-inputs which can be configured to be used as the following input types:

1. 4-20 mA
2. Pt100
3. Pt1000
4. RMI oil pressure
5. RMI water temperature
6. RMI fuel level
7. Binary

The configuration of the function of each for multi-inputs is done using the «config menu» on the display, or in the «USW» tab in the PC tool. The channel numbers used are following the below table.

Input number	Channel
Multi-input 14	10980
Multi-input 15	10990
Multi-input 16	11000
Multi-input 17	11300
Multi-input 18	11310
Multi-input 19	11160

For each input, two alarm levels are available, the menu numbers of the alarm settings for each multi-input is controlled by the configured input type as seen in the following table.

Type	Multi input 14	Multi input 15	Multi input 16	Multi input 17	Multi input 18	Multi input 19
4-20mA	4120/4130	4250/4260	4380/4390	4740/4750	4770/4780	4800/4810
PT100/1000	4160/4170	4290/4300	4420/4430	4740/4750	4770/4780	4800/4810
RMI oil	4180/4190	4310/4320	4440/4450	4740/4750	4770/4780	4800/4810
RMI water	4200/4210	4330/4340	4460/4470	4740/4750	4770/4780	4800/4810
RMI fuel	4220/4230	4350/4360	4480/4490	4740/4750	4770/4780	4800/4810
Binary	3400	3410	3420	3430	3440	3450

Only one alarm level is available for the binary input type.

8.17.2 - 4-20 mA

If one of the multi-inputs has been configured as 4-20 mA, the unit range of the measured value corresponding to 4-20 mA can be changed in the PC utility software in order to get the correct reading in the display.

The ControlReg200 handles an overcurrent protection for the multi-inputs. If configured as 4-20 mA, and the current flow is above 24 mA, the input will automatically switch to resistive mode, in order to protect the HW.

If the current seen from the unit reaches this level, an alarm will be displayed. The text will be «Multi input HW limit», but no channel will be used. The alarm is raised when any of the multi-inputs has raised the level of destruction for current.

8.17.3 - Pt100/Pt1000

This input type can be used for heat sensor, e.g. cooling water temperature. The unit of the measured value can be changed from Celsius to Fahrenheit in the PC utility software in order to get the desired reading in the display.

Offset parameter is used for compensation of wire resistance.

8.17.4 - RMI inputs

The unit can contain up to 6 RMI (resistance measurement input). The inputs have different functions, as the hardware design allows for several RMI types.

RMI is a resistance measurement input which can be used together with a resistance dependent sensor. These various types of RMI are available for all multi-inputs:

- RMI oil: oil pressure
- RMI water: cooling water temperature
- RMI fuel: fuel level sensor

For each of the RMI functions, it is possible to select between different characteristics including a configurable one.

8.17.5 - RMI oil

This RMI input is used for measuring the lubricating oil pressure.

- Sensor type 1 = VDO
- Sensor type 2 = VDO

ControlReg200/ControlReg200P

- Sensor type 4 = ESP-100

		RMI sensor type				
Pressure		Type 1	Type 2	Type 3	Type 4	Configurable RMI
Bar	psi	Ω	Ω	Not used	Ω	Ω
0	0	10.0	10.0		240	
0.5	7	27.2				
0.7	10				200	
1.0	15	44.9	31.3			
1.4	20				165	
1.5	22	62.9				
2.0	29	81.0	51.5			
2.1	30				135	
2.5	36	99.2				
2.8	40				123	
3.0	44	117.1	71.0			
3.4	50				103	
3.5	51	134.7				
4.0	58	151.9	89.6			
4.1	60				88	
4.5	65	168.3				
4.8	70				74	
5.0	73	184.0	107.3			
5.5	80				60	
6.0	87		124.3			
6.2	90				47	
6.9	100				33	
7.0	102		140.4			
8.0	116		155.7			
9.0	131		170.2			
10.0	145		184.0			

The configurable type is configurable with eight points in the range 0-2500 Ω. The resistance as well as the pressure can be adjusted.

If the RMI input is used as a level switch, then be aware that no voltage must be connected to the input. If any voltage is applied to the RMI inputs, it will be damaged. Please refer to the Application Notes for further wiring information.

8.17.6 - RMI water

This RMI input is used for measuring the cooling water temperature.
- Sensor type 1 = VDO
- Sensor type 2 = VDO
- Sensor type 3 = VDO
- Sensor type 4 = EST-250

		RMI sensor type				
Temperature		Type 1	Type 2	Type 3	Type 4	Configurable RMI
°C	°F	Ω	Ω	Ω	Ω	Ω
0	32				7208	
10	50				4115	
20	68				2529	
30	86				1594	
40	104	291.5	480.7	69.3	1029	
50	122	197.3	323.6		680	
60	140	134.0	222.5	36.0	460	
70	158	97.1	157.1		321	
80	176	70.1	113.2	19.8	227	
90	194	51.2	83.2		164	
100	212	38.5	62.4	11.7	120	
110	230	29.1	47.6		89	
120	248	22.4	36.8	7.4	74	
130	266		28.9		52	
140	284		22.8		40	
150	302		18.2			

The configurable type is configurable with eight points in the range 0-2500 Ω. The temperature as well as the resistance can be adjusted.

If the RMI input is used as a level switch, then be aware that no voltage must be connected to the input. If any voltage is applied to the RMI inputs, it will be damaged. Please refer to the Application Notes for further wiring information.

8.17.7 - RMI fuel

This RMI input is used for the fuel level sensor.
- Sensor type 1 = VDO
- Sensor type 2 = VDO
- Sensor type 4 = ESF

	RMI sensor type				
Fuel level	**Type 1**	**Type 2**	**Type 3**	**Type 4**	**Configurable RMI**
%	**Ω**	**Ω**	Not used	**Ω**	
0	78.8	3		240	
25				147	
50				103	
75				60	
100	1.6	180		33	

If the RMI input is used as a level switch, then be aware that no voltage must be connected to the input. If any voltage is applied to the RMI inputs, it will be damaged.

The configurable type is configurable with eight points in the range 0-2500 Ω. The value as well as the resistance can be adjusted.

8.17.8 - Illustration of configurable inputs

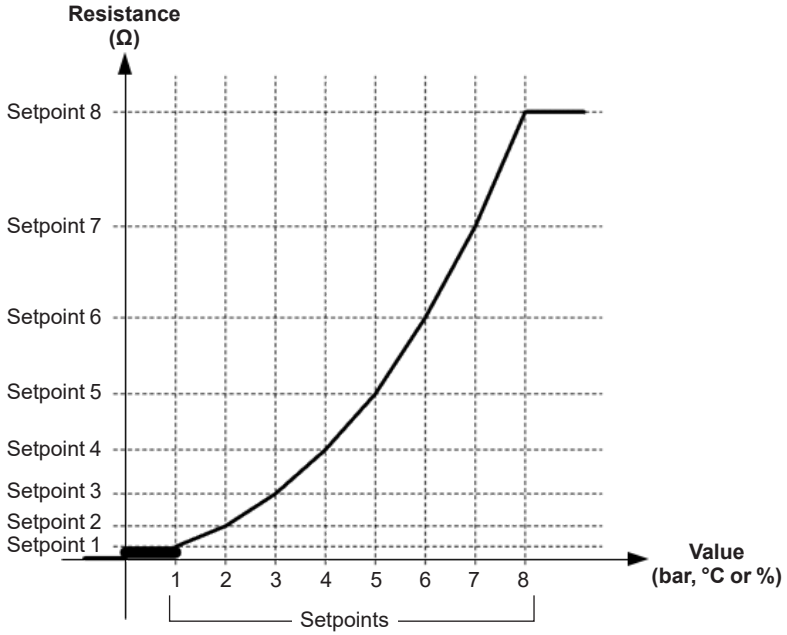

8.17.9 - Configuration

The eight curve settings for the configurable RMI inputs cannot be changed in the display, but **only** in the PC utility software. In the PC utility software the configurable inputs are adjusted in the tab regarding the actual RMI-input.

The screenshot below illustrates an example of values for the eight configurable points on the configurable curve for RMI 14.

Category	Chan	Text	Address	Value	Unit	Timer	OutputA	OutputB	Enable	HighAlar	Level	FailClass
RMI 14	10460	RMI 14 type	746	3		N/A	N/A	N/A			customer	N/A
RMI 14	10470	RMI 14 Inp. Setp. 1	747	10	ohm	N/A	N/A	N/A			customer	N/A
RMI 14	10480	RMI 14 Outp. Setp. 1	755	40		N/A	N/A	N/A			customer	N/A
RMI 14	10490	RMI 14 Inp. Setp. 2	748	44.9	ohm	N/A	N/A	N/A			customer	N/A
RMI 14	10500	RMI 14 Outp. Setp. 2	756	50		N/A	N/A	N/A			customer	N/A
RMI 14	10510	RMI 14 Inp. Setp. 3	749	81	ohm	N/A	N/A	N/A			customer	N/A
RMI 14	10520	RMI 14 Outp. Setp. 3	757	60		N/A	N/A	N/A			customer	N/A
RMI 14	10530	RMI 14 Inp. Setp. 4	750	134.7	ohm	N/A	N/A	N/A			customer	N/A
RMI 14	10540	RMI 14 Outp. Setp. 4	758	80		N/A	N/A	N/A			customer	N/A
RMI 14	10550	RMI 14 Inp. Setp. 5	751	184	ohm	N/A	N/A	N/A			customer	N/A
RMI 14	10560	RMI 14 Outp. Setp. 5	759	100		N/A	N/A	N/A			customer	N/A
RMI 14	10570	RMI 14 Inp. Setp. 6	752	200	ohm	N/A	N/A	N/A			customer	N/A
RMI 14	10580	RMI 14 Outp. Setp. 6	760	110		N/A	N/A	N/A			customer	N/A
RMI 14	10590	RMI 14 Inp. Setp. 7	753	210	ohm	N/A	N/A	N/A			customer	N/A
RMI 14	10600	RMI 14 Outp. Setp. 7	761	115		N/A	N/A	N/A			customer	N/A
RMI 14	10610	RMI 14 Inp. Setp. 8	754	220	ohm	N/A	N/A	N/A			customer	N/A
RMI 14	10620	RMI 14 Outp. Setp. 8	762	120		N/A	N/A	N/A			customer	N/A

Both parameters (input and output) for each of the eight points can be individually adjusted. Adjust the input resistance value to fit the desired output value for each eight points.

The configurable sensor type is only available for multi-input 14, 15 and 16.

8.17.10 - Scaling of 4-20 mA inputs

The scaling of the analogue inputs is made to ensure that the readout of the inputs is made with a resolution that fits the connected sensor. It is recommended to follow the guide below when changing the scaling of the analogue inputs.

Scaling example:

1. Use the utility software to configure a multi-input to be 4-20 mA, in this example multi-input 14 (parameter 10980).
2. Read the parameters from the device.

3. After reading the parameters, the 4-20 mA alarm appears in the «analogue» tab in the USW. The example below shows how to adjust the analogue input alarm.

The three dots to the left of the figures, marked with arrows, are buttons. Adjust the input as required, e.g. 0-5 bar:

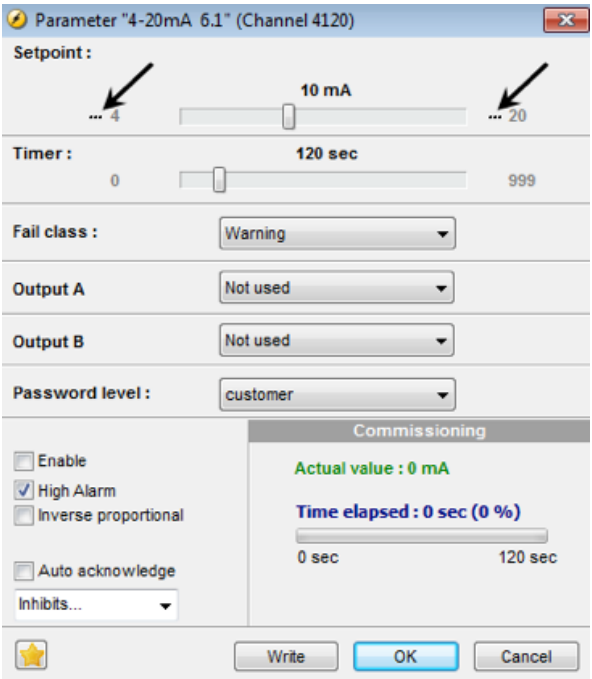

4. Adjust the input as required, e.g. 0-5 bar:

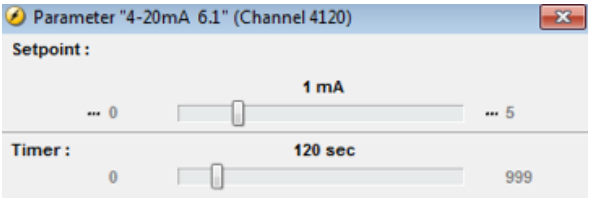

The display will then show 0 at 4 mA.

5. If needed, it is possible to scale the input to fit the sensor (Parameter 11010).

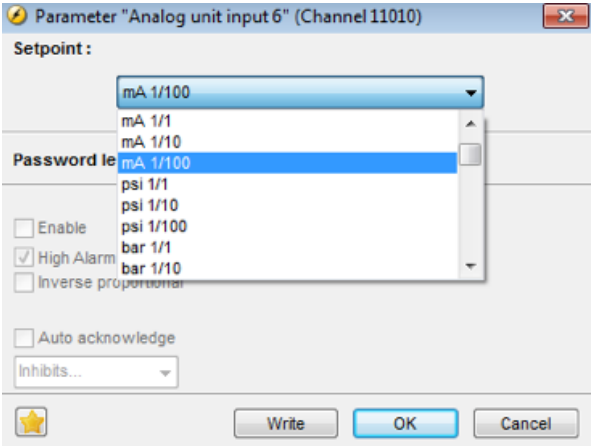

6. It is necessary to read the parameters from the device to the computer after changing the scale (1/1, 1/10 or 1/100) settings. This is in order to refresh the parameter list so the alarm settings present the correct value.

7. After reading the parameters, the alarm has been scaled so it needs to be adjusted (0-5 in this example), and this is also a scaling of the value on the display.

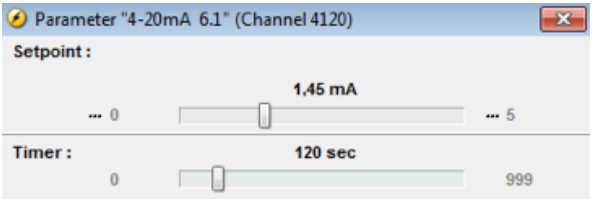

The display will now show the scaled value of multi-input 6.
In the example shown above, the value can be adjusted with two decimals. If the parameters were not refreshed, it would still only be possible to adjust the setpoint without decimals.

Save the parameter file:
After having set up the 4-20 mA inputs (HW as well as alarms), the parameter file should be uploaded from the device to the PC and then saved. In this way, the settings will not be modified again if the parameters are reloaded to the device.

8.17.11 - Binarys

If the multi-inputs are configured to «Binary», they become available as binary inputs.

8.18 - Input function selection

Digital input alarms can be configured with a possibility to select when the alarms are to be activated. The possible selections of the input function are normally open or normally closed. In the USW this will be handled with a checkmark in the tick-box «high alarm». A checkmark in the «high alarm»-box is equal to the input function «NO» and if the box is unchecked, the input function will be «NC».

ControlReg200/ControlReg200P

The drawing below illustrates a digital input used as an alarm input.

1. Digital input alarm configured to NC, normally closed.
   This will initiate an alarm when the signal on the digital input disappears.
2. Digital input alarm configured to NO, normally open.
   This will initiate an alarm when the signal on the digital input appears.

The output function can be selected to be ND (Normally De-energized), NE (Normally Energized), Limit or Horn.

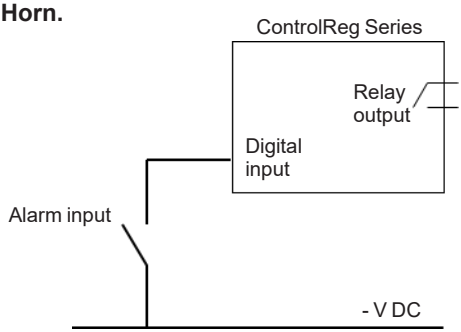

8.19 - Wire fail detection

If it is necessary to supervise the sensors/wires connected to the multi-inputs, then it is possible to enable the wire break function for each input. If the measured value on the input is outside the normal dynamic area of the input, it will be detected as if the wire has made a short-circuit or a break. An alarm with a configurable fail class will be activated.

Input	Wire failure area	Normal range	Wire failure area
4-20 mA	< 4 mA	4-20 mA	> 20 mA
Pt100	< 82.3 ohm	-	> 194.1 ohm
Pt1000	< 823 ohm	-	> 1941 ohm
RMI Oil, type 1	< 1 ohm	-	> 195 ohm
RMI Oil, type 2	< 1 ohm	-	> 195 ohm
RMI Oil, type 3	-	Not implemented	-
RMI Oil, type 4	< 33 ohm	-	> 240 ohm
RMI Temp, type 1	< 4 ohm	-	> 488 ohm
RMI Temp, type 2	< 4 ohm	-	> 488 ohm
RMI Temp, type 3	< 0.6 ohm	-	> 97 ohm
RMI Temp, type 4	< 40 ohm	-	> 7208 ohm
RMI Fuel, type 1	< 0.6 ohm	-	> 97 ohm
RMI Fuel, type 2	< 1 ohm	-	> 195 ohm
RMI Fuel, type 3	-	Not implemented	-
RMI Fuel, type 4	< 33 ohm	-	> 240 ohm
RMI configurable	< lowest resistance	-	> highest resistance
Level switch	Only active if the switch is open		
Binary input	Only active if the wire is broken, does not work for a short circuit		

Principle

The illustration below shows that when the wire of the input breaks, the measured value will drop to zero. Then the alarm will occur.

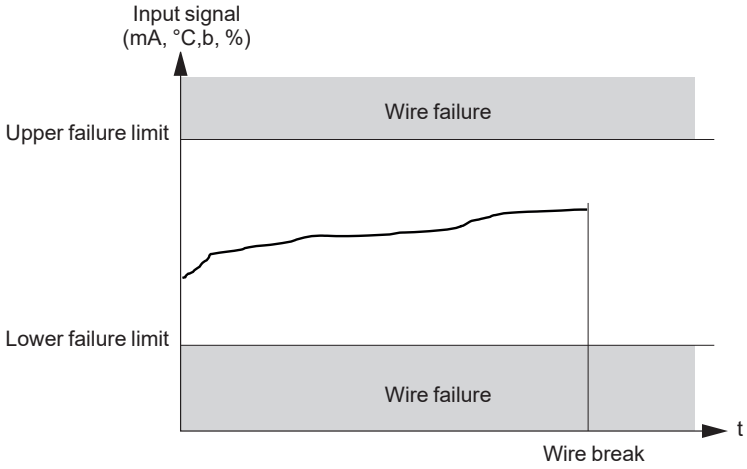

For any analogue inputs, it is possible to choose whether the wire fail detection is active only in the event of «open circuit», «short circuit» or if it should be active in both events.

8.20 - Language selection

The unit has the possibility to display different languages. It is delivered with one master language which is English. This is the default language, and it cannot be changed. In addition to the master language, three different languages can be configured. This is done via «translations» in the PC utility software.

When the languages are configured with the USW, they can be selected in the system setup menu 6080. It is not possible to make language configuration from the display, but the already configured languages can be selected.

8.21 - Text in status line

This table explains the different messages in the status line text.

8.21.1 - Standard texts

Condition	Comment	
BLOCK	Block mode is activated	
FULL TEST	Test mode is activated	
FULL TEST ###.#min	Test mode activated and test timer counting down	
ISLAND MAN	Genset stopped or running and no other action taking place	
READY ISLAND AUTO	Genset stopped in Auto	
ISLAND ACTIVE	Genset running in Auto	
AMF MAN	Genset stopped or running and no other action taking place	
READY AMF AUTO	Genset stopped in Auto	
AMF ACTIVE	Genset running in Auto	
LOAD TAKEOVER MAN	Genset stopped or running and no other action taking place	
READY LTO AUTO	Genset stopped in Auto	
LTO ACTIVE	Genset running in Auto	
DG BLOCKED FOR START	Generator stopped and active alarm(s) on the generator	
GB ON BLOCKED	Generator running, GB open and an active "Trip GB" alarm	
SHUTDOWN OVER-RIDE	The configurable input is active	
ACCESS LOCK	The configurable input is activated, and the operator tries to activate one of the blocked keys	
GB TRIP EXTERNALLY	Some external equipment has tripped the breaker	An external trip is logged in the event log
MB TRIP EXTERNALLY	Some external equipment has tripped the breaker	An external trip is logged in the event log
IDLE RUN	The "Idle run" function is active. The genset will not stop until a timer has expired	
IDLE RUN ###.#min	The timer in the "Idle run"' function is active	
START PREPARE	The start prepare output is activated	
START RELAY ON	The start output is activated	
START RELAY OFF	The start output is deactivated during the start sequence	
MAINS FAILURE	Mains failure and mains failure timer expired	

Condition	Comment	
MAINS FAILURE IN ###s	Frequency or voltage measurement is outside the lim- its	The timer shown is the Mains failure delay. Text in mains units
MAINS U OK DEL ####s	Mains voltage is OK after a mains failure	The timer shown is the Mains OK delay
MAINS f OK DEL ####s	Mains frequency is OK after a mains failure	The timer shown is the Mains OK delay
Hz/V OK IN ###s	The voltage and frequency on the genset is OK	When the timer runs out it is allowed to operate the generator breaker
COOLING DOWN ###s	Cooling-down period is activated	
COOLING DOWN	Cooling-down period is activated and infinite	Cooling down timer is set to 0.0 s
GENSET STOPPING	This info is shown when cooling down has finished	
EXT. STOP TIME ###s		

8.22 - Counters

Counters for various values are included, and some of these can be adjusted if necessary, for instance if the unit is installed on an existing genset or a new circuit breaker has been installed.

The table shows the adjustable values and their function in menu 6100:

Description	Function	Comment
6101 Running time	Offset adjustment of the total running hours counter	Counting when the running feedback is present
6102 Running time	Offset adjustment of the total running thousand hours counter	Counting when the running feedback is present
6103 GB operations	Offset adjustment of the number of generator breaker operations	Counting at each GB close command
6104 MB operations	Offset adjustment of the number of mains breaker operations	Counting at each MB close command
6105 kWh reset	Resets the kWh counter	Automatically resets to OFF after the reset. The reset function cannot be left active.
6106 Start attempts	Offset adjustment of the number of start attempts	Counting at each start attempt

Additional counters for «Running hours» and «Energy» can be read out from the PC utility software.

8.23 - M-Logic

The M-Logic functionality is included in the unit and is not an option-dependent function.

M-Logic is used to execute different commands at predefined conditions. M-Logic is not a PLC but substitutes one, if only very simple commands are needed.

M-Logic is a simple tool based on logic events. One or more input conditions are defined, and at the activation of those inputs, the defined output will occur. A great variety of inputs can be selected, such as digital inputs, alarm conditions and running conditions. A variety of the outputs can also be selected, such as digital outputs, change of genset modes and change of running modes.

The M-Logic is part of the PC utility software, and as such, it can only be configured in the PC Utility software and not via the display. Please see the M-Logic manual.

The main purpose of M-Logic is to give the operator/designer more flexible possibilities of operating the generator control system.

Please refer to the «Help» function in the PC utility software for a full description of this configuration tool.

8.24 - Buzzer

The ControlReg200 has a built-in buzzer. The buzzer is configured in M-Logic. This means that if the buzzer is going to be used as a horn annunciator, the input must be set to «Horn» and the output must be set to «Buzzer». The buzzer will act concurrently to the horn output timer. If the delay timer in M-Logic is used, the buzzer will be active after this time delay.

8.25 - USW communication

It is possible to communicate with the unit via the PC utility software. The purpose is to be able to remote-monitor and control the genset application.

Application settings
Please refer to the PC utility software help file.

Safety
If communication fails, the unit will operate according to the received data. If e.g. only half of the parameter file has been downloaded when the communication is interrupted, the unit will use this actual data.

8.26 - Nominal settings

8.26.1 - How to change the nominal settings

The nominal settings can be changed to match different voltages and frequencies. The controller has four sets of nominal values for the generator, and they are adjusted in menus 6000 to 6030 (Nominal settings 1 to 4). There are also two sets of nominal settings for the busbar, they can be adjusted in menus 6050 to 6060.

If no busbar voltage transformer is present, then set the primary and secondary side values to the same value as generator nominal value.

The possibility to switch between the four sets of nominal setpoints is typically used on rental gensets, where switching between 50 and 60 Hz is required.

Activation
The switching between the nominal setpoints can be done in two ways; digital input or menu 6006.

Binary input
M-Logic is used when a binary input is needed for switching between the four sets of nominal settings. Select the required input among the input events, and select the nominal settings in the outputs.

Example:

Event A		Event B		Event C	Output
Dig. input no.14	or	Not used	or	Not used	Set nom. parameter settings 1
Not Dig. input no.14	or	Not used	or	Not used	Set nom. parameter settings 2

Menu settings

In menu 6006 the switching is made between settings 1 to 4 simply by choosing the desired nominal setting.

8.27 - Scaling

Default voltage scaling is set to range 100 V-25000 V (menu 9030). To be able to handle applications above 25000 V and below 100 V, it is necessary to adjust the input range so it matches the actual value of the primary voltage transformer. This makes it possible to support a wide range of voltage and power values.
Setup of the scaling can be done in menu 9030 from the display.

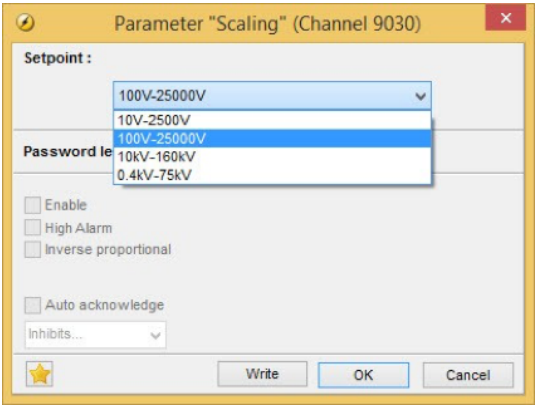

Changing the voltage scaling will also influence the nominal power scaling:

Scaling parameter 9030	Nom. settings 1 to 4 (power) will change according to parameter 9030	Nom. settings 1 to 4 (voltage) will change according to parameter 9030	Transformer ratio settings parameter 6041, 6051 and 6053
10 V-2500 V	1.0-900.0 kW	10.0 V-2500.0 V	10.0 V-2500.0 V
100 V-25000 V	10-20000 kW	100 V-25000 V	100 V-25000 V
0.4 kV-75 kV	0.10-90.00 MW	0.4 kV-75.00 kV	0.4 kV-75.00 kV
10 kV-160 kV	1.0-900.0 MW	10.0 kV-160.0 kV	10.0 kV-160.0 kV

All nominal values and the primary VT settings must be corrected after the scaling has been changed in menu 9030.

8.28 - Differential measurement

With the differential measurement function it is possible to compare two analogue inputs and trigger on the difference between the two values.

If the differential function is for example air filter check, the timer will be activated if the setpoint between PA (analogue A) and PB (analogue B) is exceeded. If the differential value drops below the setpoint value before the timer runs out, then the timer will be stopped and reset.

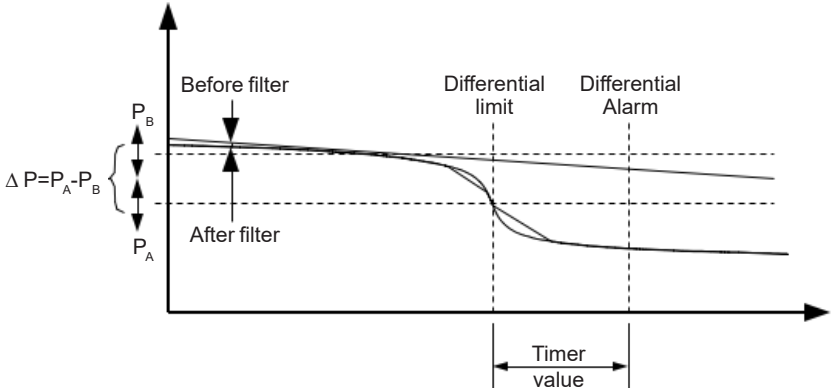

Three different differential measurements between two analogue input values can be configured. Differential measurements between two sensors can be configured in menus 4600-4606. As an example the figure below shows the two parameters for input selection for differential measurement 1.

Ain	4601	Delta ana1 InpA	1482	4	
Ain	4602	Delta ana1 InpB	1483	4	

Inputs are selected from the input list as shown below, available inputs are:
- Multi inputs
- EIC measurements

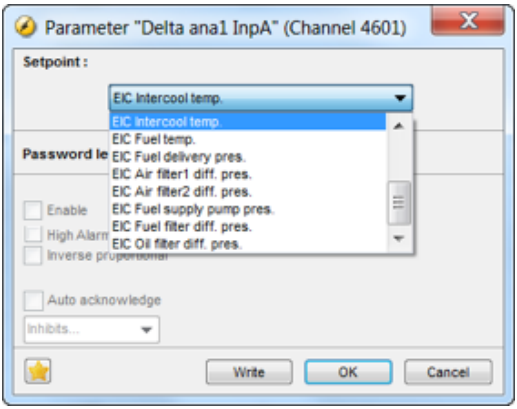

The relevant alarm setpoint is chosen in parameters 4610-4660. Each alarm can be configured in two alarm levels for each differential measurement between analog input A and input B.
Below figure shows the two parameters to configure alarm level 1 and 2, for differential measurement 1.

Ain	4610	Delta ana1	1	1488	1	
Ain	4620	Delta ana1	2	1489	1	

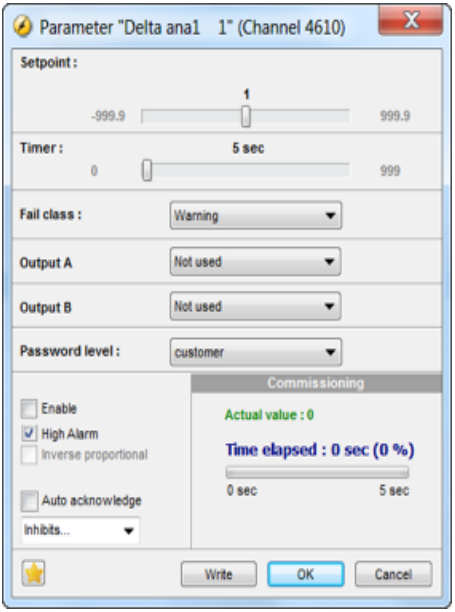

8.29 - Filename extension

The filename extension for ControlReg200 products are .2cr

It will be possible to update the firmware using the utility software and use the normal procedure. For more information, please refer to online documentation.

9 - PROTECTIONS

9.1 - General

The protections are all of the definite time type, i.e. a setpoint and time is selected.

If the function is e.g. overvoltage, the timer will be activated if the setpoint is exceeded. If the voltage value falls below the setpoint value before the timer runs out, then the timer will be stopped and reset.

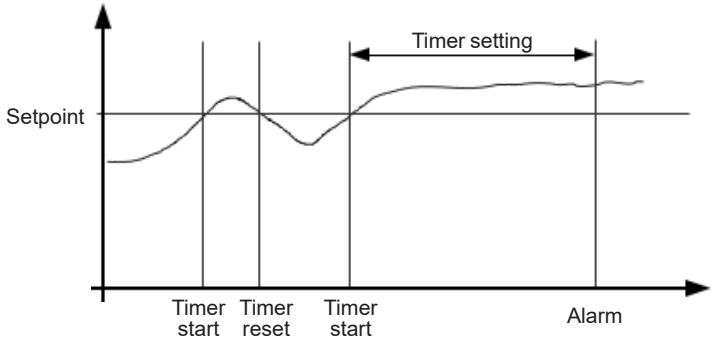

When the timer runs out, the output is activated. The total delay will be the delay setting + the reaction time.

When parameterizing the controller, the measuring class of the controller and an adequate «safety» margin has to be taken into consideration.

Example:

A power generation system must not reconnect to a network when the voltage is 85% of Un +/-0% < U < 110% +/-0%. In order to ensure reconnection within this interval, a control unit's tolerance/accuracy has to be taken into consideration. It is recommended to set a control unit's setting range 1-2% higher/lower than the actual setpoint if the tolerance of the interval is +/-0% to ensure that the power system does not reconnect outside the interval.

Phase-phase voltage trip

The voltage alarms are working based on phase-phase measurements. It is not possible to select phase-neutral measurements.

The overcurrent level is limited to 200% of the nominal current. Therefore it cannot be considered as a short-circuit protection.

ControlReg200/ControlReg200P

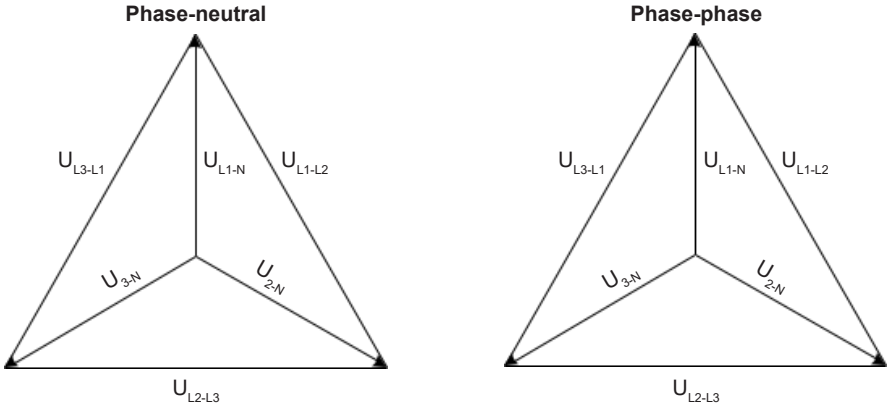

As indicated in the vector diagram, there is a difference in voltage values at an error situation for the phase- neutral voltage and the phase-phase voltage.
The table shows the actual measurements at a 10% undervoltage situation in a 400/230 volt system.

	Phase-neutral	Phase-phase
Nominal voltage	**400/230**	**400/230**
Voltage, 10% error	380/**207**	**360**/185

The alarm will occur at two different voltage levels, even though the alarm setpoint is 10% in both cases.
Example : the below 400V AC system shows that the phase-neutral voltage must change 20%, when the phase-phase voltage changes 40 volts (10%).

Example:
U_{NOM} = 400/230V AC

Error situation:
U_{L1L2} = 360V AC
U_{L3L1} = 360V AC
U_{L1-N} = 185V AC
ΔU_{PH-N} = 20%

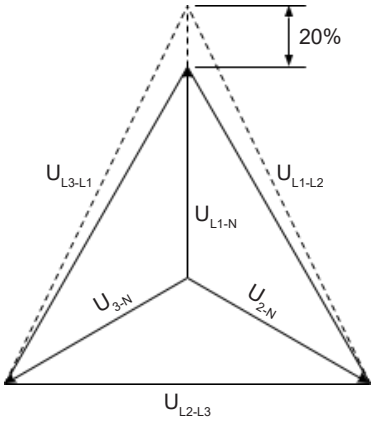

Both the generator protections and the busbar/mains protections use phase-phase voltage.

9.2 - Voltage-dependent (restraint) overcurrent

This protection is used when the generator must be tripped due to a fault situation that creates a reduced generator voltage, e.g. a voltage collapse.

During the voltage collapse, the generator can only produce part of its usual rating. A short-circuit current during a voltage collapse can even be lower than the nominal current rating.

The protection will be activated based on the overcurrent setpoint as a function of the measured voltage on the generator voltage terminals.

The result can be expressed as a curve function where the voltage setpoints are fixed values and the current setpoints can be adjusted (menu 1100). This means that if the voltage drops, the overcurrent setpoint will also drop.

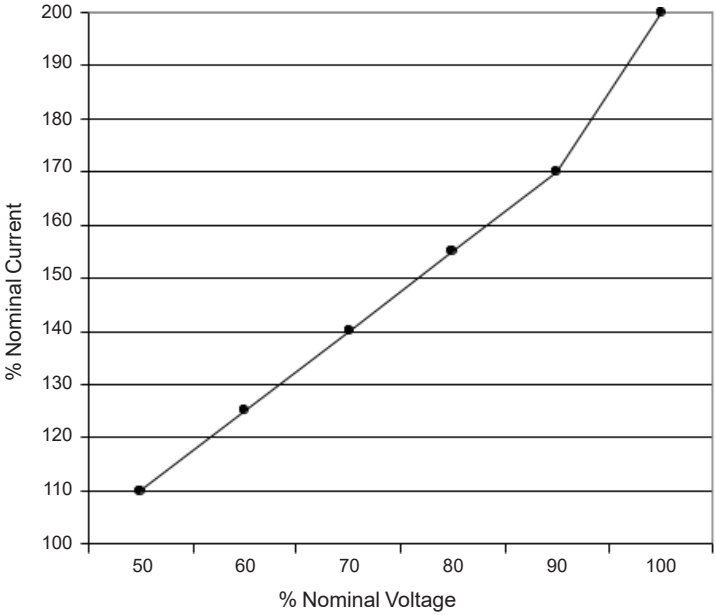

The voltage values for the six points on the curve are fixed; the current values can be adjusted in the range 50-200%.

Voltage and current % values refer to the nominal settings.

Timer value can be adjusted in the range 0.1- 60.0 sec.

10 - PARAMETERS LIST

This documents is relative to the parameters 1000-1990, 2010-2790, 3000-3610, 4120-4970, 5000-5070, 6000-6990, 7000-7680, 9000-9150.

For further information, please see the separate document dealing with the parameters list ref. 5346 availabe on Leroy Somer webpage.

11 - MOUNTING

The unit is designed for flush mounting by means of four fixing brackets ensuring IP65.

11.1 - Unit dimensions and panel cutout

The unit is designed for mounting in the panel front.

In order to ensure optimum mounting, the panel door must be cut out according to the following measurements:

H × W = 92.00 × 112.00 + 1.00 mm

H × W = 3.62» × 4.41» + 0.04»

The useful sizes are given below.

11.1.1 - Front view

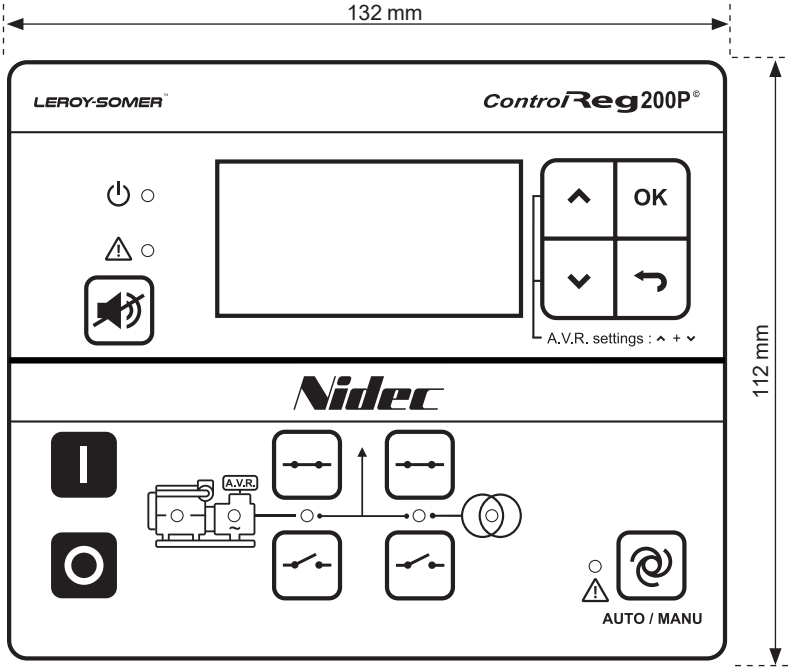

ControlReg200/ControlReg200P

11.1.2 - Top view

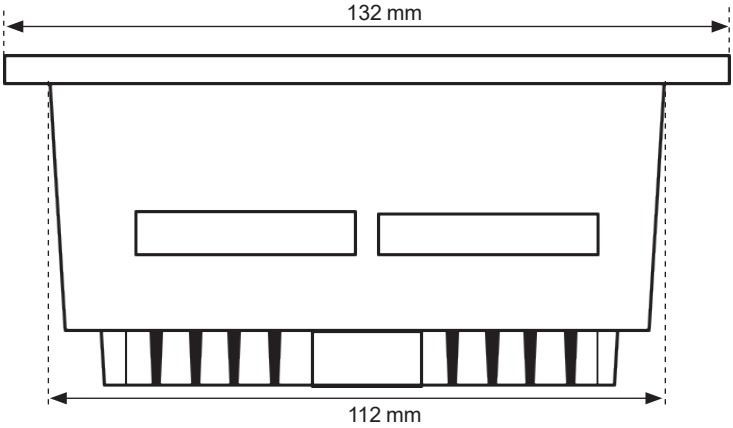

11.1.3 - Right side view

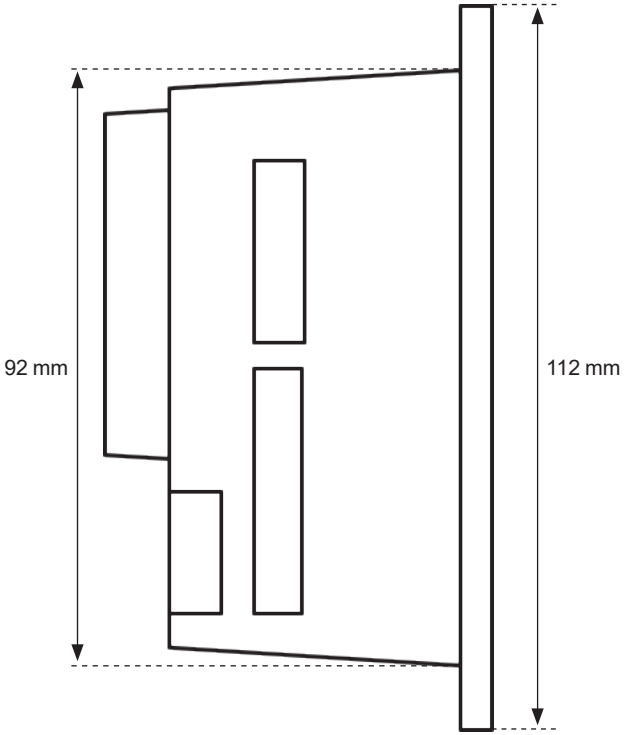

11.2 - Caution on brackets mounting

Two different brackets are given in the accessories pocket included in the package:

• 2 « BOT/TOP » mounting brackets identified by B and T letters

• 2 « LEFT/RIGHT » mounting brackets identified by L and R letters

Note: make sure that the each bracket is placed with respect of the labelling. Non respect of these recommendations may lead to damage the brackets.

Below is the way the 4 screws (M4x16 type) are fitted to the bracket.

11.3 - Tightening torques

Unit panel door mounting: 0.3 Nm, 2.7 lb-in

Plug connections (terminals): 0.5 Nm, 4.4 lb-in

Disposal and recycling instructions

We are committed to limiting the environmental impact of our activity. We continuously monitor our production processes, material sourcing and product design to improve recyclability and minimise our environmental footprint.
These instructions are for information purposes only. It is the user's responsibility to comply with local legislation regarding product disposal and recycling.

Waste & hazardous materials

The following components and materials require special treatment and must be separated from the alternator before the recycling process:
- electronic materials found in the terminal box, including the automatic voltage regulator (198), current transformers (176), interference suppression module and other semi-conductors.
- diode bridge (343) and surge suppressor (347), found on the alternator rotor.
- major plastic components, such as the terminal box structure on some products. These components are usually marked with information concerning the type of plastic.

All materials listed above need special treatment to separate waste from reclaimable materials and should be entrusted to specialist recycling companies.

Service & Support

Our worldwide service network of over 80 facilities is at your service.

This local presence is our guarantee for fast and efficient repair, support and maintenance services.

Trust your alternator maintenance and support to electric power generation experts. Our field personnel are 100% qualified and fully trained to operate in all environments and on all machine types.

We have a deep understanding of alternator operation, providing the best value service to optimise your cost of ownership.

Where we can help:

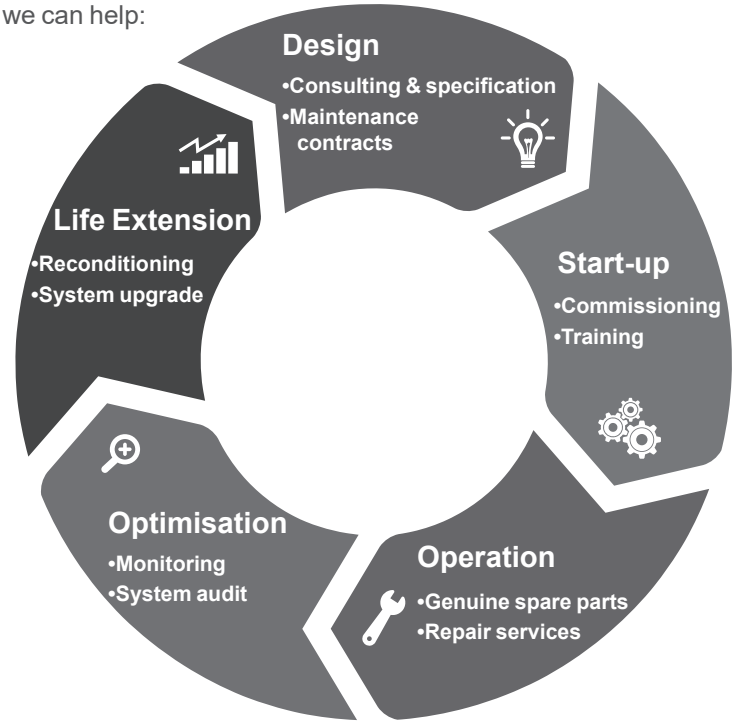

Contact us:
Americas: +1 (507) 625 4011
EMEA: +33 238 609 908
Asia Pacific: +65 6250 8488
China: +86 591 8837 3010
India: +91 806 726 4867

service.epg@leroy-somer.com

Scan the code or go to:

www.lrsm.co/support

LEROY-SOMER™

www.leroy-somer.com/epg

Connect with us at:

Nidec

All for dreams

5304 en - 2024.02 / f