Nidec
All for dreams

User and Technical Guide

Commander ID300/302

Integrated drive for IMfinity® motors

Référence : 5512 en - 2018.01 / a

LEROY-SOMER™

NOTE

LEROY-SOMER reserves the right to modify the characteristics of its products at any time in order to incorporate the latest technological developments. The information contained in this document may therefore be changed without notice.

⚠ WARNING

If accidentally starting the installation is likely to cause a risk to personnel or the machines being driven, it is essential to supply the equipment via a circuit-breaking device (power contactor) which can be controlled via an external safety system (emergency stop, detection of errors on the installation).

The Commander ID300/302 is fitted with safety devices which, in the event of a problem, control stopping and thus stop the motor. The motor itself can become jammed for mechanical reasons. Voltage fluctuations, and in particular power cuts, may also cause the motor to stop. The removal of the causes of the shutdown can lead to restarting, which may be dangerous for certain machines or installations.
In such cases, it is essential that the user takes appropriate precautions against the motor restarting after an unscheduled stop.

The variable speed drive is designed to be able to supply the motor and the driven machine above its rated speed.
If the motor or the machine are not mechanically designed to withstand such speeds, the user may be exposed to serious danger resulting from their mechanical deterioration. Before programming a high speed, it is important that the user checks that the installation can withstand it.

The Commander ID300/302 which is the subject of this manual is designed to be integrated in an installation or an electrical machine, and can under no circumstances be considered to be a safety device. With the sole exception of the Safe Torque Off (Commander ID302 only), none of the drive functions must be used to ensure safety of personnel, i.e. they must not be used for safety-related functions. It is therefore the responsibility of the machine manufacturer, the designer of the installation or the user to take all necessary precautions to ensure that the system complies with current standards, and to provide any devices required to ensure the safety of equipment and personnel.

LEROY-SOMER declines all responsibility in the event of the above recommendations not being observed.

.....

This manual describes the setting (including user preset configurations and advanced menus), technical data and diagnostics of the Commander ID300/302.

For more information about the Commander ID300/302, please use the web address www.commanderID300.info.

Manual corresponding to drive firmware versions higher than or equal to V03.00.00.08.

SAFETY AND OPERATING INSTRUCTIONS FOR VARIABLE SPEED DRIVES
(In accordance with the low voltage directive 2014/35/EU)

•Throughout the manual, this symbol warns of consequences which may arise from inappropriate use of the Commander ID300/302 (motor or drive), since electrical risks may lead to material or physical damage as well as constituting a fire hazard.

1 - General
The Commander ID300/302 may contain moving parts, as well as hot surfaces, during operation.
Unjustified removal of protection devices, incorrect use, faulty installation or inappropriate operation could represent a serious risk to personnel and equipment.
For further information, consult the manual.
All work relating to transportation, installation, commissioning and maintenance must be performed by experienced, qualified personnel (see IEC 364, CENELEC HD 384 or DIN VDE 0100, as well as national specifications for installation and accident prevention).
In these basic safety instructions, qualified personnel means persons competent to install, mount, commission and operate the product and possessing the relevant qualifications.

2 - Use
Commander ID300/302 motors and drives are components designed for integration in installations or electrical machines. When integrated in a machine, commissioning must not take place until it has been verified that the machine conforms with directive 2006/42/EC (Machinery Directive). It is also necessary to comply with standard EN 60204, which stipulates in particular that electrical actuators (which include Commander ID300/302) cannot be considered as circuit-breaking devices and certainly not as isolating switches.
Commissioning can take place only if the requirements of the Electromagnetic Compatibility Directive (EMC 2014/30/EC) are met.
The Commander ID300/302 meet the requirements of the Low Voltage Directive 2014/35/EU. The harmonized standards of the DIN VDE 0160 series in connection with standard VDE 0660, part 500 and EN 60146/VDE 0558 are also applicable.
The technical characteristics and instructions concerning the connection conditions specified on the nameplate and in the documentation provided must be observed without fail.

3 - Transportation, storage
All instructions concerning transportation, storage and correct handling must be observed.
The climatic conditions specified in the technical manual must be observed.

4 - Installation
The installation and cooling of equipment must comply with the specifications in the manual supplied with the product.
Commander ID300/302 must be protected against any excessive stress. In particular, there must be no damage to parts and/or modification of the clearance between components during transportation and handling. Avoid touching the electronic components and contact parts.
The Commander ID300/302 contain parts which are sensitive to electrostatic stresses and may be easily damaged if handled incorrectly. Electrical components must not be exposed to mechanical damage or destruction (risks to health!).

5 - Electrical connection
When work is performed on Commander ID300/302 which are powered up, the national accident prevention regulations must be respected.
The electrical installation must comply with the relevant specifications (for example conductor cross-sections, protection via fused circuit-breaker, connection of protective conductor). More detailed information is given in the manual.
Instructions for an installation which meets the requirements for electromagnetic compatibility, such as screening, earthing, presence of filters and correct insertion of cables and conductors, are given in the documentation supplied with the Commander ID300/302. These instructions must be followed in all cases, even if the Commander ID300/302 carries the CE mark.
Adherence to the limits given in the EMC legislation is the responsibility of the manufacturer of the installation or the machine.

6 - Operation
Installations incorporating Commander ID300/302 must be fitted with additional protection and monitoring devices as laid down in the current relevant safety regulations, such as the law on technical equipment, accident prevention regulations, etc. Modifications to the Commander ID300/302 using control software are permitted.
Active parts of the device and the live power connections must not be touched immediately after the Commander ID300/302 is powered down, as the capacitors may still be charged. In view of this, the warnings fixed to the variable speed drives must be observed.

7 - Servicing and maintenance
Refer to the manufacturer's documentation.

This manual is to be given to the end user.

CONTENT

CONTENT

1 - INTRODUCTION

This guide describes the parameter structure of the Commander ID300/302 and the various means to set the drive.
The user Menu (Menu 0) and its preset configurations gives an easy way to commission the drive for most common applications.
In the case of more specific applications that need dedicated motor control or functions, the user can refer to the advanced menu tables in *section 6.2, page 93,* to the parameter reference guide (html) for detailed explanation of the parameters or to Connect software (www.commanderID300.info).
This guide also provides technical data about the drive like ratings, EMC compliance or onboard PLC, and a diagnostic chapter that gives detailed information about drive alarms and trips, helping the user with useful recommended actions.

2 - DRIVE SETTING

This chapter introduces the user interfaces which can be used with Commander ID300/302.
The drive can be set via the following interfaces:

- **ID-SIZE1-Keypad** for size 1 and 2 drives
  ID-SIZE3-Keypad for size 3 drive
  Keypad integrated to the cover, with LCD display.
- **Field Keypad RTC:** Remote keypad with LCD display and Real Time Clock function (lead included; SELV classified).
- **Connect** software: Windows-based software to commission and monitor the drive.

• The drives use an algorithm which is adjusted by parameters. The performance levels obtained depend on the parameter setting. Inappropriate settings may have serious consequences for personnel and machinery.
• The drive parameters must only be set by appropriately qualified and experienced personnel.
• Before powering up the drive, check that the power connections are correct, and that any moving parts are mechanically protected.
• Before setting the drive parameters, all instructions relating to installation and connection contained in the installation document supplied with the Commander ID300/302 ref.5511 must have been strictly observed (www.commanderID300.info).
• Users of the drive should take particular care to avoid starting it accidentally.

2.1 - Keypads

2.1.1 - ID-SIZE1- Keypad and ID-SIZE3-Keypad

Located on motor terminal cover and provided as an option (see the relevant installation sheet for installation information), the keypad display consists of up to four rows of text. The upper two rows show the drive status or the menu and parameter number currently being viewed. When in status mode, an area one character wide and four lines high on the right-hand side of the display, is reserved for displaying actions that are active on the drive (see *section 2.1.8, page 8*).
The keypad powers up into the status state. The value of any two parameters can be permanently displayed on the bottom two rows of the screen in the status state. To do this, enter the desired parameter numbers into Pr **00.063 / 11.018** (Status Mode Parameter 1) and Pr **00.062 / 11.019** (Status Mode Parameter 2).

NOTE
• This keypad works at 115200 baud rate which is the default communication parameter value of the drive (Pr **00.043/11.025**). Do not modify this parameter otherwise you will loss the communication between the keypad and the drive.
• This keypad is also available as an IP66 remote option called "Remote Keypad", designed to be fitted on a cabinet door if necessary.

1. Escape button
2. Start button (green)
3. Navigation keys (x4)
4. Stop/Reset button (red)
5. Status LED*
6. Enter button

(*) Status LED in trip state: flashing, 0.5s duty cycle.

2.1.2 - Field Keypad RTC

This keypad is provided as an option (see relevant sheet for installation details). The Keypad display consists of two rows of text. The upper row shows the drive status or the menu and parameter number currently being viewed. The lower row of the display line shows the parameter value or the specific trip type. The last two characters on the first row may display special indications. Refer to *section 2.1.8, page 8* for their meaning.
When the drive is powered up, the lower row will show the power up parameter defined by Parameter Displayed At Power-Up (Pr **11.022**).

NOTE
• Whatever the communication baud rate is set in the drive, the Field Keypad RTC will automatically detect it to communicate with the drive.
• This keypad is also available as an option called "Remote Keypad RTC", designed to be fitted on a cabinet door if necessary.

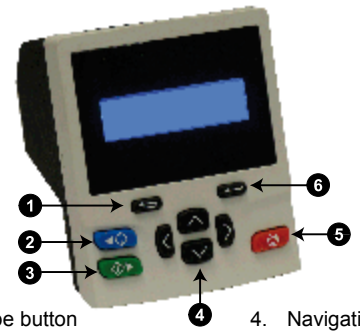

1. Escape button
2. Start reverse (Auxiliary button)
3. Start forward
4. Navigation keys (x4)
5. Stop / Reset (red) button
6. Enter button

2.1.3 - How to read or edit parameters

To write or read drive parameters from an ID-SIZE1-Keypad or a Field Keypad RTC, please refer to the diagram below.

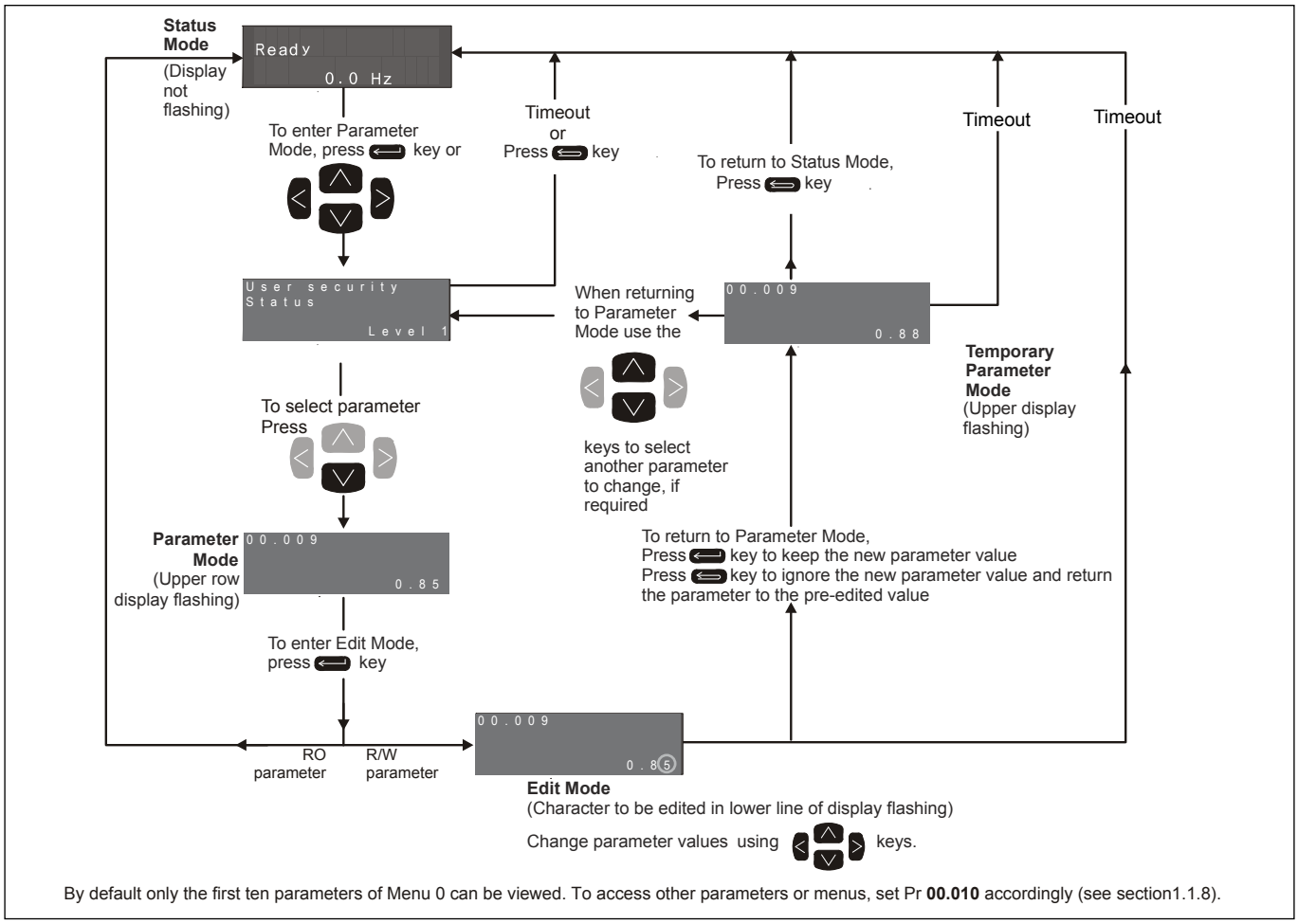

By default only the first ten parameters of Menu 0 can be viewed. To access other parameters or menus, set Pr **00.010** accordingly (see section1.1.8).

2.1.4 - Navigation

The drive parameter structure consists of menus (0 to 22) and parameters.
The drive initially powers up so that only the first ten parameters of Menu 0 can be viewed. The left and right navigation buttons can only be used to move between menus if Pr **00.010** has been set to show 'All Menus'. Refer to *section 2.1.9, page 8* for more information.

Do not change parameter values without careful consideration. Incorrect values may cause damage or a safety hazard.

The menus and parameters roll over in both directions.
i.e. if the last parameter is displayed, a further press will cause the display to rollover and show the first parameter.
When changing between menus the drive remembers which parameter was last viewed in a particular menu and thus displays that parameter.

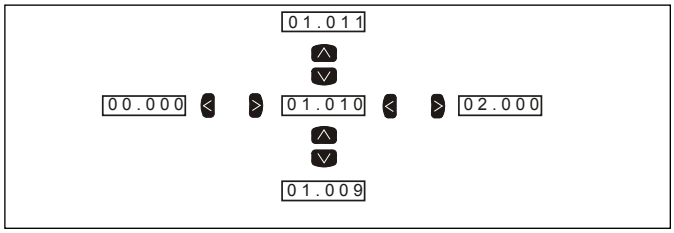

2.1.5 - Saving parameters

When changing a parameter in Menu 0, the new value is saved when pressing the Enter button to return to parameter view mode from parameter edit mode.
If parameters have been changed in the advanced menus, then the change will not be saved automatically. A save function must be carried out.

Procedure

1. Select 'Save parameters' in Pr mm.000*
2. Either press the red reset button or toggle the reset digital input (by default, terminal 8, DI2).

* Where mm can be any menu number.

2.1.6 - Restoring parameter defaults

Restoring parameter defaults by this method saves the default values in the drive memory.

Procedure

1. Ensure the drive is not enabled, i.e. drive is in Inhibit state (drive enable terminal(s) is(are) open).
2. Select 'Reset 50 Hz Defs' in Pr **mm.000**.
3. Press the red reset button

* Where mm can be any menu number.

NOTE

Motor parameters Pr **00.006** to Pr **00.009** and their relevant advanced parameters (Pr **05.007** to Pr **05.010**) are not affected by this procedure.

Some parameters of Commander ID300/302 are set at factory to take in account the specificities of the motor, the drive and the options already fitted at factory. This avoids any extra settings for the customer. But if drive default parameter values are restored during commissioning, the factory preset parameters will be lost and set back to their default value (except the ones of the motor rating). If nevertheless it is necessary to restore parameter default values, it is hardly recommended to set the parameters as the same as already done at factory, see the relevant settings in the table below. This will ensure a correct operation of the brake and a correct protection of the braking resistor.

Mounted or fitted at factory	Factory set parameters		
	Function	**Pr**	**Value**
• Gear-motor	Maximum speed	**00.002 (01.006)**	80 Hz
• ID-SIZE1-DBR200 **• ID-SIZE3-DBR400** (Optional braking resistor)	Braking resistor rated power	**10.030**	DBR200: 0.1 kW DBR400: 0.2 kW
	Braking resistor thermal time constant	**10.031**	600.00 s
	Braking resistor resistance	**10.061**	DBR200: 200.00 Ω DBR400: 100.00 Ω
• Thermistor w/o brake, STANDARD AV/AI config. by default	ADI2 thermistor mode	**00.014 (07.045)**	Thermistor(2)
FFB brake and **ID-SIZEx-Brake Contactor** w/o motor thermistor	Drive configuration	**00.005 (11.034)**	AV with brake (12)*
	ADI2 thermistor mode	**00.014 (07.045)**	Therm No Trip(3)
FFB brake and optional **ID-SIZEx-Brake Contactor** with **motor thermistor**	Drive configuration	**00.005 (11.034)**	AV with brake (12)*

* 3PS/1Ana brake configuration can be set by the user, depending of the requirements of the application and if a motor thermistor is fitted or not. For more details about preset configurations, please refer to *section 5.6, page 30.*

2.1.7 - Quick access mode and Keypad shortcuts

Quick access mode

The quick access mode allows direct access to any parameter without scrolling through menus and parameters. To enter the quick access mode, press and hold the Enter button on the keypad while in 'parameter view mode'.

Keypad shortcuts

• In 'parameter view mode':

If the up and down keypad buttons are pressed together, then the keypad display will jump to the start of the parameter menu being viewed, e.g. Pr **05.005** being viewed, when the above buttons pressed together will jump to Pr **05.000**.

If the left and right keypad buttons are pressed together, then the keypad display will jump to the last viewed parameter in Menu 0.

• In 'parameter edit mode':

If the up and down keypad buttons are pressed together, then the parameter value of the parameter being edited will be set to 0.

If the left and right keypad buttons are pressed together, the least significant digit (furthest right) will be selected on the keypad display for editing.

2.1.8 - Active action icon

Icon	Description
	Alarm active
	Real-time clock battery low (Field keypad RTC only)
or	Drive security active and locked or unlocked
	Motor map 2 active
	Onboard User program running
	Keypad reference active
	Read Only parameter

2.1.9 - Parameter access level

The parameter access level determines whether the user has access to Menu 0 only or to all the advanced menus (Menus 1 to 22) in addition to Menu 0.

User security Pr 00.010 (Pr 11.044)	Description
Level 1 (0)	Access to first 10 parameters in Menu 0 only
Level 2 (1)	All parameters in Menu 0 are visible and available for editing.
All Menus (2)	Parameters in all menus are visible and available for editing.

User security Pr 00.010 (Pr 11.044)	Description
Status Only (3)	The keypad remains in status mode, no parameters can be viewed or edited.
No Access (4)	The keypad remains in status mode, no parameters can be viewed or edited. Drive parameters cannot be accessed via a comms/fieldbus interface in the drive or any fieldbus module.

The security level is determined by the setting of Pr **00.010** or Pr **11.044**. It can be changed through the keypad even if the User Security Code has been set (see *section 2.1.10, page 9* for more details).

2.1.10 - User security code

In addition to the access levels selected by Pr **00.010/11.044**, a security code can be used to provide further restriction. When a security code has been set up, the drive can either be in the locked or unlocked state. In the locked state, the access level that has been set up applies and the security code will need to be entered to change the access level or edit any parameters in the current access level. In the unlocked state, the access level can be changed and parameters edited, but when the drive is powered down and powered up again the drive will be in the locked state. The drive may be relocked without powering down by selecting the required security level in Parameter 10 and pressing Enter.

Setting User security code
The User Security Code Pr **00.061/11.030** should be set to the desired security unlock code (not zero).
Select the required access level in Pr **00.010/11.044** and press the Enter key.
The desired access level is automatically saved and retained after power down, the keypad state changes to status mode and security is locked if it has been setup. The access level that is saved is shown in Security Status Pr **11.085** and Menu Access Status in Pr **11.086** .

When security is set up and locked:
Parameter access is restricted. User Security Code Pr **00.061/11.030** reads as zero. Therefore it is not possible to read the value of the security code when security is active and locked.

Security can be unlocked as follows:
Any attempt to change access level using Pr **00.010/11.044** or edit any read/write parameter causes "Security code" to be displayed on the first row of the display. When the Up or Down keys are pressed the second row shows the code being adjusted. On setting the code, the user presses the Enter key. If the correct code has been entered then the drive switches to Parameter edit mode on the parameter the user selected to edit, but if the correct code has not been entered, the notification "Incorrect security code" is displayed for 2s and the drive returns to Parameter view mode.
If Status only or No access has been set and locked then any attempt to leave status mode causes the security code to be requested as per the process described above. The security code entered must be correct for the keypad state machine to switch to the Parameter view mode. It is then possible to access all parameters normally.

Security can be cleared as follows:
The User Security Code Pr **00.061/11.030** should be set to zero. For security to remain cleared after power down then a parameter save should be performed or Pr **00.010/11.044** should be set to the required access level as with setting security.

2.1.11 - Displaying parameters with non default values only

By selecting 'Show non-default' in Pr **mm.000*** (alternatively, enter 12000 in Pr **mm.000**), the only parameters that will be visible to the user will be those containing a non-default value. This function does not require a drive reset to become active. In order to deactivate this function, return to Pr **mm.000** and select 'No action' (alternatively enter a value of 0).
Please note that this function can be affected by the access level enabled.

* Where mm can be any menu number.

2.1.12 - Displaying destination parameters only

By selecting 'Destinations' in Pr **mm.000*** (alternatively enter 12001 in Pr **mm.000**), the only parameters that will be visible to the user will be destination parameters. This function does not require a drive reset to become active. In order to deactivate this function, return to Pr **mm.000** and select 'No action' (alternatively enter a value of 0).
Please note that this function can be affected by the access level enabled.

* Where mm can be any menu number.

2.1.13 - Keypad status indications

Upper row string	Description	Drive output stage
Inhibit	The drive is inhibited and cannot be run.	Disabled
Ready	The drive is ready to run. The drive enable is active.	Disabled
Stop	The drive is stopped / holding zero frequency.	Enabled
Run	The drive is active and running.	Enabled
Supply Loss	Supply loss condition has been detected.	Enabled
Deceleration	The motor is being decelerated to zero frequency because the final drive run has been deactivated.	Enabled
Dc Injection	The drive is applying dc injection braking.	Enabled
Trip	The drive has tripped and no longer controlling the motor. The trip code appears in the lower display.	Disabled
Under Voltage	The drive is in the under voltage state.	Disabled
Heat	The motor pre-heat function is active.	Enabled

When the drive is in 'trip' condition, the upper row of the display will indicate that the drive has tripped and the lower row of the display will show the trip code. For further information regarding trip codes, refer to *section 8.3, page 136*.

During an 'alarm' condition, the upper row of the display alternates between the drive status (Inhibit, Ready or Run, depending on what is displayed) and the alarm. For further information regarding alarms, refer to *section 8.5, page 153*.

2.1.14 - Keypad set-up menu

To enter the keypad set-up menu press and hold the escape button on the keypad from status mode. All the keypad parameters are saved to the keypad non-volatile memory when exiting from the keypad set-up menu.
To exit from the keypad set-up menu press the escape or or button. Below are the keypad set-up parameters.
It is not possible to access the keypad parameters via any communications channel.

Keypad.00	Language			
Read-Write	↕	English, French, German, Italian, Spanish	→	English

Keypad.01	Show units			
Read-Write	↕	Off (0) or On (1)	→	

Keypad.02	Backlight Level			
Read-Write	↕	0 to 100%	→	

Keypad.03	Keypad Date(1)			
Read-Only	↕	01.01.10 to 31.12.99	→	-

Keypad.04	Keypad Time(1)			
Read-Only	↕	00:00:00 to 23:59:59	→	-

Keypad.05	Show Raw Text Parameter Values			
Read-Write	↕	Off or On	→	

Keypad.06	Software version			
Read-Only	↕	00.00.00.00 to 99.99.99.99	→	-

Keypad.08	Language version(2)			
Read-Only	↕	00.00.00.00 to 99.99.99.99	→	-

Keypad.08	Font version(2)			
Read-Only	↕	0 to 99	→	-

(1) Specific to the Field Keypad RTC
(2) Specific to the ID-Sizex-Keypad

2.2 - Connect software

Connect is a Windows™ based software commissioning / start-up tool. It can manage several drive ranges, including Commander ID300/302. To create your Commander ID300 or 302 project, use Unidrive M Connect which is a common software.
CTScope software is also included.

Connect software can be used for commissioning/start-up and monitoring, firmware or user programs downloads, drive parameters can be edited, uploaded/ downloaded/compared and simple or custom menu listings can be created. Drive menus can be displayed in standard list format or as live block diagrams. It is able to communicate with a single drive or a network.

CTScope is a PC Tool designed to trend/ trace the values of parameters on drives and option modules.

Connect software system requirements
• Windows 8, Windows 7 SP1, Windows Vista SP2, Windows XP SP3
• Minimum of 1280 x 1024 screen resolution with 256 colours
• Microsoft.Net Frameworks 4.0 (this is provided in the downloaded file)
• Note that you must have administrator rights to install Connect software.
• The Commander ID300 operates at 115200 bauds as standard, however at this speed it is necessary to correctly set the PC to allow the communication with "Connect" software. For the PC to be able to communicate with the drive, the latency time of the PC have to be changed and set to 1ms (instead of 16ms). To help the user, a procedure is available on www.commanderID300.info.
CAUTION
This new setting can affect other Comms software, it is then advisable to inform your IT department before making any change.

To get the file of the Connect software (free of charge), please log on www.commanderID300.info.

NOTE
• Any previous version of Connect software should be un-installed before proceeding with the new installation (existing projects will not be lost).
• Before selecting a preset configuration by setting Pr **00.005**, ensure the drive is disabled (open terminal 8 or 31/34) and Connect software is "On line" with the drive (for the auto-configuration to take place correctly).
• An USB/RS485 lead has been designed to connect the drive to laptop computers, and is available from the supplier of the drive (ref. 4500-0096).
• Included within Connect are the Parameter Reference Guides.
• If drive baud rate value is changed from its default value (Pr **00.043(11.025)** at 115200 bauds), Connect software will work correctly but slower. However, if ID-SIZEx-Keypad option is used at the same time, it will no longer be able to communicate with the drive.

3 - CONNECTION SPECIFICITIES

3.1 - Power

• For all details about power connections, safety warnings and installation of the Commander ID300/302, please refer to the Installation and Quick Start Commissioning guide ref.5511 (www.commanderID300.info).

3.2 - Commander ID302

The Commander ID302 has got two Safe Torque Off inputs (not the Commander ID300).
The drive enable is performed using terminal 8 (DI2) on Commander ID300 and terminals 31 and 34 on Commander ID302.

In this guide, the specific connection of STO inputs of the Commander ID302 will not be detailed in control connection diagrams of each preset configuration (*section 5.6, page 30*). So, refer to the STO connection diagram below. It will be valid for all preset configurations.

NOTE
By default, the terminal 8 (DI2) is not assigned for the Commander ID302 (except for "3PS/1Ana brake" configuration).

• STO terminal connections

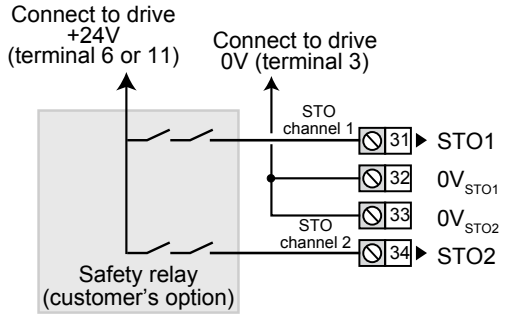

3.3 - Brake Control option (ID-SIZEx-Brake Contactor)

The Brake Control option (ID-SIZE1-Brake Contactor or ID-SIZE3-Brake Contactor depending of drive size) is designed to control the FFB brake of the motor.
All power connections are already made at factory. The only remaining connections are the ones of the power supply.
For more details on power connections with this option fitted, please refer to section 3.5 of the Installation and Quick commissioning guide ref.5511.

Brake function parameters of Commander ID300/302 are set at factory. This avoids any extra settings for the customer. But if drive default parameter values are restored during commissioning, the factory preset parameters will be lost and set back to their default value (except the ones of the motor rating). If nevertheless it is necessary to restore parameter default values, it is hardly recommended to set the parameters as the same as already done at factory, see the relevant settings in the table hereafter. This will ensure a correct operation of the brake.

mounted at factory	Factory set parameters		
	Function	**Pr**	**Value**
FFB brake and **ID-SIZEx-Brake Contactor** w/o thermistor	Drive configuration	**00.005 (11.034)**	AV with brake (12)*
	ADI2 thermistor mode	**00.014 (07.045)**	Therm No Trip(3)
FFB brake and **ID-SIZEx-Brake Contactor** with **thermistor**	Drive configuration	**00.005 (11.034)**	AV with brake (12)*

* 3PS/1Ana brake configuration can be set by the user, depending of the requirements of the application and if a motor thermistor is fitted or not. For more details about preset configurations, please refer to *section 5.6, page 30.*

3.4 - Motor thermistor

By default, the motor is protected by the drive by continuously measuring current in the IGBTs and with the thermal memory retention function.
However, an optional PTC probe can be added in motor windings in order to get an additional thermal protection.

When required by the customer, this optional thermistor is fitted, connected and set at factory.

3.4.1 - Connection

The PTC themistor will be connected to the control terminals 0V and ADI2 input at factory, as shown in the diagram below.

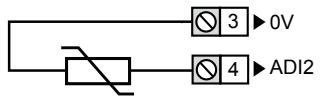

3.4.2 - Factory settings to manage motor PTC

For the drive to manage the PTC probe, the parameters listed in the table below are set at factory depending if it is a brake motor or not.

mounted / fitted at factory	Parameters set at factory		
	Function	**Pr**	**Value**
• Motor PTC (no brake)	Drive configuration	**00.005** (**11.034**)	STANDARD AV/AI (11) (default)
	ADI2 thermistor mode	**00.014** (**07.045**)	Thermistor(2) Details: Temperature measurement input without short circuit detection but with 'Thermistor' trip
• Motor PTC • FFB brake • ID-SIZEx-Brake Contactor	Drive configuration	**00.005** (**11.034**)	AV with brake(12)

NOTE
Without motor thermistor, STANDARD AV/AI (11) preset configuration is the default setting of the Commander ID300/302.

3.4.3 - Preset configurations with motor PTC management

If the preset configuration set at factory does not match with the application (see table above in *section 3.4.2, page 12)*, the user can select another preset configuration which allows the motor PTC management by default by setting Pr **00.005/11.034**: AV with brake(12), Keypad(16), Keypad Ref(17), Electronic Pot(18) and Local/Remote(21).

For more details about these preset configurations, please refer to *section 5.6, page 30.*

NOTE
If the user cannot find a suitable preset configuration for his application, it is advisable to use advanced parameters. Refer to Parameter Reference Guide (html) on www.comanderID300.info.

3.5 - Optional side flanges with LEDs (ID-xx-LED-FLANGE)

Each of the three optional side flanges include 3 LEDs that are used to show drive status (ID-RUN-POT-LED-FLANGE, ID-POT-LED-FLANGE, ID-LED-FLANGE).

By default, ADIO3 (control terminal 5) is set to be an analog output and is used to control the illumination of the LEDs (Pr **00.025*(07.057)** = 16) if the option is fitted. The yellow LED has no function by default, but it can be set by the user (Pr **00.027*(07.019*)**.

NOTE
ADIO3 output scaling Pr **00.024*(07.020)** must remain to the value 1.000 to keep LED functionalities as they are explained in this section.

• Green and red LED indications

LED colour and state	Commander ID300/302 condition
Steady green	No trip, mains present
Flashing green	The drive is active
Steady red	Drive in trip state. The trip can be one of those listed below: • Short-circuit of a motor winding • Locked motor rotor • Faulty insulation of a winding • I^2t overheating • Internal fault • Undervoltage • Overvoltage, etc.
Flashing red	Drive in alarm state. The alarm can be one of those listed below: • Braking resistor alarm • Motor overload alarm • Drive over-temperature alarm • Low AC alarm, etc.

If the drive trips on a fault or is in alarm state, a keypad option or "Connect" software is needed to view which trip/alarm mnemonic or code it is. To know more about alarms and trips, please refer to *section 8, page 135*.

• Yellow LED indication

The parameter 'ADIO3 yellow LED source' Pr **00.027/07.019*** defines the output (source) parameter that activates the yellow LED.
As an example, find below parameters that could be set in Pr **00.027*(07.019)** if required.

Parameter	Description
06.029	Hardware enable
10.003	Zero frequency
10.006	At frequency
10.009	Current limit active

(*) Menu 0 parameter numbers are not available for PUMP preset configuration are they are assigned to another functions.

ADIO3 output logic diagram

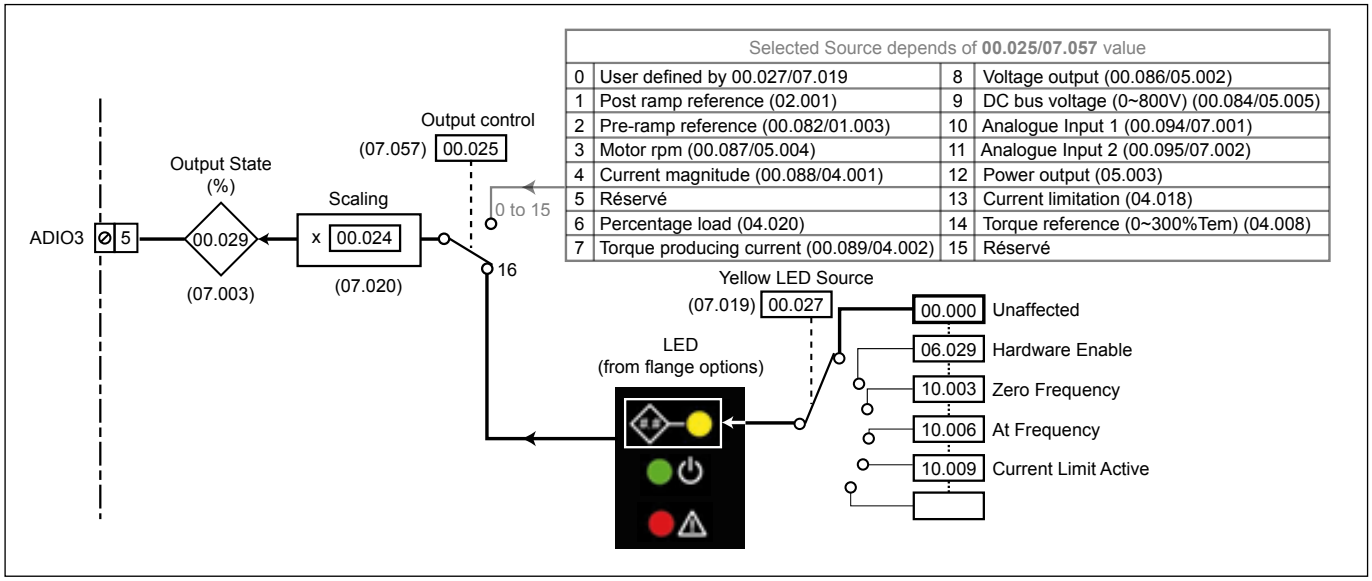

Selected Source depends of **00.025/07.057** value			
0	User defined by 00.027/07.019	8	Voltage output (00.086/05.002)
1	Post ramp reference (02.001)	9	DC bus voltage (0~800V) (00.084/05.005)
2	Pre-ramp reference (00.082/01.003)	10	Analogue Input 1 (00.094/07.001)
3	Motor rpm (00.087/05.004)	11	Analogue Input 2 (00.095/07.002)
4	Current magnitude (00.088/04.001)	12	Power output (05.003)
5	Réservé	13	Current limitation (04.018)
6	Percentage load (04.020)	14	Torque reference (0~300%Tem) (04.008)
7	Torque producing current (00.089/04.002)	15	Réservé

4 - DRIVE PARAMETER STRUCTURE

Parameter structure of the Commander ID300/302 is splitted into 23 menus (0 to 22). The Menu 0 is used to bring together various commonly used parameters for basic easy set up of the drive. All the parameters in Menu 0 appear in advanced menus (1 to 22) which can provide more precise settings.

4.1 - Menu structure

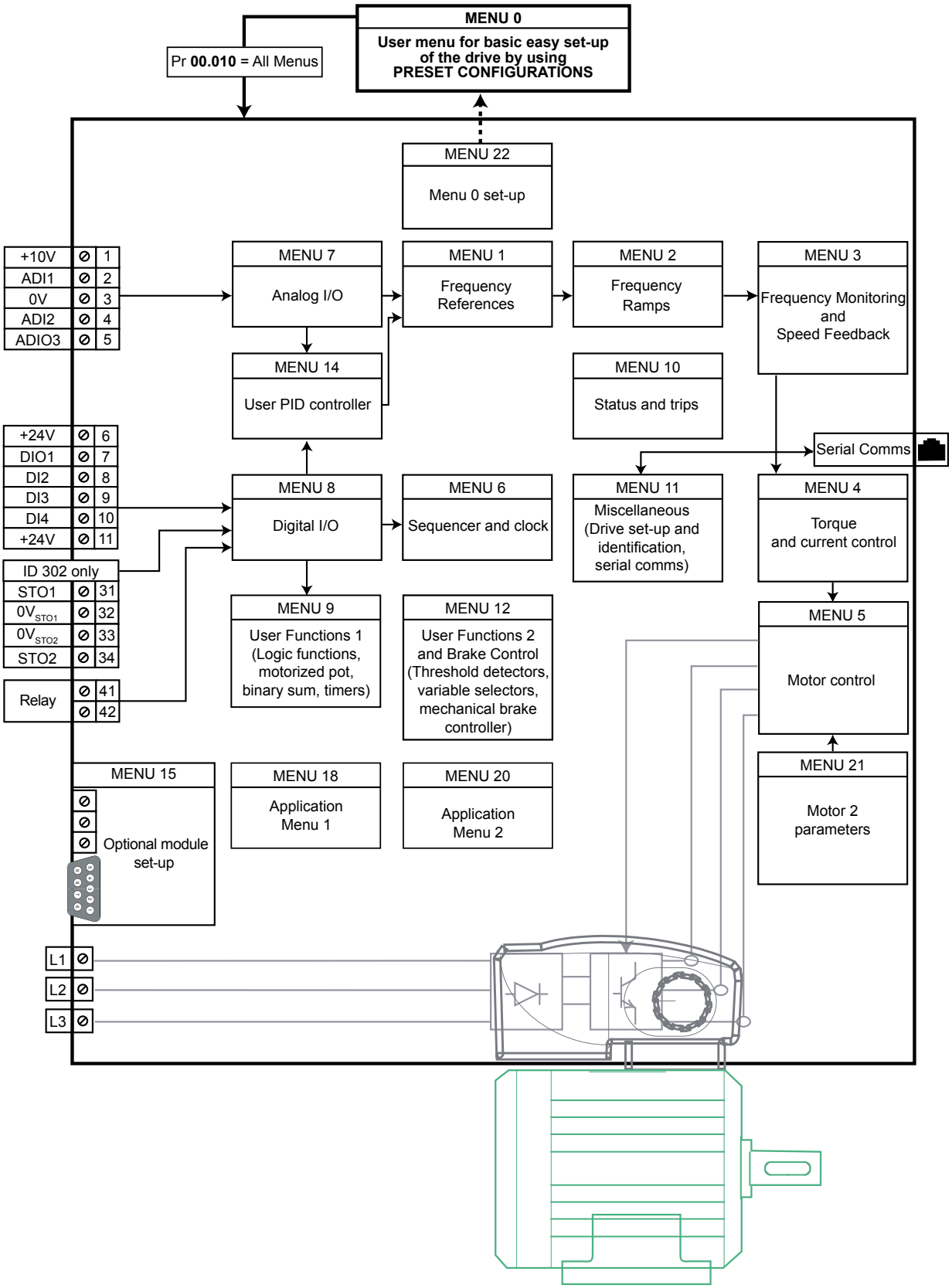

4.2 - Parameter access level diagram

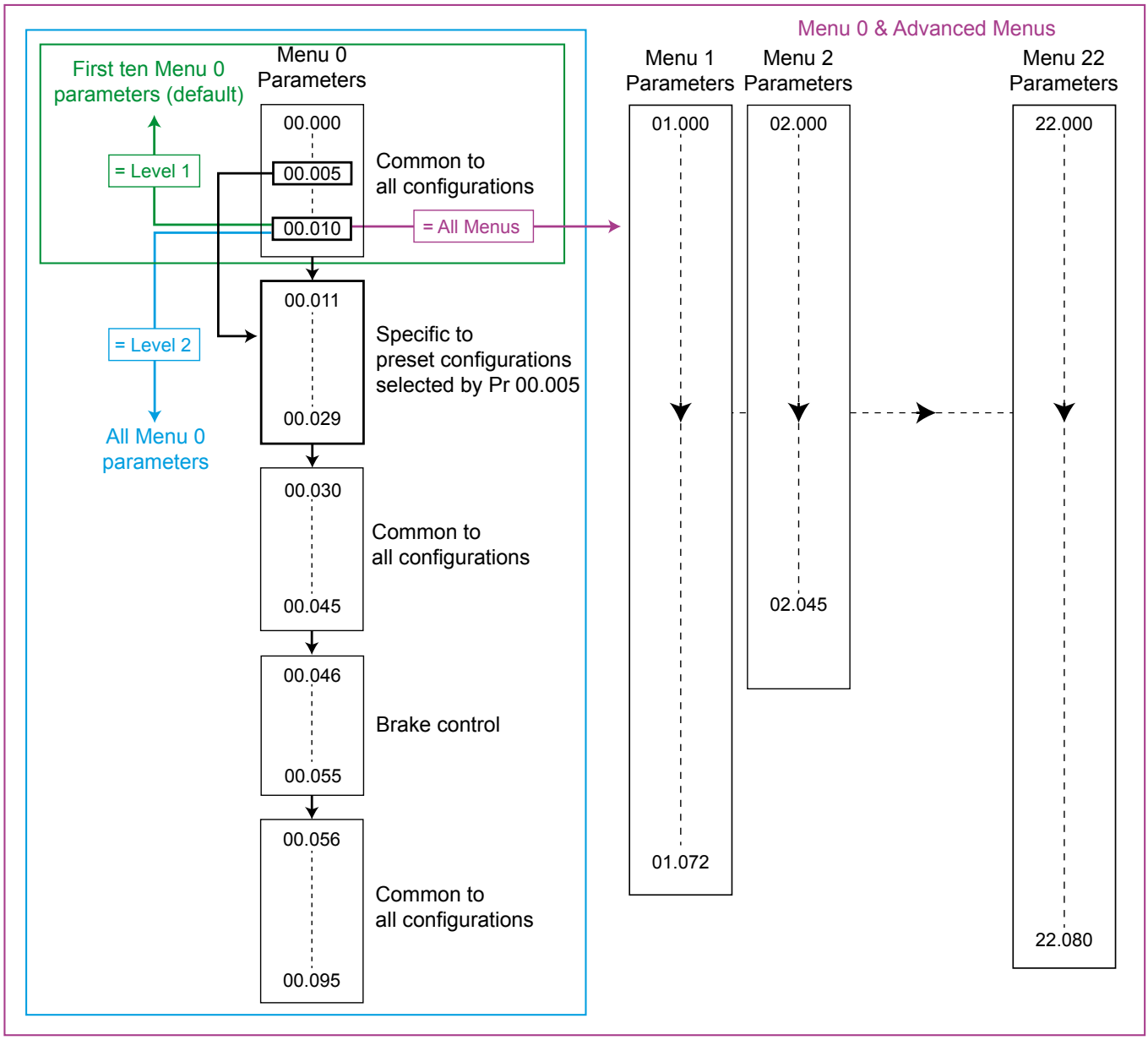

5 - MENU 0 AND PRESET CONFIGURATIONS

• The parameter values affect the motor protection and the safety of the system. Do not change parameter values without careful consideration. Incorrect values may cause damage or a safety hazard.
• Parameters dedicated to motor rating are already set by default at factory. The change from one configuration to another does not affect motor parameters already set.

5.1 - Menu 0 structure

Menu 0 allows an easy and quick setting of the drive for typical applications. All parameters of Menu 0 appear in other menus (advanced menus) which can provide more precise settings.
The Commander ID300/302 allows the user to select a preset configuration via Pr **00.005** resulting in automatic configuration of the control terminal blocks and menu 0 is then adapted with dedicated parameters from Pr **00.011** to Pr **00.029**. It is therefore advisable to select the correct configuration corresponding to the application and follow the associated commissioning procedure (detailed in *section 5.6, page 30*). If no preset configuration suits your application, refer to the advanced parameters in *section 6, page 89*.

CAUTION
Before selecting a preset configuration by Pr 00.005, the drive must be disabled (open terminal 8 or terminals 31 & 34). With Connect software, ensure you are "On line" for the parameters to be pre-configured accordingly in the software.

5.2 - Menu 0 parameter list

Parameter		Function	Range	Default value
Menu 0	**Adv. menu**			
Common parameters				
00.001	01.007	Minimum Speed	± VM_NEGATIVE_REF_CLAMP1 (HZ)	10.00 Hz
00.002	01.006	Maximum Speed	± VM_POSITIVE_REF_CLAMP (HZ)	• 50.00 Hz • 80 Hz for gear-motor(1)
00.003	02.011	Acceleration Rate	± VM_ACCEL_RATE (s/100Hz)	5.0 s/100 Hz
00.004	02.021	Deceleration Rate		10.0 s/100 Hz
00.005	11.034	Drive Configuration	STANDARD AV/AI (11), AV with brake (12), 3PS/1Ana brake (13), 3PS/1Ana Nobrake (14), 8 Preset (15), Keypad (16), Keypad Ref (17), Electronic Pot (18), Torque Control (19), Pid Control (20), Local/Remote (21), Pump (22)	STANDARD AV/AI (11)
00.006	05.007	Motor Rated Current	0.00 to VM_RATED_CURRENT (A)	Dependent of the motor. Factory-set
00.007	05.008	Motor Rated Speed	0.0 to 9000.0 rpm	
00.008	05.009	Motor Rated Voltage	0 to VM_AC_VOLTAGE_SET (V)	
00.009	05.010	Motor Rated Power Factor	0.00 to 1.00	
00.010	11.044	User Security Status	Level 1 (0), Level 2 (1), All Menus (2), Status Only (4), No Access (5)	Level 1

(1) 80 Hz value is set at factory for all gear-motor associations. If drive default parameter values are restored, Pr **00.002(01.006)** is set back to 50 Hz.

Shows parameters dependent on the motor rating and already set by default. No need to edit them.

Parameter		Function	Range	Default value
Menu 0	Adv. menu			
Preset configuration parameters				

00.011 to 00.029

Pr **00.011** to **00.029** functions are dependent of Pr **00.005** setting. For more details, refer to the dedicated section.

STANDARD AV/AI	AV with brake	3PS/1Ana brake	3PS/1Ana Nobrake
Voltage (ADI1) or current (ADI2) frequency reference selected by terminal See *section 5.6.1, page 30*	Voltage frequency reference (ADI1) and motor PTC with Brake option See *section 5.6.2, page 35*	Voltage frequency reference (ADI1) or 3 preset references selected by terminals with Brake option See *section 5.6.3, page 42*	Voltage frequency reference (ADI1) or 3 preset references selected by terminals (without Brake option) See *section 5.6.4, page 48*

8 Presets	Keypad	Keypad Ref	Electronic Pot
Eight preset references selected by terminals See *section 5.6.5, page 52*	Keypad reference and control See *section 5.6.6, page 56*	Keypad reference with terminal control See *section 5.6.7, page 60*	Electronic Potentiometer See *section 5.6.8, page 64*

Torque Control	PID Control	Local/Remote	Pump
Voltage frequency reference (ADI1) or Voltage torque reference (ADI2) selected by terminal See *section 5.6.9, page 69*	Voltage reference source (ADI1) and voltage feedback source (ADI2) See *section 5.6.10, page 73*	Voltage frequency reference (ADI1) with terminal control or Keypad reference with Keypad control selected by terminal See *section 5.6.11, page 77*	Pump application (Commander ID300 only) See *section 5.6.12, page 82*

Common parameters

00.030	02.004	Ramp Mode Select	Fast (0), Standard (1), Std boost (2), Fast boost (3)	Fast (0)
00.031	06.001	Stop Mode	Coast (0), Ramp (1), Ramp dc I (2), dc I (3), Timed dc I (4), Disable (5)	Ramp (1)
00.032	05.013	Dynamic V to F Select	0 or 1	1
00.033	06.009	Catch A Spinning Motor	Disable (0), Enable (1), Fwd Only (2), Rev Only (3)	Disable (0)
00.034	01.010	Bipolar Reference Enable	0 or 1	0
00.035	08.081	DI1 Control	0 to 26	0
00.036	-	Not used		
00.037	05.018	Maximum Switching Frequency	2 (2); 3 (3); 4 (4); 6 (5); 8 (6); 12 (7); 16 (8) kHz	3 (3) kHz
00.038	05.012	Autotune	0 to 2	0
00.039	05.006	Motor Rated Frequency	0.00 to 150.00 Hz	50.00 Hz
00.040	05.011	Number of Motor Poles	0 to 16	0
00.041	05.014	Control Mode	Ur S (0), Ur (1), Fixed (2), Ur Auto (3), Ur I (4), Square (5), Fixed Tapered (6)	Ur I (4)
00.042	05.015	Low Frequency Voltage Boost	0.0 to 25.0 %	3.0 %
00.043	11.025	Serial Baud Rate	600 (1), 1200 (2), 2400 (3), 4800 (4), 9600 (5), 19200 (6), 38400 (7), 57600 (8), 76800 (9), 115200 (10) bauds	115200 (10) bauds
00.044	11.023	Serial Address	1 to 247	1
00.045	11.020	Reset Serial communications	Off or On	Off

Shows parameters dependent on the motor rating and already set by default. No need to edit them.

Parameter		Function	Range	Default value
Menu 0	Adv. menu			
Brake control parameters				
00.046	12.042	Upper Current Threshold	0 to 200 %	50 %
00.047	12.043	Lower Current Threshold	0 to 200 %	10 %
00.048	12.044	Brake Release Frequency	0.00 to 20.00 Hz	1.00 Hz
00.049	12.045	Brake Apply Frequency	0.00 to 20.00 Hz	2.00 Hz
00.050	12.046	Brake Release Delay	0.0 to 25.0 s	0.1 s
00.051	12.047	Post-brake Release Delay	0.0 to 25.0 s	0.1 s
00.052	12.040	Brake Release	0 or 1	-
00.053	12.050	Initial Direction	Ref (0), Forward (1), Reverse (2)	Ref (0)
00.054	12.051	Brake Apply Through Zero Threshold	0.00 to 20.00 Hz	1.00 Hz
00.055	12.041	Brake Controller Enable	Disable (0), Relay (1), Digital IO (2), User (3)	Disable (0)
Common parameters				
00.056	10.020	Trip 0	0 to 255	-
00.057	10.021	Trip 1	0 to 255	-
00.058	10.022	Trip 2	0 to 255	-
00.059	11.047	Onboard User Program (OUP) Enable	Stop (0) or Run (1)	Run (1)
00.060	11.048	OUP Status	-2147483648 to 2147483647	-
00.061	11.030	User Security Code	0 to 9999	0
00.062	11.019	Status Mode Parameter 2	0.000 to 30.999	**4.020**
00.063	11.018	Status Mode Parameter 1	0.000 to 30.999	**2.001**
00.064	11.021	Customer defined scaling	0.000 to 10.000	1.000
00.065 to 00.068		Not used		
00.069	05.040	Spin Start Boost	0.0 to 10.0	1.0
00.070 to 00.075		Not used		
00.076	10.037	Action on Trip Detection	0 to 31	0
00.077	11.032	Maximum Current Rating	0.00 to 9999.99 A	-
00.078	11.029	Software Version	0 to 999999	-
00.079	-	Not used		
00.080	10.002	Drive active	0 or 1	-
00.081	01.001	Reference selected	± VM_SPEED_FREQ_REF (Hz)	-
00.082	01.003	Pre-ramp Reference		-
00.083	03.001	Final Demand Reference		-
00.084	05.005	D.C. Bus Voltage	± VM_DC_VOLTAGE (V)	-
00.085	05.001	Output Frequency	± VM_SPEED_FREQ_REF	-
00.086	05.002	Output Voltage	± VM_AC_VOLTAGE (V)	-
00.087	05.004	Motor Rpm	± 9000 rpm	-
00.088	04.001	Current Magnitude	± VM_DRIVE_CURRENT (A)	-
00.089	04.002	Torque Producing Current	± VM_DRIVE_CURRENT (A)	-
00.090	08.020	Digital I/O Read Word	0 to 1023	-
00.091	01.011	Reference On	Off or On	-
00.092	01.012	Reverse Select	Off or On	-
00.093	-	Not used		
00.094	07.001	Analog/Digital Input 1	± 100.00 %	-
00.095	07.002	Analog/Digital Input 2	± 100.00 %	-

5.3 - Explanations of symbols used for parameters

00.005 (11.034) A number in bold refers to a menu number and a parameter number within the menu. Its structure is MM.PPP where MM is the Menu number and PPP is the parameter number. For a Menu 0 parameter, the equivalent parameter from the advanced menu is shown in brakets.

00.005 : Parameters which appear in a rectangle are parameters with Read and Write access.

00.029 : Parameters which appear in a diamond are parameters with Read Only access and are write-protected.

↕ : Indicates the range of a parameter.

→ : Indicates the default value of a parameter. When it is a Read Only parameter, a "-" is present in the relevant location as there is no default value available.

5.4 - Menu 0 logic diagram

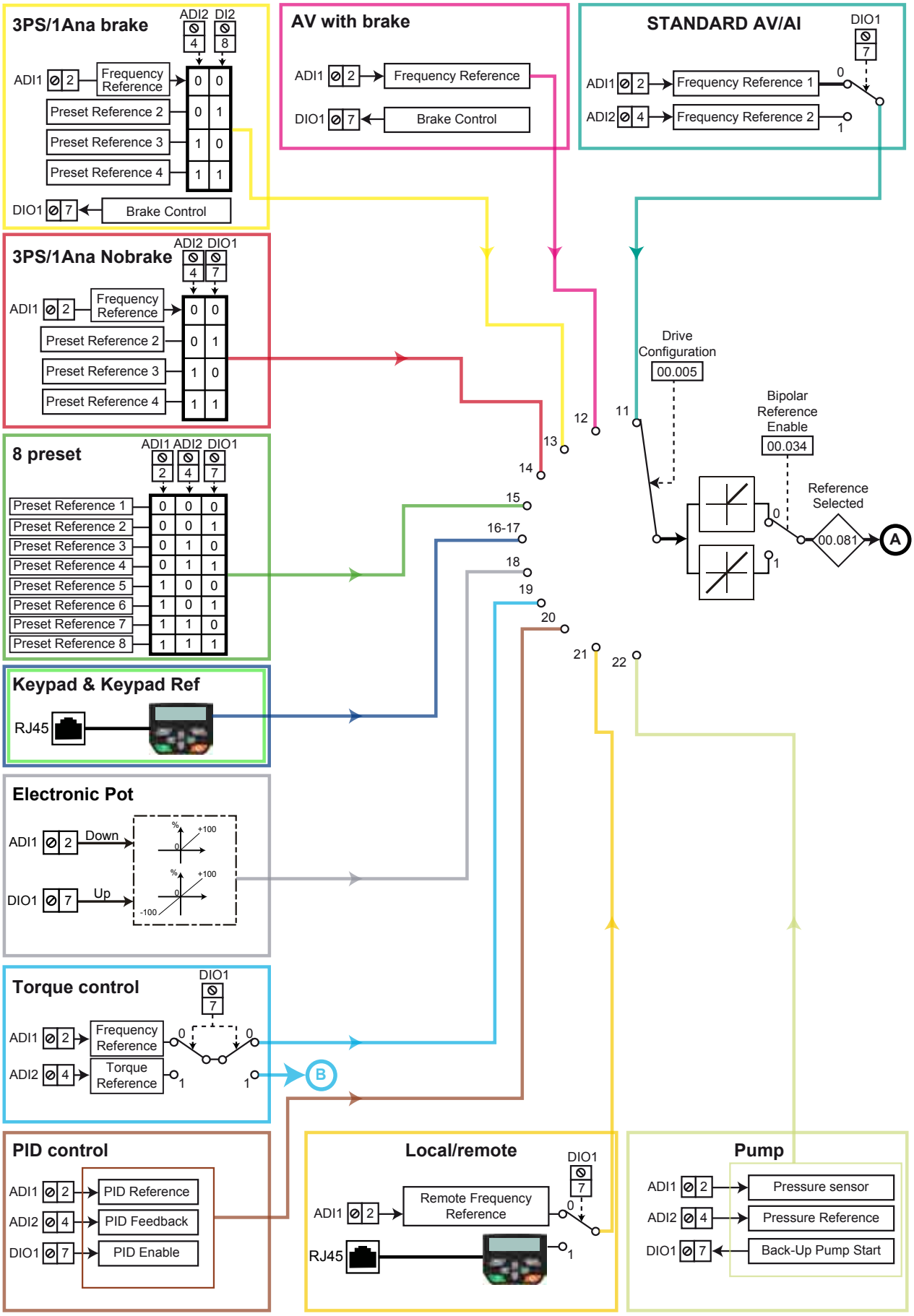

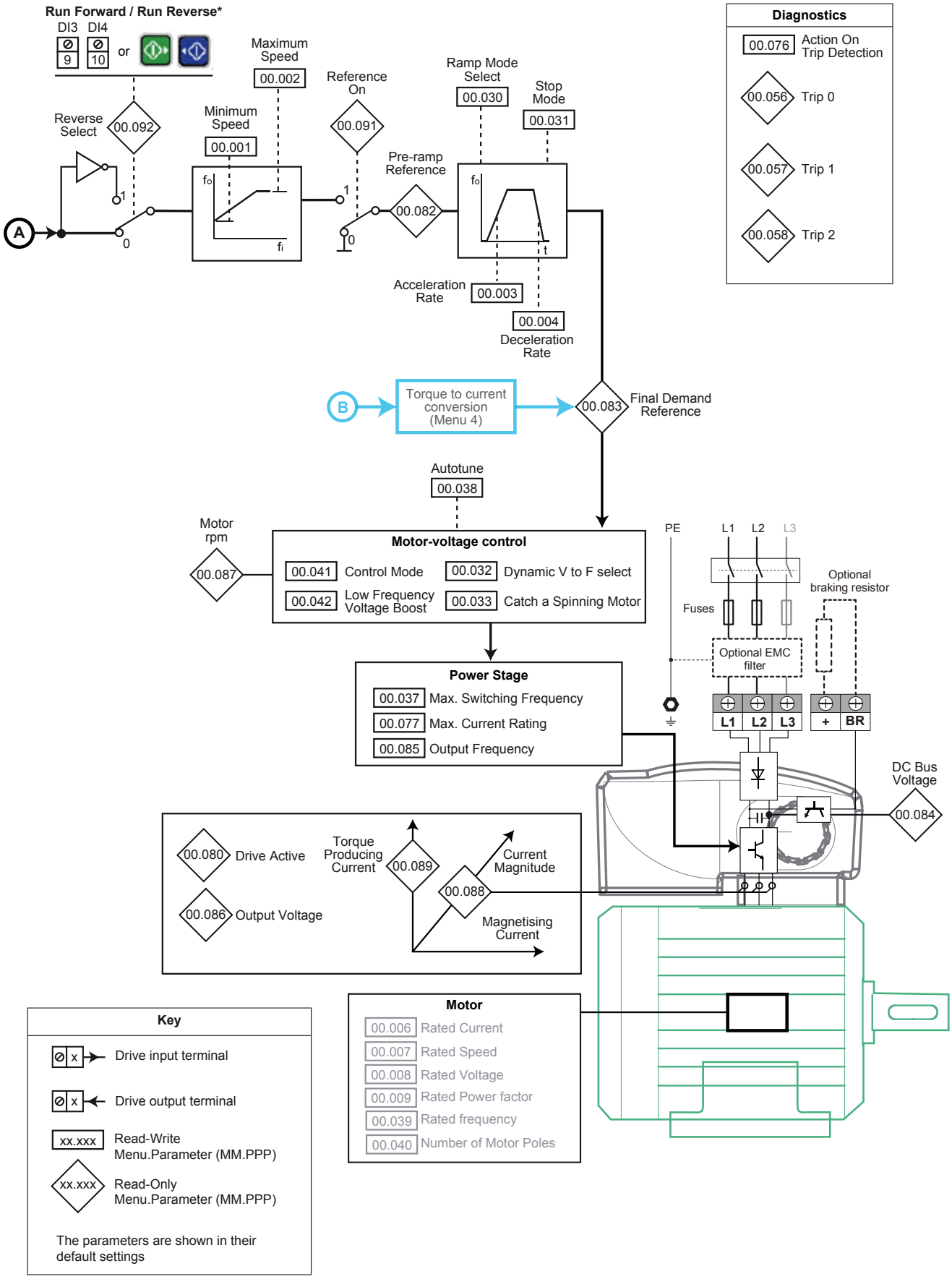

* DI4 Run Reverse is not available with Menu 0 of Pump Configuration.

5.5 - Menu 0 parameter explanations

NOTE

For more details about variable ranges of some parameters (e.g VM_POSITIVE_REF_CLAMP or VM_ACCEL_RATE), please refer to *section 6.1, page 89*.

00.000	Parameter 0 functions

Parameter zero allows the user to perform some specific actions by only entering a text string or a value in Pr **00.000**.

Commonly used functions of this parameter are provided as text strings and other functions are only provided as numeric values. They are also available from parameter zero of any advanced menu (Pr **mm.000** where mm is the menu number).

All functions require a drive reset to initiate the function except "Destinations" and "Reset modules".

Value	string	Action
0	No action	No action
1000	-	Save parameters when Under Voltage Active (Pr **10.016**) is not active.
1001	Save parameters	Save drive parameters to non-volatile memory
1070	Reset modules	Reset option module
1233	Reset 50Hz defs	Load 50Hz defaults
12000	Show non-default	Only display parameters that are different from their default value
12001	Destinations	Only display parameters that are used to set-up destinations
59999	-	Deletes onboard user program if a program is present NOTE It cannot be deleted if the drive is active or if the user program is running. To stop the program, set Pr **00.059** to Stop(0).

Some parameters of Commander ID300/302 are set at factory to take in account the specificities of the motor, the drive and the options already fitted at factory. This avoids any extra settings for the customer. But if drive default parameter values are restored (Pr 00.000 = 1233) during commissioning, the factory preset parameters will be lost and set back to their default value (except the ones of the motor rating). For more information, please refer to section 2.1.6, page 8.

00.001 (01.007)	Minimum Speed			
Read-Write	↕	± VM_NEGATIVE_REF_CLAMP1 (Hz)	→	10.00 Hz

Set Pr **00.001** at the required minimum output frequency of the drive for both directions of rotation. The drive speed reference is scaled between Pr **00.001** and Pr **00.002**. Pr **00.001** is a nominal value; slip compensation may cause the actual frequency to be higher.

00.002 (01.006)	Maximum Speed			
Read-Write	↕	± VM_POSITIVE_REF_CLAMP (Hz)	→	50.00 Hz*

* 80.00 Hz for a gear-motor

Set Pr **00.002** at the required maximum output frequency for both directions of rotation. The drive speed reference is scaled between Pr **00.001** and Pr **00.002**. Pr **00.002** is a nominal value; slip compensation may cause the actual frequency to be higher. The drive has additional over-speed protection.

00.003 (02.011)	Acceleration Rate			
Read-Write	↕	± VM_ACCEL_RATE (s/100 Hz)	→	5.0 s/100 Hz

Set Pr **00.003** at the required rate of acceleration. Note that larger values produce lower acceleration. The rate applies in both directions of rotation.

00.004 (02.021)	Deceleration Rate			
Read-Write	↕	± VM_ACCEL_RATE (s/100 Hz)	→	10.0 s/100 Hz

Set Pr **00.004** at the required rate of deceleration. Note that larger values produce lower deceleration. The rate applies in both directions of rotation.

00.005 (11.034)	Drive Configuration			
Read-Write	↕	See table below	→	STANDARD AV/AI

Use Pr **00.005** to select the required drive preset configuration. It will automatically control terminals and parameters **00.011** to **00.029** functions.

Before selecting a preset configuration, ensure the drive is disabled (open terminal 8 or 31/34) and Connect software is "On line" with the drive (for the auto-configuration to take place correctly).

For more details about drive preset configurations, refer to *section 5.6, page 30.*

Value	string	Action
11	STANDARD AV/AI	Voltage (ADI1) or current (ADI2) frequency reference selected by terminal
12	AV with Brake	Voltage frequency reference (ADI1) and motor PTC with Brake option
13	3PS/1Ana Brake	Voltage frequency reference (ADI1) or 3 preset references selected by terminals with Brake option - More dedicated to Commander ID302
14	3PS/1Ana NoBrake	Voltage frequency reference (ADI1) or 3 preset references selected by terminals (without Brake option)
15	8 Presets	Eight preset references selected by terminals
16	Keypad	Keypad reference and control
17	Keypad Ref	Keypad reference with terminal control
18	Electronic Pot	Electronic Potentiometer

Value	string	Action
19	Torque Control	Voltage frequency reference (ADI1) or voltage torque reference (ADI2) selected by terminal
20	Pid Control	Current reference source (ADI1) and voltage feedback source (ADI2)
21	Local/ Remote	Voltage frequency reference (ADI1) with terminal control or keypad reference with keypad control selected by terminal
22	Pump	Pump application (available for Commander ID300 only)

00.006 (05.007)	Motor Rated Current			
Read-Write	↕	0.00 to VM_RATED_CURRENT (A)	→	Dependent of the motor

This parameter is set to the continuous current of the motor, taken from the name plate.

CAUTION
Already set by default.
The motor rated current is used in current limits, motor thermal overload protection, vector mode voltage control, slip compensation and dynamic V/F control.

00.007 (05.008)	Motor Rated Speed			
Read-Write	↕	0.0 to 9000.0 rpm	→	Dependent of the motor

This parameter is set to the rated speed of the motor, taken from the motor name plate. The motor rated speed is used to calculate the correct slip speed for the motor.

CAUTION
Already set by default.

00.008 (05.009)	Motor Rated Voltage			
Read-Write	↕	± VM_AC_VOLTAGE_SET (V)	→	Dependent of the motor

The Rated Voltage Pr **00.008** and the Rated Frequency Pr **00.039** are used to define the voltage to frequency characteristic applied to the motor.

CAUTION
Already set by default.

00.009 (05.010)	Motor Rated Power Factor			
Read-Write	↕	0.00 to 1.00	→	Dependent of the motor

This parameter is set to the motor rated power factor cos φ, taken from the motor name plate. The drive can measure the motor rated power factor by performing a rotating autotune (see Pr **00.038** if necessary).

CAUTION
Already set by default.

00.010 (11.044)	User Security Status			
Read-Write	↕	See table below	→	Level 1

This parameter controls access via the integrated or remote drive keypad (if present) as follows:

Value	Mode	Function
0	Level 1	Access to first 10 parameters in Menu 0 only
1	Level 2	All parameters in Menu 0 are visible and available for editing.
2	All Menus	Parameters in all menus are visible and available for editing.
3	Status Only	The keypad remains in status mode, no parameters can be viewed or edited.
4	No Access	The keypad remains in status mode, no parameters can be viewed or edited. Drive parameters cannot be accessed via a comms/fieldbus interface in the drive or any fieldbus module.

For more details, refer to *section 2.1.9, page 8* and *section 2.1.10, page 9*.

00.011 to 00.029	Preset configuration parameters

As these parameters are dependent of the selected preset configuration (see Pr **00.005**), relevant parameter explanations are located with each preset configuration details, refer to dedicated sections as follows:

Preset configuration	Section
STANDARD AV/AI	*section 5.6.1, page 30*
AV with brake	*section 5.6.2, page 35*
3PS/1Ana brake	*section 5.6.3, page 42*
3PS/1Ana Nobrake	*section 5.6.4, page 48*
8 Presets	*section 5.6.5, page 52*
Keypad	*section 5.6.6, page 56*
Keypad Ref	*section 5.6.7, page 60*
Electronic Pot	*section 5.6.8, page 64*
Torque Control	*section 5.6.9, page 69*
Pid Control	*section 5.6.10, page 73*
Local/Remote	*section 5.6.11, page 77*
Pump	*section 5.6.12, page 82*

Before selecting a preset configuration, ensure the drive is disabled (open terminal 8 or 31/34) and Connect software is "On line" with the drive (for the auto-configuration to take place correctly).

00.030 (02.004)	Ramp Mode Select			
Read-Write	↕	Fast(0), Standard(1), Std boost(2), Fast boost(3)	→	Fast(0)

This parameter defines the mode used by the drive ramp system.

Value	Mode	Function
0	Fast	Fast ramp is linear deceleration at programmed rate. Should be used when a braking resistor is installed.
1	Standard	Standard ramp is controlled deceleration to prevent DC bus over-voltage trips, normally used. If a high motor voltage mode is selected, deceleration rates can be faster for a given inertia but motor temperatures will be higher.
2	Std boost	Standard ramp with motor voltage boost (20%) to increase motor losses and reduce the deceleration time.
3	Fast boost	Fast ramp with motor voltage boost (20%) to increase motor losses and reduce the deceleration time.

If Pr 00.032/05.013 is set to 0 and Pr 00.030/02.004 to Standard(1) at the same time, DC regulation can increase the motor speed up to its rated value. See explanation of this phenomena in *section 7.7, page 129.*

00.031 (06.001)	Stop Mode			
Read-Write	↕	Coast(0), Ramp(1), Ramp dc I(2), dc I(3),Timed dc I(4), Disable(5)	→	Ramp(1)

This parameter defines how the motor is controlled when the run signal is removed from the drive.

Value	Mode	Description
0	Coast	Coast stop
1	Ramp	Ramp stop
2	Ramp dc I	Ramp stop + 1 second dc injection
3	dc I	Injection braking stop with detection of zero speed. The drive automatically senses low speed and adjusts the injection time to suit the application.
4	Timed dc I	Timed injection braking stop (injection braking time is 2 seconds).
5	Disable	Inverter disabled. Allows drive to be disabled then re-enabled immediately.

00.032 (05.013)	Dynamic V To F Select			
Read-Write	↕	0 or 1	→	1

Set to 1 to enable Dynamic V to F mode.

Value	Description
0	Fixed linear voltage to frequency ratio (constant torque - standard load)
1	Voltage to frequency ratio dependent on load current. This gives a higher motor efficiency.

CAUTION
In the case of no load condition for dynamic applications, it is advisable to set Pr 00.032/05.013 to 1.

If Pr 00.032/05.013 is set to 0 and Pr 00.030/02.004 to Standard(1) at the same time, DC regulation can increase the motor speed up to its rated value. See explanation of this phenomena in *section 7.7, page 129.*

00.033 (06.009)	Catch A Spinning Motor			
Read-Write	↕	Disable(0), Enable(1), Fwd Only(2), Rev Only(3)	→	Disable (0)

If this function is enabled, a test is carried out to measure the motor frequency.

If the drive is to be configured in fixed boost mode (Pr **00.041** = Fixed, Square or fixed tapered) with catch a spinning motor software enabled, an autotune (see Pr **00.038**) must be carried out to measure the motor's stator resistance beforehand. If a stator resistance is not measured, the drive may trip on 'Over Volts' or 'OI ac' while trying to catch a spinning motor.

Value	Mode	Function
0	Disable	Disabled
1	Enable	Detect all frequencies
2	Fwd Only	Detect positive frequencies only
3	Rev Only	Detect negative frequencies only

00.034 (01.010)	Bipolar reference enable			
Read-Write	↕	0 or 1	→	0

This parameter determines whether the reference is uni-polar or bi-polar. Set to 1 for bipolar reference.

00.035 (08.081)	DIO1 Input Control			
Read-Write	↕	0 to 26	→	0

This parameter determines the function of DIO1 when it is set as a digital input.

Value	Description
0	User defined by Digital IO1 Source/Destination A (Pr **08.021**)
1	Multi preset ref selection 1 (Pr **01.045**)
2	Multi preset ref selection 2 (Pr **01.046**)
3	Multi preset ref selection 3 (Pr **01.047**)
4	External stop command (Pr **06.039**)
5	Acc time selection 1 (Pr **02.032**)
6	Acc time selection 2 (Pr **02.033**)
7	Acc time selection 3 (Pr **02.034**)

Value	Description
8	Speed control and torque control switcher (Pr **04.011**)
9	External fault N.C. contact input (Pr **10.032**)
10	External reset (Pr **10.033**)
11	External jog fwd (Pr **06.031**)
12	External jog rev (Pr **06.037**)
13	Drive enable (Pr **06.015**)
14	Ramp hold (Pr **02.003**)
15	RUN FWD (Pr **06.030**)
16	RUN REV (Pr **06.032**)
17	3-line run control (Latching) (Pr **06.040**)
18	Forward limit switch (Pr **06.035**)
19	Reverse limit switch (Pr **06.036**)
20	Main ref channel selection 3 (Pr **01.043**)
21	Main ref channel selection 2 (Pr **01.042**)
22	Main ref channel selection 3 (Pr **01.041**)
23	PID1 Enable (Pr **14.008**)
24	Motor 1/2 switcher (Pr **11.045**)
25	Motorised pot UP (Pr **09.026**)
26	Motorised pot DOWN (Pr **09.027**)

00.036	**Not used**

00.037 (05.018)	**Maximum Switching Frequency**			
Read-Write	↕	2(2); 3(3); 4(4); 6(5); 8(6); 12(7); 16(8) kHz	→	3 kHz (3)

This parameter defines the maximum switching frequency that can be used by the drive.

00.038 (05.012)	**Autotune**			
Read-Write	↕	0 to 2	→	0

Defines the auto-tune test to be performed.

Value	Description
0	Autotune disabled.
1	A stationary autotune can be used when the motor is loaded and it is not possible to remove the load from the motor shaft. It measures the stator resistance (required for control mode and for Catch a spinning motor function) and the transient inductance (to improve performance). To perform a stationary autotune, set Pr **00.038** to 1.
2	A rotating autotune should only be used if the motor is unloaded. A rotating autotune first performs a stationary autotune, as above, then a rotating test is performed in which the motor is accelerated with currently selected ramps up to a frequency of Rated Frequency (Pr **00.039**) x 2/3, and the frequency is maintained at that level for 4 seconds. In addition to stationary measurements, this autotune measures motor rated voltage and stator inductance (required for basic control). To perform a Rotating autotune, set Pr **00.038** to 2.

NOTE

• A rotating autotune should be used whenever possible (with unloaded motor) so the measured value of power factor of the motor is used by the drive.
• A stationary autotune is already performed once at factory.
• A stationary autotune occurs after each procedure to restore drive default settings.

A rotating autotune will cause the motor to accelerate up to 2/3 base speed in the direction selected regardless of the reference provided. Once complete the motor will coast to a stop. The enable signal must be removed before the drive can be made to run at the required reference. The drive can be stopped at any time by removing the run signal or removing the drive enable or opening STO terminals.

00.039 (05.006)	**Motor Rated Frequency**			
Read-Write	↕	0.00 to 150.00 Hz	→	50.00 Hz

This parameter is set to the value from the name plate of the motor. Defines the voltage to frequency ratio applied to the motor.

00.040 (05.011)	**Number Of Motor Poles**			
Read-Write	↕	0 to 16	→	0

Set to the number of pole pairs of the motor. When it is set to 0, the number of motor poles is automatically calculated from the settings of Pr **00.007** and Pr **00.039**.

NOTE

When viewed with a keypad, the value of 0 is displayed as Automatic and any non 0 value is displayed as twice the parameter value, representing number of motor poles rather than pole pairs.

00.041 (05.014)	**Control Mode**			
Read-Write	↕	Ur S(0), Ur(1), Fixed(2), Ur Auto(3), Ur I(4), Square(5), Fixed tapered(6)	→	Ur I(4)

This parameter defines the drive output mode, which can either be a voltage mode or a current mode as given below.

Value	Mode	Description
0	Ur S	Stator resistance and voltage offset measured at each start. This method controls the flux level correctly in the motor in the steady state.
1	Ur	No measurements
2	Fixed	Fixed boost mode, see the curve below.
3	Ur Auto	Stator resistance and voltage offset measured at first drive enable
4	Ur I	Stator resistance and voltage offset measured at each power-up
5	Square	Square law characteristic, see the curve hereafter.
6	Fixed Tapered	Fixed boost with zero slip at zero reference

For more details, refer to the Parameter reference guide (www.commanderID300.info).

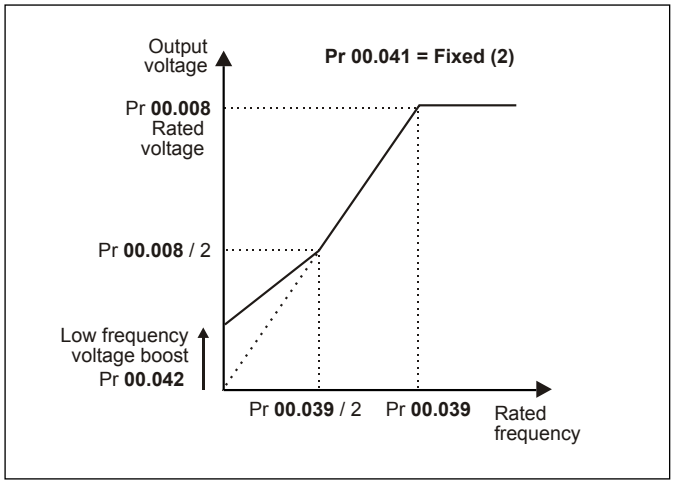

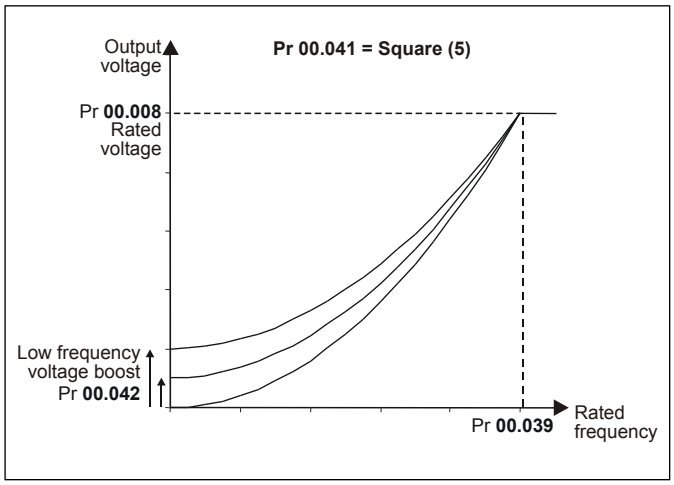

NOTE

The drive default setting is Ur I mode which means that the drive will carry out an autotune every time it is powered-up and enabled. If the load is not going to be stationary when the drive is powered-up and enabled, then one of the other modes should be selected. Not selecting another mode could result in poor motor performance or 'OI ac', 'Motor Too Hot' or 'Over Volts' trips.

00.042 (05.015)	Low Frequency Voltage Boost			
Read-Write	↕	0.0 to 25.0 %	→	3.0 %

This parameter determines the boost level when Pr **00.041** is set to Fixed, Square or Fixed Tapered modes.

00.043 (11.025)	Serial Baud Rate			
Read-Write	↕	600(1), 1200(2), 2400(3), 4800(4), 9600(5), 19200(6), 38400(7), 57600(8), 76800(9), 115200(10) bauds	→	115200 (10) bauds

This parameter defines the baud rate used by the serial comms interface. Changing the parameter does not immediately change the serial communications settings. See Reset Serial Communications (Pr **00.045**) for more details.

NOTE

If drive baud rate value is changed from its default value (Pr **00.043(11.025)** at 115200 bauds), Connect software will work correctly but slower. However, if ID-SIZEx-Keypad option is used at the same time, it will no longer be able to communicate with the drive.

00.044 (11.023)	Serial Address			
Read-Write	↕	1 to 247	→	1

This parameter is used to define the unique address for the drive for the serial interface. The drive is always a slave. Address 0 is used to globally address all slaves, and so this address should not be set in this parameter.

Changing the parameter does not immediately change the serial communications settings. See Reset Serial Communications (Pr **00.045**) for more details.

00.045 (11.020)	Reset Serial Communications			
Read-Write	↕	0 or 1	→	0

Set to 1 to update communications set-up.

NOTE

Pr **00.045** is automatically cleared to zero after the communications system is updated.

00.046 (12.042)	Upper Current Threshold			
Read-Write	↕	0 to 200 %	→	50 %
00.047 (12.043)	**Lower Current Threshold**			
Read-Write	↕	0 to 200 %	→	10 %

The Current Magnitude (Pr **00.088**) is compared to an upper and lower threshold by a comparator with hysteresis to give torque present and drive output open circuit detection functions respectively.

Lower Current Threshold Pr **00.047** and Upper Current Threshold Pr **00.046** are given as a percentage of Motor Rated Current Pr **00.006**.

Upper Current Threshold should be set to the current level that indicates that there is magnetising current and sufficient torque producing current in the motor to deliver the required amount of torque when the brake is released. The output of the comparator remains active after this level has been reached unless the current subsequently falls below Lower Current Threshold which should be set to the required level to detect the condition where the motor has been disconnected from the drive.

00.048 (12.044)	Brake Release Frequency			
Read-Write	↕	0.00 to 20.00 Hz	→	1.00 Hz
00.049 (12.045)	**Brake Apply Frequency**			
Read-Write	↕	0.00 to 20.00 Hz	→	2.00 Hz

The frequency comparator is used on starting, to detect when the motor frequency has reached a level where the motor can produce the required amount of torque to ensure that the motor rotates in the demanded direction when the brake is released.

Brake Release Frequency Pr **00.048** should be set to a level slightly above the motor slip frequency that is likely to occur under the highest expected load that is applied to the motor when the brake is released.

The brake apply frequency threshold is used to ensure that the brake is applied before the motor frequency reaches zero and to prevent the motor rotating (in the reverse direction due to an

overhauling load for example) during the brake apply time. If the frequency falls below Brake Apply Frequency Pr **00.049**, but the motor is not required to stop (i.e. reversing direction without stopping) then Reference On Pr **00.091** will be one, and so the brake is not applied. This prevents the brake from activating and de-activating as the motor passes through zero speed. If the frequency falls below Brake Apply Frequency Pr **00.049** and Reference On Pr **00.091** = 0 then the brake will be applied.

00.050 (12.046)	Brake Release Delay			
00.051 (12.047)	Post-brake Release Delay			
Read-Write	↕	0.0 to 25.0 s	→	0.1 s

When both Current detection and Frequency detection conditions are met, the ramp is held and the brake released after the Brake Release Delay Pr **00.050**.

When the brake is released, the ramp is held for a further period set by Post-brake Release Delay Pr **00.051** after which the ramp is released.

00.052 (12.040)	Brake Release			
Read-Only	↕	0 or 1	→	-

When Pr **00.052** = 0, the brake should be applied.

When Pr **00.052** = 1, the brake should be released.

Normally this should be routed to a digital output to control the mechanical brake.
This is already pre-configured when preset configurations "AV with brake" and "3PS/1Ana brake" are selected. (DIO1 is the brake control output).
If Brake Controller Enable Pr **00.055** = 0, then the brake controller is disabled.

00.053 (12.050)	Initial Direction			
Read-Write	↕	Ref(0), Forward(1), Reverse(2)	→	Ref(0)

This parameter defines the initial direction of the brake.

Value	String	Description
0	Ref	The brake controller operates as standard and the user reference is used to define the direction of operation.
1	Forward	Pr **01.057** is used to force the frequency reference to the positive modulus of the selected user reference until the end of the post-brake release period whatever the direction of the user reference. This can be used by example to ensure that in a vertical application the motor will definitely hold the load at the point when the brake is released
2	Reverse	Pr **01.057** is used to force the frequency reference to minus the modulus of the user selected reference until the end of the post-brake release period to ensure that the output frequency is negative during this period.

NOTE

It should be noted that Pr **00.053** has no effect if Brake Apply Through Zero Threshold Pr **00.054** is non-zero, and the user reference direction is always used as the initial direction, to prevent a condition where the brake would release then apply repeatedly.

00.054 (12.051)	Brake Apply Through Zero Threshold			
Read-Write	↕	0.00 to 20.00 Hz	→	1.00 Hz

In Open-loop mode, the torque produced may reduce as the frequency passes through zero. To prevent the load from falling during this period in a vertical application, it is possible to apply the brake momentarily to hold the load.

If Brake Apply Through Zero Threshold Pr **00.054** = 0, then the brake is not applied when the frequency passes through zero unless Reference On Pr **00.091** = 0.

If Brake Apply Through Zero Threshold Pr **00.054** is non-zero, then the brake is always applied when the modulus of frequency is less than Brake Apply Through Zero Threshold Pr **00.054**, even if Reference On Pr **00.091** = 1. This ensures that the brake is applied and then released as the frequency passes through zero. Pr **00.054** should be set to a value that is lower than both Brake Release Frequency Pr **00.048** and Brake Apply Frequency Pr **00.049** so that it does not interfere with the control of the brake when starting and stopping.

00.055 (12.041)	Brake Controller Enable			
Read-Write	↕	Disable(0), Relay(1), Digital IO(2), User(3)	→	Disable (0)

This parameter defines the brake control as follows.

Value	Mode	Description
0	Disable	The brake controller is disabled.
1	Relay	The brake controller is enabled with I/O set up to control the brake via relay output. 'Drive OK' is re-routed to the digital I/O (DIO1).
2	Digital IO	The brake controller is enabled with I/O set up to control the brake via digital I/O (DIO1). 'Drive OK' is routed to the relay output.
3	User	The brake controller is enabled, but no parameters are set up to select the brake output.

The parameters which are used by the brake controller to operate the drive are reset to 0 on the transition of Brake Controller Enable Pr **00.055** from 1 to 0.

NOTE

• Action will only occur if the drive is inactive. Otherwise, the parameter will return to its pre-altered value on exit from edit mode.
• All parameters are saved if this parameter changes.
• When "AV with brake" or "3PS/1Ana brake" preset configuration is selected, Pr **00.055** is automatically set to Digital IO (2).

The control terminal relay can be selected as an output to release the brake (Pr 00.055/12.041 = Relay(1)). If a drive is set up in this manner and a drive replacement takes place or after restoring parameter defaults, prior to programming the drive on initial power up, the brake may be released.

00.056 (10.020)	Trip 0			
00.057 (10.021)	Trip 1			
00.058 (10.022)	Trip 2			
Read-Only	↕	0 to 255	→	-

These parameters show the current or last trip (trip 0), the 2nd from last trip (trip 1) and the 3rd from last trip (trip 2) to have occurred. Please refer to *section 8.3, page 136* for the relevant trip description.

00.059 (11.047)	Onboard User Program (OUP) Enable			
Read-Write	↕	Stop(0) or Run(1)	→	Run(1)

This parameter enables the onboard user program.

Onboard user programming provides a background task that loops continuously and a timed task that is executed each time at a defined rate.
For more details about Onboard PLC , refer to *section 7.6, page 127.*

00.060 (11.048)	Onboard User Program (OUP) Status			
Read-Only	↕	-2147483648 or 2147483647	→	-

This parameter indicates the status of the user program in the drive.
For more details about Onboard PLC , refer to *section 7.6, page 127.*

00.061 (11.030)	User Security Code			
Read-Write	↕	0 to 9999	→	0

This parameter defines the user security code of the drive. This parameter should be set to a value other than 0 to prevent unauthorised access to the drive. When a value has been set, it cannot be seen to prevent the security code from being read (a value of 0 is displayed). If a value has been set, the security code must be entered before any parameter can be adjusted via the keypad.

00.062 (11.019)	Status Mode Parameter 2			
Read-Write	↕	0.000 to 30.999	→	4.020
00.063 (11.018)	Status Mode Parameter 1			
Read-Write	↕	0.000 to 30.999	→	2.001

These parameters define which parameters are displayed in Status mode. The values can be alternated by pressing the Escape key, if the drive is running.

NOTE

By default, Pr **00.062** is set to parameter Pr **04.020** which shows the level of torque producing current as a percentage of rated torque producing current for the motor, and Pr **00.063** is set to parameter Pr **02.001** which displays the output of the ramp system.

00.064 (11.021)	Customer Defined Scaling			
Read-Write	↕	0.000 to 10.000	→	1.000

This parameter defines the scaling applied to Pr **00.063** Status Mode Parameter 1. The scaling is only applied in the Status mode.

00.065 to 00.068	Not used

00.069 (05.040)	Spin Start Boost			
Read-Write	↕	0.0 to 10.0	→	1.0

This parameter is used by the algorithm that detects the frequency of a spinning motor when the drive is enabled and Catch A Spinning Motor (Pr **00.033**) ≠ Disable (>1). For smaller motors the default value of 1.0 is suitable, but for larger motors it may need to be increased.

CAUTION

If Spin Start Boost is too small the drive will detect zero speed whatever the frequency of the motor, and if it is too large the motor may accelerate away from standstill when the drive is enabled.

00.070 to 00.075	Not used

00.076 (10.037)	Action On Trip Detection			
Read-Write	↕	0 to 31 (Display: 00000 - 11111)	→	0

The bits 0 to 4 can be set to 1 to enable some functions as defined below:

Bits	Function
0	Stop on defined non-important trips
1	Disable braking resistor overload detection
2	Disable phase loss stop
3	Disable braking resistor temperature monitoring
4	Disable parameter freeze on trip

00.077 (11.032)	Maximum Current Rating			
Read-Only	↕	0.00 to 9999.99 A	→	-

This parameter displays the maximum current rating of the drive.

00.078 (11.029)	Software version			
Read-Only	↕	0 to 999999	→	-

This parameter displays the software version in the drive as decimal number (wwxxyy).

00.079	Not used

00.080 (10.002)	Drive Active			
Read-Only	↕	0 or 1	→	-

If the drive inverter is active, Pr **00.080** is set to one, otherwise it is zero.

00.081 (01.001)	Reference Selected		
Read-Only	↕	± VM_SPEED_FREQ_REF (Hz)	→	-

This is the basic reference selected from the available sources.

00.082 (01.003)	Pre-ramp Reference		
Read-Only	↕	± VM_SPEED_FREQ_REF (Hz)	→	-

This is the final output from the reference system that is fed into the ramp system.

00.083 (03.001)	Final demand Reference		
Read-Only	↕	± VM_SPEED_FREQ_REF (Hz)	→	-

It shows the fundamental drive output frequency.

00.084 (05.005)	D.C. Bus Voltage		
Read-Only	↕	± VM_DC_VOLTAGE (V)	→	-

It shows the Voltage across the internal DC bus of the drive.

00.085 (05.001)	Output Frequency		
Read-Only	↕	± VM_SPEED_FREQ_REF (Hz)	→	-

This is the sum of the Post Ramp Reference and the motor slip compensation frequency.

00.086 (05.002)	Output Voltage		
Read-Only	↕	± VM_AC_VOLTAGE (V)	→	-

This is the rms line to line voltage at the AC terminals of the drive.

00.087 (05.004)	Motor Rpm		
Read-Only	↕	± 9000 rpm	→	-

Motor Rpm = 60 x Frequency / Pole pairs

where:

• Pole pairs = the numeric value of Number Of Motor Poles (Pr **00.040**) (i.e. 3 for a 6 pole motor)

• The frequency used to derive the Motor Rpm is the Final Demand Reference (Pr **00.083**).

00.088 (04.001)	Current Magnitude		
Read-Only	↕	± VM_DRIVE_CURRENT (A)	→	-

This is the instantaneous drive output current scaled so that it represents the r.m.s. phase current in Amps under steady state conditions.

00.089 (04.002)	Torque Producing Current		
Read-Only	↕	± VM_DRIVE_CURRENT (A)	→	-

This is the instantaneous level of torque producing current scaled so that it represents the r.m.s. level of torque producing current under steady state conditions.

00.090 (08.020)	Digital I/O Read Word		
Read-Only	↕	0 to 1023	→	-

It reflects the state of digital inputs/outputs DIO1, DI1 to DI4 and the relay.

Each bit matches the value of the state parameter for the respective digital input or output so the bit value for digital inputs will be the state of the actual input before any inversion selections are applied. The bit value for digital outputs will include the state inversion if selected in the invert parameter for the output.

Pr 00.090 Bits	Input/Output name
0	DIO1
1	DI2
2	DI3
3	DI4
4 to 8	Reserved
9	Relay

00.091 (01.011)	Reference On		
Read-Only	↕	Off or On	→	-

The Reference On, which is controlled by the drive sequencer, indicates that the reference from the reference system is active.

00.092 (01.012)	Reverse select		
Read-Only	↕	Off or On	→	-

The Reverse Select, which is controlled by the drive sequencer, is used to invert Pr **00.081** Reference Selected.

00.093	Not used

00.094 (07.001)	Analog/Digital Input 1		
00.095 (07.002)	Analog/Digital Input 2		
Read-Only	↕	± 100.00%	→	-

These parameters display the level of the analog signal present at analog input 1 (terminal 2) and analog input 2 (terminal 4).

5.6 - Parameters 00.011 to 00.029: Preset configuration details

This section details the control connections, quick commissioning and parameter explanations of each drive preset configurations. The default preset configuration is 'STANDARD AV/AI (11)' but it is set to 'AV with brake (12)' at factory if a brake is fitted to the motor.

5.6.1 - STANDARD AV/AI: Voltage (ADI1) or current (ADI2) frequency reference selected by terminal

• Application examples
Most of general purpose applications, usually associated with PLC I/Os.

• Control connections required

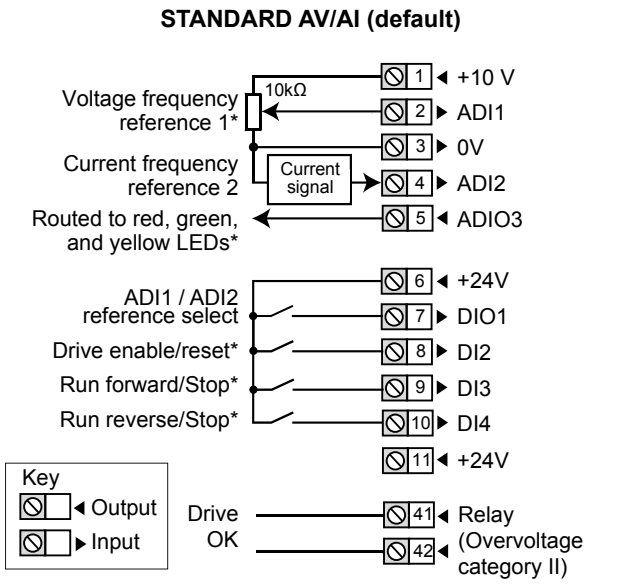

*** Some connections are not necessary in the following cases:**

- If there is a local potentiometer (side flange options), ADI1 is already connected.
- If there are LEDs on side flange option, ADIO3 is already connected to them but yellow LED has no function by default. If needed, user defined function can be set with Pr **00.027** (see *section 3.5, page 12*).
- DI2 has no function assigned by default on Commander ID302. For STO connection details, see *section 3.2, page 11*.
- If there are local command buttons (side flange option), DI3 and DI4 are already connected.

NOTE

• If the motor has a PTC probe option, it is connected between ADI2 and 0V terminals at factory. For the drive to manage the PTC, Pr **00.014** is also set to 'Thermistor(2)'. Of course in this case, only voltage frequency reference can be used on ADI1 and DIO1 should remain open (low level).

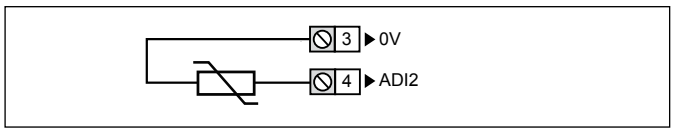

• If this default preset configuration does not suit the application, select another one by setting Pr **00.005**.

• Parameter list dedicated to this configuration

Parameter		Function	Range	Default value
Menu 0	Adv. menu			
00.011	07.007	ADI1 Mode	4-20mA Stop(-6), 20-4mA Stop (-5), 4-20mA Low (-4), 20-4mA Low (-3), 4-20mA Hold (-2), 20-4mA Hold (-1), 0-20mA (0), 20-0mA (1), 4-20mA Trp (2), 20-4mA Trp (3), 4-20mA (4), 20-4mA (5), Voltage (6), Digital (7)	Voltage (6)
00.012	07.011	ADI2 Mode		4-20mA (4)
00.013	-	Not used		
00.014	07.045	ADI2 Thermistor Mode	An/Dig Input (0), Therm Short Cct (1), Thermistor (2), Therm No Trip (3)	An/Dig Input (0)
00.015	07.047	Thermistor Feedback	0 to 4000 Ω	-
00.016	07.008	ADI1 Scaling	0 to 10.000	1.000
00.017	07.012	ADI2 Scaling	0 to 10.000	1.000
00.018	-	Not used		
00.019	07.009	ADI1 Invert	0 or 1	0
00.020	07.013	ADI2 Invert	0 or 1	0
00.021	07.030	ADI1 Offset	± 100.00 %	0.00 %
00.022	07.031	ADI2 Offset	± 100.00 %	0.00 %
00.023	-	Not used		
00.024	07.020	ADIO3 Output Scaling	0.000 to 40.000	1.000
00.025	07.057	ADIO3 Output Control	0 to 16	16
00.026	08.022	DI2 Destination	0.000 to 30.999	• ID300: **06.038** • ID302: 0.000
00.027	07.019	ADIO3 Yellow LED Source	0.000 to 30.999	0.000
00.028	08.024	DI4 Destination	0.000 to 30.999	**06.032**
00.029	07.003	ADIO3 Output State	± 100.00 %	-

• Parameter diagram for more advanced commissioning

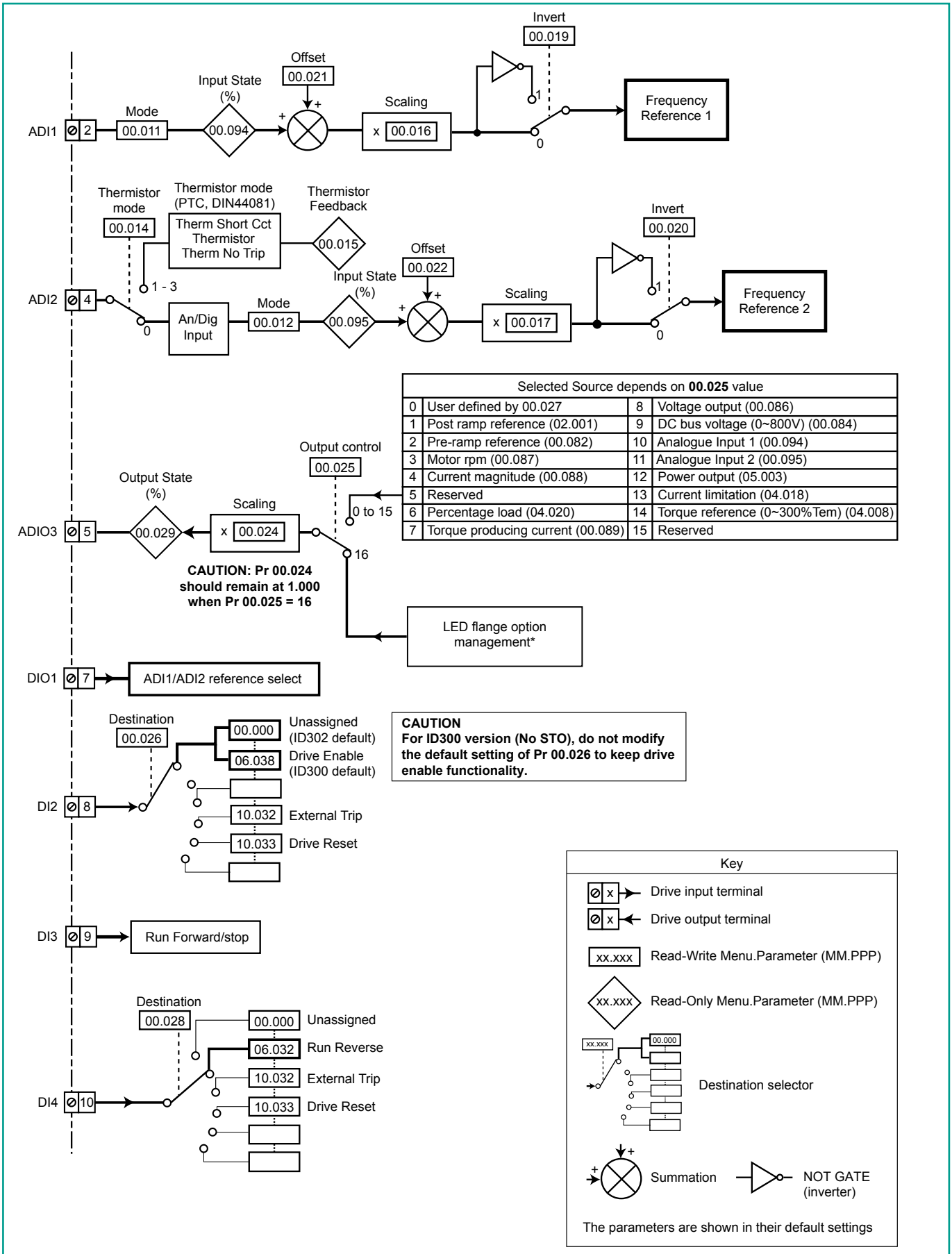

Selected Source depends on **00.025** value			
0	User defined by 00.027	8	Voltage output (00.086)
1	Post ramp reference (02.001)	9	DC bus voltage (0~800V) (00.084)
2	Pre-ramp reference (00.082)	10	Analogue Input 1 (00.094)
3	Motor rpm (00.087)	11	Analogue Input 2 (00.095)
4	Current magnitude (00.088)	12	Power output (05.003)
5	Reserved	13	Current limitation (04.018)
6	Percentage load (04.020)	14	Torque reference (0~300%Tem) (04.008)
7	Torque producing current (00.089)	15	Reserved

* See *section 3.5, page 12* for details.

• FOR A QUICK COMMISSIONING (FROM DEFAULT SETTINGS)

- Make the required control connections as indicated above.
- During parameter setting, the drive must be disabled (terminal 8 or terminals 31 and 34 are open)
- Power up the drive
- If required set the maximum frequency Pr **00.002** (Hz), minimum frequency Pr **00.001** (Hz), acceleration rate Pr **00.003** (s/100 Hz) and deceleration rate Pr **00.004** (s/100Hz).
- DIO1 will select the frequency reference as follows:

DIO1	Selected reference
Open	Voltage frequency reference on ADI1 (0-10V)
Closed	Current frequency reference on ADI2 (4-20mA)

- Close the Enable terminal 8 or the STO terminals 31 & 34
- Give a Run Forward or Run Reverse command by closing either terminal 9 or 10, or press the relevant button from the flange option.
- Adjust the frequency reference by tuning the potentiometer until the correct speed reference is reached.
- Stopping the motor: open terminal 9 or 10 to stop the motor under ramp control or remove the Enable signal by opening terminal 8 or 31 & 34 and the motor will coast to a stop. With the flange option, press the Stop button.

• Parameter explanation

00.011 (07.007)	**ADI1 Mode**			
Read-Write	↕	See table below	→	Voltage
00.012 (07.011)	**ADI2 Mode**			
Read-Write	↕	See table below	→	4-20 mA

The table below gives all the possible input modes.

Value	Mode	Function
-6	4-20mA Stop	4-20mA or 20-4 mA signal with stop on current loss (1)
-5	20-4mA Stop	
-4	4-20mA Low	4-20mA or 20-4 mA signal with switching to equivalent of 4mA input current on current loss (1)
-3	20-4mA Low	
-2	4-20mA Hold	4-20mA or 20-4 mA signal with hold at level before loss on current loss (1)
-1	20-4mA Hold	
0	0-20mA	0-20mA or 20-0mA signal
1	20-0mA	
2	4-20mA Trp	4-20mA or 20-4 mA signal with 'An Input 1 or 2 Loss' trip on current loss (1)
3	20-4mA Trp	
4	4-20mA	4-20mA or 20-4 mA signal with no action on current loss (1)
5	20-4mA	
6	Voltage	Voltage signal
7	Digital	Digital

(1) Current loss: the current is below 3mA.

NOTE

If Pr **00.014** is set to 'Therm Short Cct', 'Thermistor' or 'Therm No Trip', the ADI2 function is forced to be a thermistor input. Thus the setting of Pr **00.012** is not active. To be able to use Pr **00.012,** Pr **00.014** should be set to 'An/Dig input'.

00.013	**Not used**

00.014 (07.045)	**ADI2 Thermistor Mode**			
Read-Write	↕	An/Dig Input(0), Therm Short Cct(1), Thermistor(2), Therm No Trip(3)	→	An/Dig Input(0)

This parameter defines ADI2 mode which can be an analog or digital input, or a temperature measurement of a thermistor. The thermistor can be connected between ADI2 and 0V. By default, the thermistor type is a PTC (DIN44081). If another thermistor is used, refer to Pr **07.046** in the Parameter Reference Guide (www.commanderID300.info).

Value	Mode	Function
0	An/Dig Input	Input mode defined by Pr **00.012**
1	Therm Short Cct	Temperature measurement input with short circuit detection (Resistance <50 Ω) with 'Th Short Circuit' trip
2	Thermistor	Temperature measurement input without short circuit detection but with 'Thermistor' trip
3	Therm No Trip	Temperature measurement input with no trip

00.015 (07.047)	**Thermistor Feedback**			
Read-Only	↕	0 to 4000 Ω	→	-

This parameter shows the measured resistance of the thermistor connected to ADI2 (if thermistor connected and set correctly, see Pr **00.014** for more details).

00.016 (07.008)	**ADI1 Scaling**			
00.017 (07.012)	**ADI2 Scaling**			
Read-Write	↕	0 to 10.000	→	1.000

These parameters are used, if necessary, to scale the analog inputs. However, this rarely proves necessary since the maximum input level (100%) automatically corresponds to the maximum value of the destination parameter. Pr **00.016** and **00.017** have no effect if ADI1 Mode (**00.011**) or ADI2 Mode (**00.012**) = Digital.

00.018	**Not used**

00.019 (07.009)	**ADI1 Invert**			
00.020 (07.013)	**ADI2 Invert**			
Read-Write	↕	0 or 1	→	0

These parameters are used, if necessary, to invert the input signal.

00.021 (07.030)	ADI1 Offset			
00.022 (07.031)	ADI2 Offset			
Read-Write	↕	± 100.00 %	→	0.00 %

These parameters are used, if necessary, to add an offset to the Analog inputs 1 and 2.
Pr **00.020** and **00.021** have no effect if ADI1 Mode (**00.011**) or ADI2 Mode (**00.012**) = Digital.

00.023	Not used

00.024 (07.020)	ADIO3 Output Scaling			
Read-Write	↕	0.000 to 40.000	→	1.000

This parameter is used, if necessary, to scale the analog output. However, this rarely proves necessary since the maximum output level (100%) automatically corresponds to the maximum value of the source parameter.

CAUTION
Pr 00.024 should remain at 1.000 if Pr 00.025 Output Control is set to 16 (LED management).

00.025 (07.057)	ADIO3 Output Control			
Read-Write	↕	0 to 16	→	16

This parameter offers a simple way to change the source function of the ADIO3 output.

• If Pr 00.025 = 0 to 15

Value	ADIO3 Source	Description
0	**00.000**	User defined by Pr **00.027** (no LED management). No source assigned by default
1	**02.001**	Post Ramp frequency reference
2	**00.082**	Pre Ramp frequency reference
3	**00.087**	Motor rpm
4	**00.088**	Current Magnitude
5	**-**	Reserved
6	**04.020**	Percentage load. Gives Pr **00.089(04.002)** Torque Producing Current as a percentage.
7	**00.089**	Torque producing current
8	**00.086**	Voltage output
9	**00.084**	DC bus voltage
10	**00.094**	Analogue Input 1
11	**00.095**	Analogue Input 2
12	**05.003**	Power output
13	**04.018**	Current limit
14	**04.008**	Torque reference
15	**-**	Reserved

• If Pr 00.025 = 16
ADIO3 is used to control the illumination of the 3 LED's on flange option if fitted.

The **Red LED** is illuminated if the drive is in a trip state, flashes if the drive is running with an alarm condition, and is off if the drive is healthy and not in an alarm condition.

The **Green LED** is illuminated if the input supply is healthy, flashes if the input supply is healthy and the drive output is active, and is off if the incoming supply is not healthy.

The **Yellow LED** is user defined and can be used to indicate any parameter by setting Pr **00.027**.

To know the output voltage value for the defined LED states, please see Pr **00.029**.

For more information about LED management, refer to *section 3.5, page 12*.

00.026 (08.022)	DI2 Destination			
Read-Write	↕	0.000 to 30.999	→	• ID300: 06.038 • ID302: 0.000

This parameter defines the input (destination) parameter for digital input 2.

As an example, find below parameters that could be set in Pr **00.026** if required.

Pr	Description
10.032	External trip
10.033	Drive reset

NOTE
For the Commander ID300, this input is assigned to the user enable function (Pr **06.038**) by default , and is not assigned for Commander ID302.

00.027 (07.019)	ADIO3 Yellow LED Source			
Read-Write	↕	0.000 to 30.999	→	0.000

This parameter defines the output (source) parameter that activates yellow LED.

As an example, find below parameters that could be set in Pr **00.027** if required.

Pr	Description
06.029	Hardware enable
10.003	Zero frequency
10.006	At frequency
10.009	Current limit active

00.028 (08.024)	DI4 Destination			
Read-Write	↕	0.000 to 30.999	→	06.032

This parameter defines the input (destination) parameter for digital input 4.

As an example, find below parameters that could be set in Pr **00.028** if required.

Pr	Description
10.032	External trip
10.033	Drive reset

NOTE
By default, this input is assigned to the Run Reverse function (Pr **06.032**). If necessary it can be disabled by setting Pr **00.028** to 0.000.

00.029 (07.003)	ADIO3 Output State			
Read-Only	↕	± 100.00 %	→	-

ADOI3 is used to control the illumination of the 3 LED's on flange option if fitted (Red, Green and Yellow LEDs). Pr **00.029** displays the level of the analog signal.

NOTE

By default, Yellow LED is not active. See Pr **00.027** if required.

For more information about LED management, refer to *section 3.5, page 12*.

5.6.2 - AV with brake: Voltage frequency reference (ADI1) and motor PTC (with Brake option)

• Application examples
Horizontal and vertical handling, transfer table.

• Control connections required

AV with brake (default)

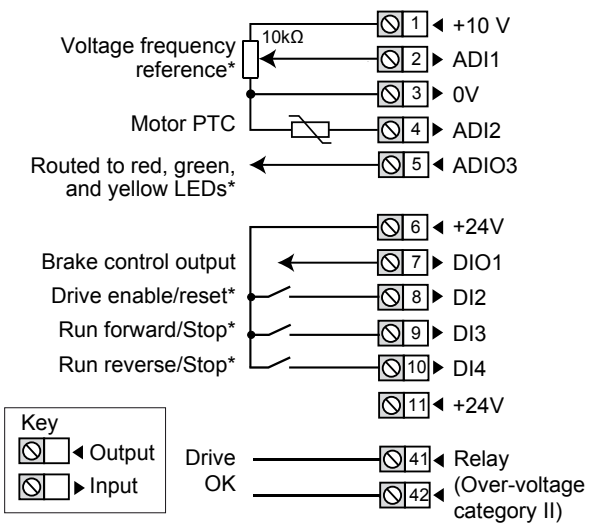

*** Some connections are not necessary in the following cases:**

- If there is a local potentiometer (side flange options), ADI1 is already connected.
- If there are LEDs on side flange option, ADIO3 is already connected to them but yellow LED has no function by default. If needed, user defined functions can be set with Pr **00.027** (see *section 3.5, page 12*).
- DI2 has no function assigned by default on Commander ID302. For STO connection details, see *section 3.2, page 11*.
- If there are local command buttons (side flange option), DI3 and DI4 are already connected.

NOTE

• This is the preset configuration that is set at factory for a brake motor. If it does not suit the application, select the other one that can manage a motor brake by setting Pr **00.005** = 3PS/1Ana brake (13).

• If the motor has no PTC probe, there is no connection on ADI2 and 0V terminals done at factory. To avoid any trip from the drive, Pr **00.014** is also set to 'Therm No Trip(3)'.

• Parameter list dedicated to this configuration

Parameter		Function	Range	Default value
Menu 0	Adv. menu			
00.011	07.007	ADI1 Mode	4-20mA Stop(-6), 20-4mA Stop (-5), 4-20mA Low (-4), 20-4mA Low (-3), 4-20mA Hold (-2), 20-4mA Hold (-1), 0-20mA (0), 20-0mA (1), 4-20mA Trp (2), 20-4mA Trp (3), 4-20mA (4), 20-4mA (5), Voltage (6), Digital (7)	Voltage (6)
00.012	-	Not used		
00.013				
00.014	07.045	ADI2 Thermistor Mode	An/Dig Input (0), Therm Short Cct (1), Thermistor (2), Therm No Trip (3)	Thermistor (2)
00.015	07.047	Thermistor Feedback	0 to 4000 Ω	-
00.016	07.008	ADI1 Scaling	0.000 to 10.000	1.000
00.017	-	Not used		
00.018				
00.019	07.009	ADI1 Invert	0 or 1	0
00.020	07.013	ADI2 Invert	0 or 1	0
00.021	08.011	DIO1 Invert	0 or 1	0
00.022	08.001	DIO1 Output State	0 or 1	-
00.023	07.014	ADI2 Destination	0.000 to 30.999	0.000
00.024	07.020	ADIO3 Output scaling	0.000 to 40.000	1.000
00.025	07.057	ADIO3 Output Control	0 to 16	16
00.026	08.022	DI2 Destination	0.000 to 30.999	• ID300: **06.038** • ID302: 0.000
00.027	07.019	ADIO3 Yellow LED Source	0.000 to 30.999	0.000
00.028	08.024	DI4 Destination	0.000 to 30.999	**06.032**
00.029	07.003	ADIO3 Output State	± 100.00 %	-

• Parameter diagram for more advanced commissioning

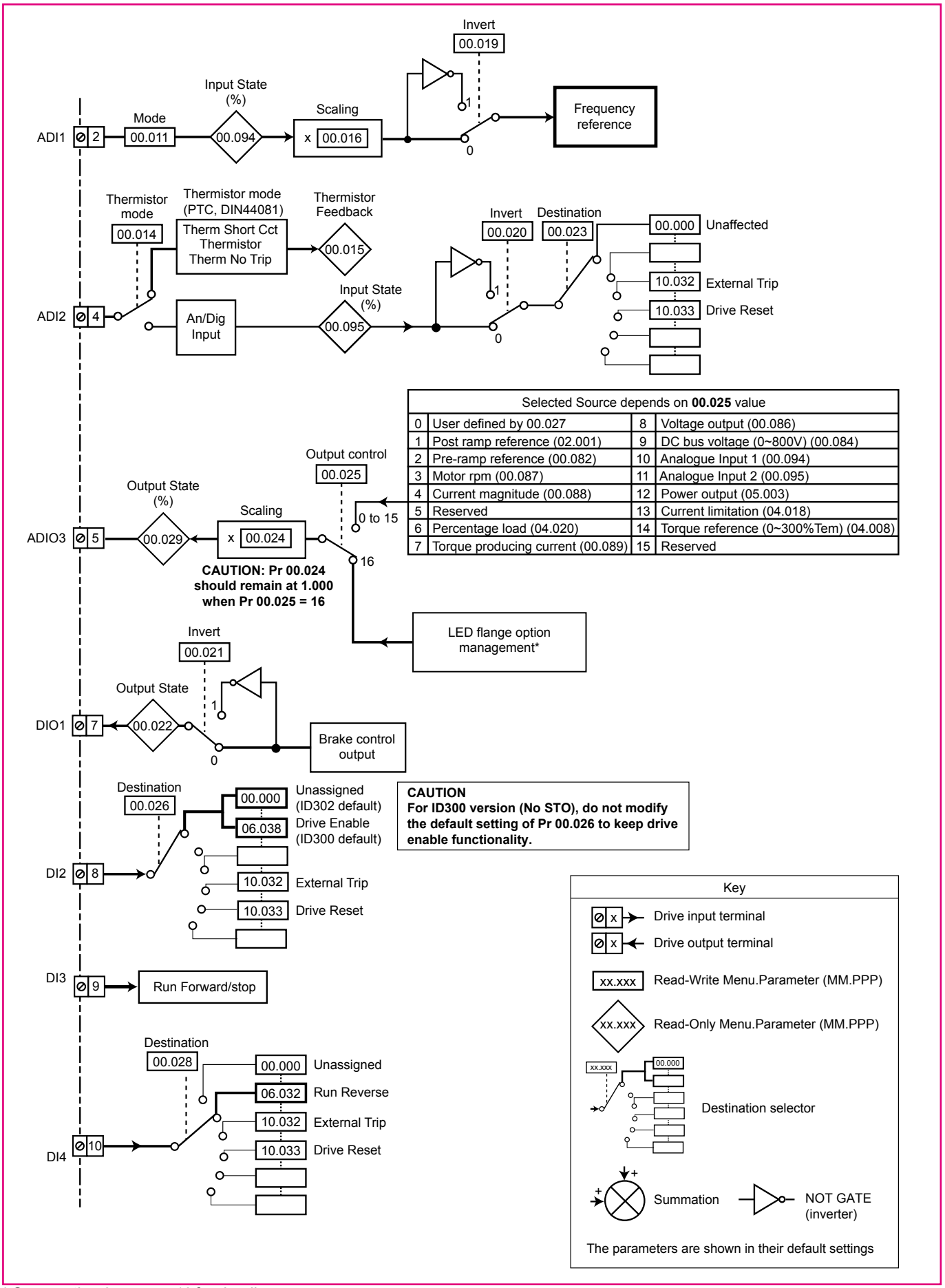

Selected Source depends on **00.025** value			
0	User defined by 00.027	8	Voltage output (00.086)
1	Post ramp reference (02.001)	9	DC bus voltage (0~800V) (00.084)
2	Pre-ramp reference (00.082)	10	Analogue Input 1 (00.094)
3	Motor rpm (00.087)	11	Analogue Input 2 (00.095)
4	Current magnitude (00.088)	12	Power output (05.003)
5	Reserved	13	Current limitation (04.018)
6	Percentage load (04.020)	14	Torque reference (0~300%Tem) (04.008)
7	Torque producing current (00.089)	15	Reserved

CAUTION
For ID300 version (No STO), do not modify the default setting of Pr 00.026 to keep drive enable functionality.

* See *section 3.5, page 12* for details.

• Brake control parameters

Parameter		Function	Range	Default value
Menu 0	Adv. menu			
00.046	12.042	Upper Current Threshold	0 to 200 %	50 %
00.047	12.043	Lower Current Threshold	0 to 200 %	10 %
00.048	12.044	Brake Release Frequency	0.00 to 20.00 Hz	1.00 Hz
00.049	12.045	Brake Apply Frequency	0.00 to 20.00 Hz	2.00 Hz
00.050	12.046	Brake Release Delay	0.0 to 25.0 s	1.0 s
00.051	12.047	Post-brake Release Delay	0.0 to 25.0 s	1.0 s
00.052	12.040	Brake release	0 or 1	-
00.053	12.050	Initial Direction	Ref(0), Forward(1), Reverse(2)	Ref(0)
00.054	12.051	Brake Apply Through Zero Threshold	0.00 to 20.00 Hz	1.00 Hz
00.055	12.041	Brake Controller Enable	Disable(0), Relay(1), Digital IO(2), User(3)	Digital IO(2)

• Brake control operation

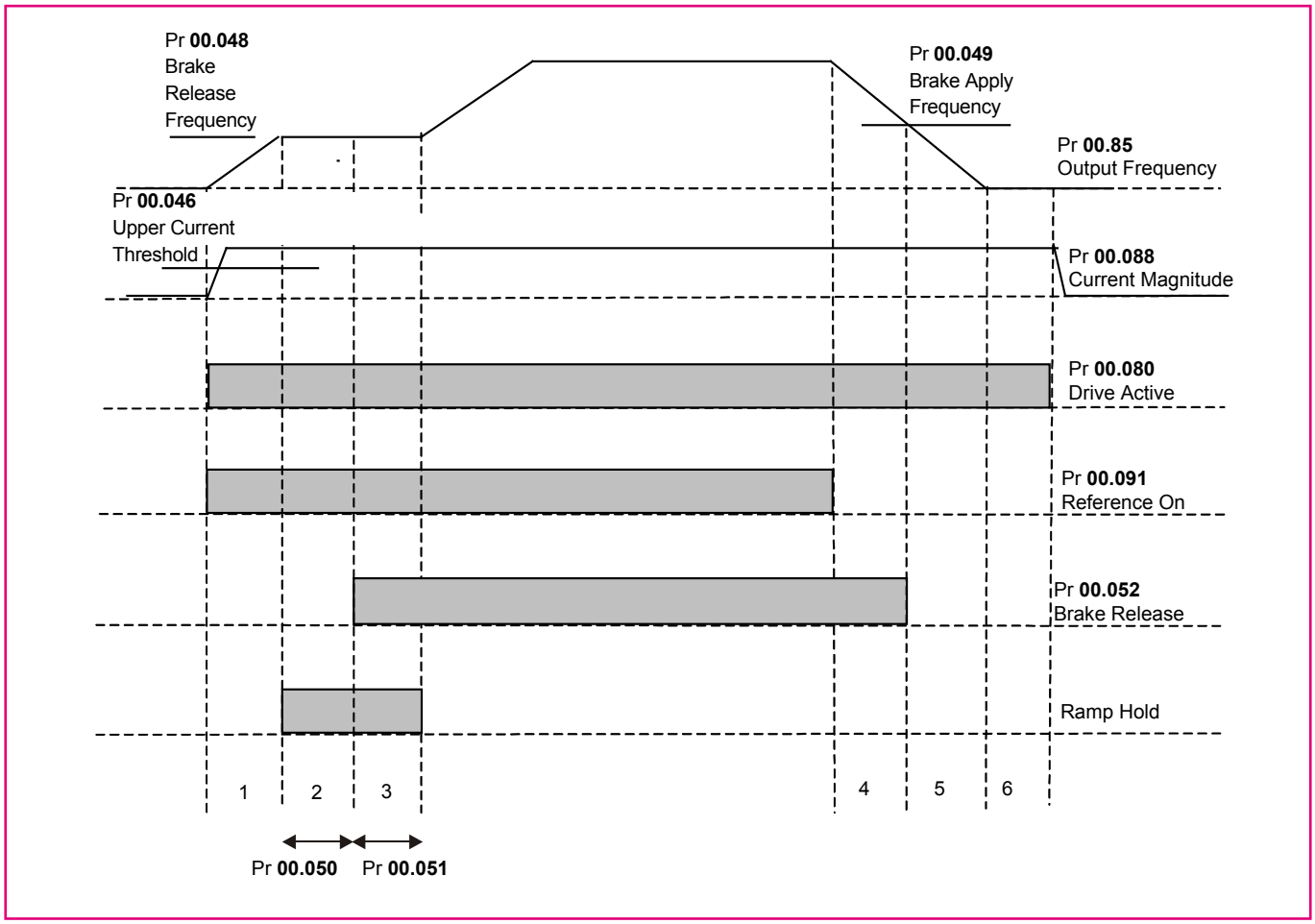

1. Wait for upper current threshold and brake release frequency
2. Pre-brake release delay
3. Post-brake release delay
4. Wait for brake apply frequency
5. Wait for zero frequency
6. 1s delay as phase 2 of stopping sequence (Stop Mode Pr **00.031** = 1, 2 or 3)

• Dedicated brake diagram

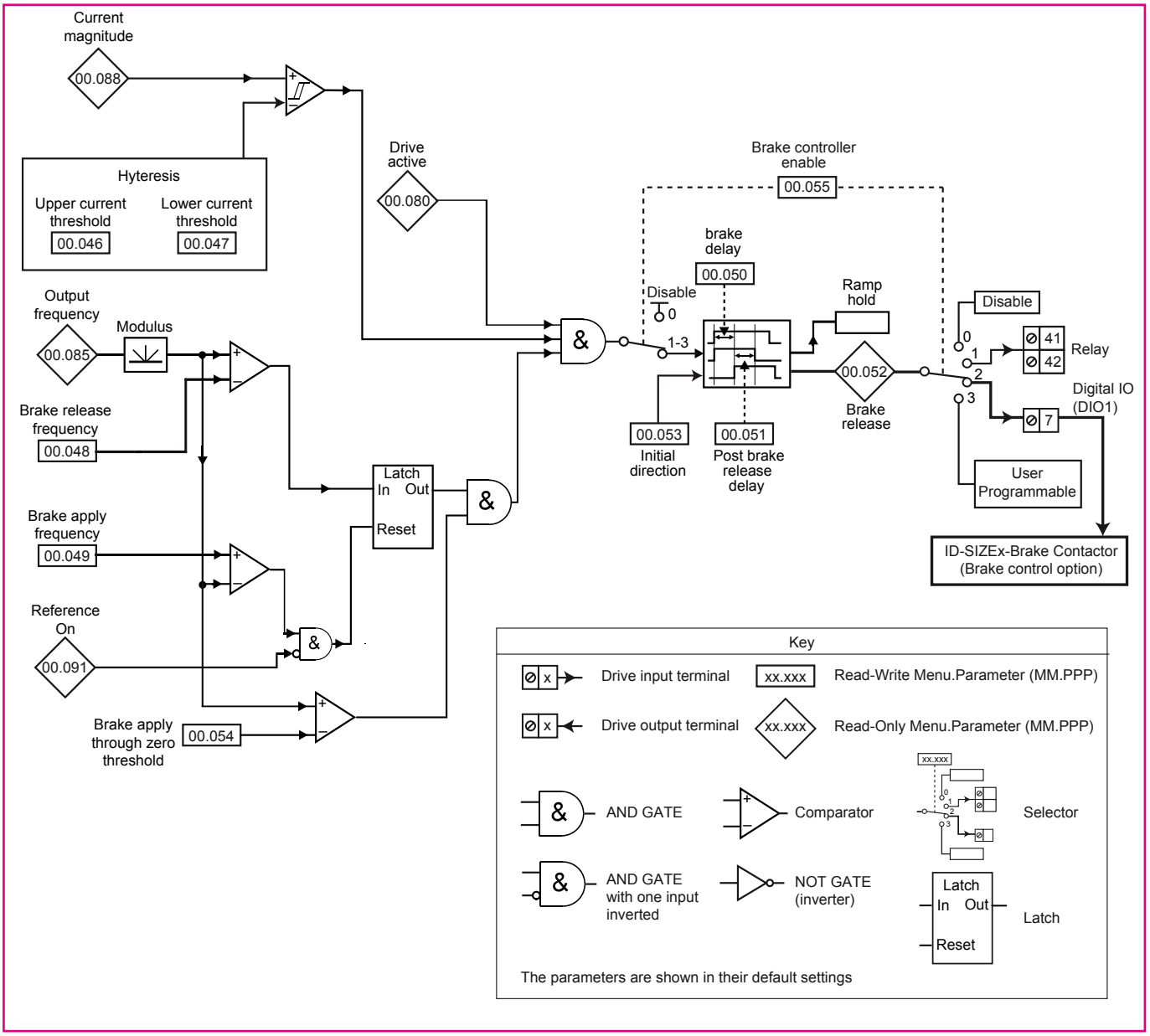

• The brake control functions are provided to allow well co-ordinated operation of the motor brake with the drive. While both hardware and software are designed to high standards of quality and robustness, they are not intended for use as safety functions, i.e. where a fault or failure would result in a risk of injury. In any application where the incorrect operation of the brake release mechanism could result in injury, independent protection devices of proven integrity must also be incorporated.

• The control terminal relay can be selected as an output to release the brake. If a drive is set up in this manner and a drive replacement takes place or after restoring parameter defaults, prior to programming the drive on initial power up, the brake may be released.

For brake control parameter explanations, please refer to Pr **00.046** to **00.055,** *page 26.*

• FOR A QUICK COMMISSIONING (FROM DEFAULT SETTINGS)

- Make the required control connections as indicated above.
- During parameter setting, the drive must be disabled (terminal 8 or terminals 31 and 34 are open).
- Power up the drive.
- If required set the maximum frequency Pr **00.002** (Hz), minimum frequency Pr **00.001** (Hz), acceleration rate Pr **00.003** (s/100 Hz) and deceleration rate Pr **00.004** (s/100Hz)
- Adjust the brake controller by setting Pr **00.046** to Pr **00.055**. See *page 26* for parameter explanation.
- Close the Enable terminal 8 or the STO terminals 31 & 34.
- Give a Run Forward or Run Reverse command by closing either terminal 9 or 10, or press the relevant button from the flange option.
- Adjust the frequency reference by tuning the potentiometer until the correct speed reference is reached.
- Stopping the motor: open terminal 9 or 10 to stop the motor under ramp control or remove the Enable signal by opening terminal 8 or 31 & 34 and the motor will coast to a stop. With the flange option, press the Stop button.

NOTE

- Brake control output connection on DIO1 is already made at factory.
- If you do not need brake control, the function can be disabled by setting Pr **00.055** to "Disable".
-

• Parameter explanation

00.011 (07.007)	**ADI1 Mode**			
Read-Write	↕	See table below	→	Voltage

The table below gives all the possible input modes.

Value	Mode	Function
-6	4-20mA Stop	4-20mA or 20-4 mA signal with stop on current loss [(1)]
-5	20-4mA Stop	
-4	4-20mA Low	4-20mA or 20-4 mA signal with switching to equivalent of 4mA input current on current loss [(1)]
-3	20-4mA Low	
-2	4-20mA Hold	4-20mA or 20-4 mA signal with hold at level before loss on current loss [(1)]
-1	20-4mA Hold	
0	0-20mA	0-20mA or 20-0mA signal
1	20-0mA	
2	4-20mA Trp	4-20mA or 20-4 mA signal with 'An Input 1 or 2 Loss' trip on current loss [(1)]
3	20-4mA Trp	
4	4-20mA	4-20mA or 20-4 mA signal with no action on current loss [(1)]
5	20-4mA	
6	Voltage	Voltage signal
7	Digital	Digital

[(1)] Current loss: the current is below 3mA.

00.012 and 00.013	**Not used**

00.014 (07.045)	**ADI2 Thermistor Mode**			
Read-Write	↕	An/Dig Input(0), Therm Short Cct(1), Thermistor(2), Therm No Trip(3)	→	Digital Input(0)

This parameter defines ADI2 mode which can be a digital input or a temperature measurement of a thermistor. The thermistor can be connected between ADI2 and 0V. By default, the thermistor type is a PTC (DIN44081). If another thermistor is used, refer to Pr **07.046** in the Parameter Reference Guide (www.commanderID300.info).

Value	Mode	Function
0	An/Dig Input	Digital input
1	Therm Short Cct	Temperature measurement input with short circuit detection (Resistance <50 Ω) with 'Th Short Circuit' trip
2	Thermistor	Temperature measurement input without short circuit detection but with 'Thermistor' trip
3	Therm No Trip	Temperature measurement input with no trip

00.015 (07.047)	**Thermistor Feedback**			
Read-Only	↕	0 to 4000 Ω	→	-

This parameter shows the measured resistance of the thermistor connected to ADI2 (if the thermistor connected and set correctly, see Pr **00.014** for more details).

00.016 (07.008)	**ADI1 Scaling**			
Read-Write	↕	0 to 10.000	→	1.000

These parameters are used, if necessary, to scale the analog inputs. However, this rarely proves necessary since the maximum input level (100%) automatically corresponds to the maximum value of the destination parameter. Pr **00.016** has no effect if ADI1 Mode (**00.011**) = Digital.

00.017 and 00.018	**Not used**

00.019 (07.009)	**ADI1 Invert**			
00.020 (07.013)	**ADI2 Invert**			
00.021 (08.011)	**DIO1 Invert**			
Read-Write	↕	0 or 1	→	0

These parameters are used, if necessary, to invert the input or output signal.

00.022 (08.001)	**DIO1 Output State**			
Read-Only	↕	0 or 1	→	-

Displays the state for DIO1 which is pre-configured as a digital output (terminal 7).

00.023 (07.014)	ADI2 Destination			
Read-Write	↕	0.000 to 30.999	→	0.000

Defines the output parameter (destination) for ADI2 which is pre-configured as a digital input (terminal 4).

As an example, find below parameters that could be set in Pr **00.023** if required.

Pr	Description
10.032	External trip
10.033	Drive reset

NOTE

By default, no destination parameter is assigned.

If Pr **00.014** is set to 'Therm Short Cct', 'Thermistor' or 'Therm No Trip', the ADI2 function is forced to be a thermistor input. Thus the setting of Pr **00.023** is not active. To be able to use Pr **00.023,** Pr **00.014** should be set to 'An/Dig input'.

00.024 (07.020)	ADIO3 Output Scaling			
Read-Write	↕	0.000 to 40.000	→	1.000

This parameter is used, if necessary, to scale the analog output. However, this rarely proves necessary since the maximum output level (100%) automatically corresponds to the maximum value of the source parameter.

CAUTION

Pr 00.024 should remain at 1.000 if Pr 00.025 Output Control is set to 16 (LED management).

00.025 (07.057)	ADIO3 Output Control			
Read-Write	↕	0 to 16	→	16

This parameter offers a simple way to change the source function of the ADIO3 output.

• If Pr 00.025 = 0 to 15

Value	ADIO3 Source	Description
0	**00.000**	User defined by Pr **00.027** (no LED management). No source assigned by default
1	**02.001**	Post Ramp frequency reference
2	**00.082**	Pre Ramp frequency reference
3	**00.087**	Motor rpm
4	**00.088**	Current Magnitude
5	**-**	Reserved
6	**04.020**	Percentage load. Gives Pr **00.089(04.002)** Torque Producing Current as a percentage.
7	**00.089**	Torque producing current
8	**00.086**	Voltage output
9	**00.084**	DC bus voltage
10	**00.094**	Analogue Input 1
11	**00.095**	Analogue Input 2
12	**05.003**	Power output
13	**04.018**	Current limit
14	**04.008**	Torque reference
15	**-**	Reserved

• If Pr 00.025 = 16

ADIO3 is used to control the illumination of the 3 LED's on flange option if fitted.

The **Red LED** is illuminated if the drive is in a trip state, flashes if the drive is running with an alarm condition, and is off if the drive is healthy and not in an alarm condition.

The **Green LED** is illuminated if the input supply is healthy, flashes if the input supply is healthy and the drive output is active, and is off if the incoming supply is not healthy.

The **Yellow LED** is user defined and can be used to indicate any parameter by setting Pr **00.027**.

To know the output voltage value for the defined LED states, please see Pr **00.029**.

For more information about LED management, refer to *section 3.5, page 12*.

00.026 (08.022)	DI2 Destination			
Read-Write	↕	0.000 to 30.999	→	• ID300: 06.038 • ID302: 0.000

This parameter defines the input (destination) parameter for digital input 2.

As an example, find below parameters that could be set in Pr **00.026** if required.

Pr	Description
10.032	External trip
10.033	Drive reset

NOTE

For the Commander ID300, this input is assigned to the user enable function (Pr **06.038**) by default , and is not assigned for Commander ID302.

00.027 (07.019)	ADIO3 Yellow LED Source			
Read-Write	↕	0.000 to 30.999	→	0.000

This parameter defines the output (source) parameter that activates yellow LED.

As an example, find below parameters that could be set in Pr **00.027** if required.

Pr	Description
06.029	Hardware enable
10.003	Zero frequency
10.006	At frequency
10.009	Current limit active

00.028 (08.024)	DI4 Destination			
Read-Write	↕	0.000 to 30.999	→	06.032

This parameter defines the input (destination) parameter for digital input 4.

As an example, find below parameters that could be set in Pr **00.028** if required.

Pr	Description
10.032	External trip
10.033	Drive reset

NOTE

By default, this input is assigned to the Run Reverse function (Pr **06.032**). If necessary, it can be disabled by setting Pr **00.028** to 0.000.

00.029 (07.003)	ADIO3 Output State			
Read-Only	↕	± 100.00 %	→	-

ADIO3 is used to control the illumination of the 3 LED's on flange option if fitted (Red, Green and Yellow LEDs). Pr **00.029** displays the level of the analog signal.

NOTE

By default, Yellow LED is not active. See Pr **00.027** if required.

For more information about LED management, refer to *section 3.5, page 12*.

5.6.3 - 3PS/1Ana brake: Voltage frequency reference (ADI1) or 3 preset references selected by terminals (with Brake option)

• Application examples
Overhead crane (preset references for automatic mode and analog reference for manual mode).

• Control connections required

3PS-1Ana brake (default)

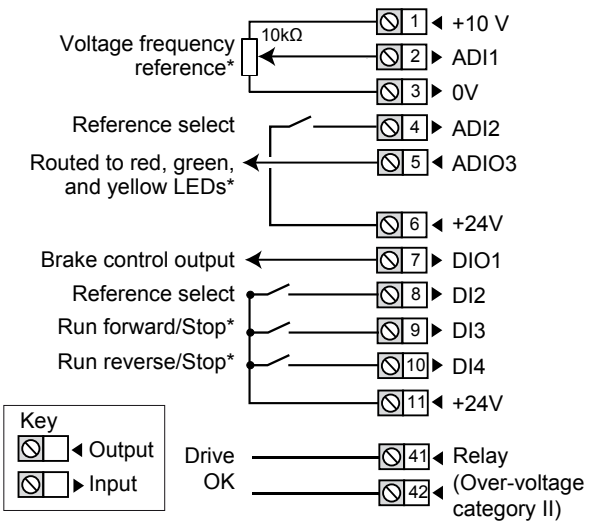

This configuration is more dedicated to ID302 with STO inputs. With ID300, you can manage drive enable parameter Pr 06.038 by using a keypad option or Connect software.

*** Some connections are not necessary in the following cases:**

- If there is a local potentiometer (side flange options), ADI1 is already connected.
- If there are LEDs on side flange option, ADIO3 is already connected to them but yellow LED has no function by default. If needed, user defined functions can be set with Pr **00.027** (see *section 3.5, page 12*).
- If there are local command buttons (side flange option), DI3 and DI4 are already connected.
- For STO connection details, see *section 3.2, page 11*.

• Parameter list dedicated to this configuration

Parameter		Function	Range	Default value
Menu 0	Adv. menu			
00.011	07.007	ADI1 Mode	4-20mA Stop(-6), 20-4mA Stop (-5), 4-20mA Low (-4), 20-4mA Low (-3), 4-20mA Hold (-2), 20-4mA Hold (-1), 0-20mA (0), 20-0mA (1), 4-20mA Trp (2), 20-4mA Trp (3), 4-20mA (4), 20-4mA (5), Voltage (6), Digital (7)	Voltage (6)
00.012	01.022	Preset ref. 2	± VM_SPEED_FREQ_REF Hz	0.00 Hz
00.013	01.023	Preset ref. 3		
00.014	01.024	Preset ref. 4		
00.015	-	Not used		
00.016	07.008	ADI1 Scaling	0 to 10.000	1.000
00.017	08.002	DI2 Input State	0 or 1	-
00.018	08.012	DI2 Invert	0 or 1	0
00.019	07.009	ADI1 Invert	0 or 1	0
00.020	07.013	ADI2 Invert	0 or 1	0
00.021	08.011	DIO1 Invert	0 or 1	0
00.022	08.001	DIO1 Output state	0 or 1	-
00.023	-	Not used		
00.024	07.020	ADIO3 Output scaling	0.000 to 40.000	1.000
00.025	07.057	ADIO3 Output Control	0 to 16	16
00.026	-	Not used		
00.027	07.019	ADIO3 Yellow LED source	0.000 to 30.999	0.000
00.028	08.024	DI4 Destination	0.000 to 30.999	**06.032**
00.029	07.003	ADIO3 Output State	± 100.00 %	-

• **Parameter diagram for more advanced commissioning**

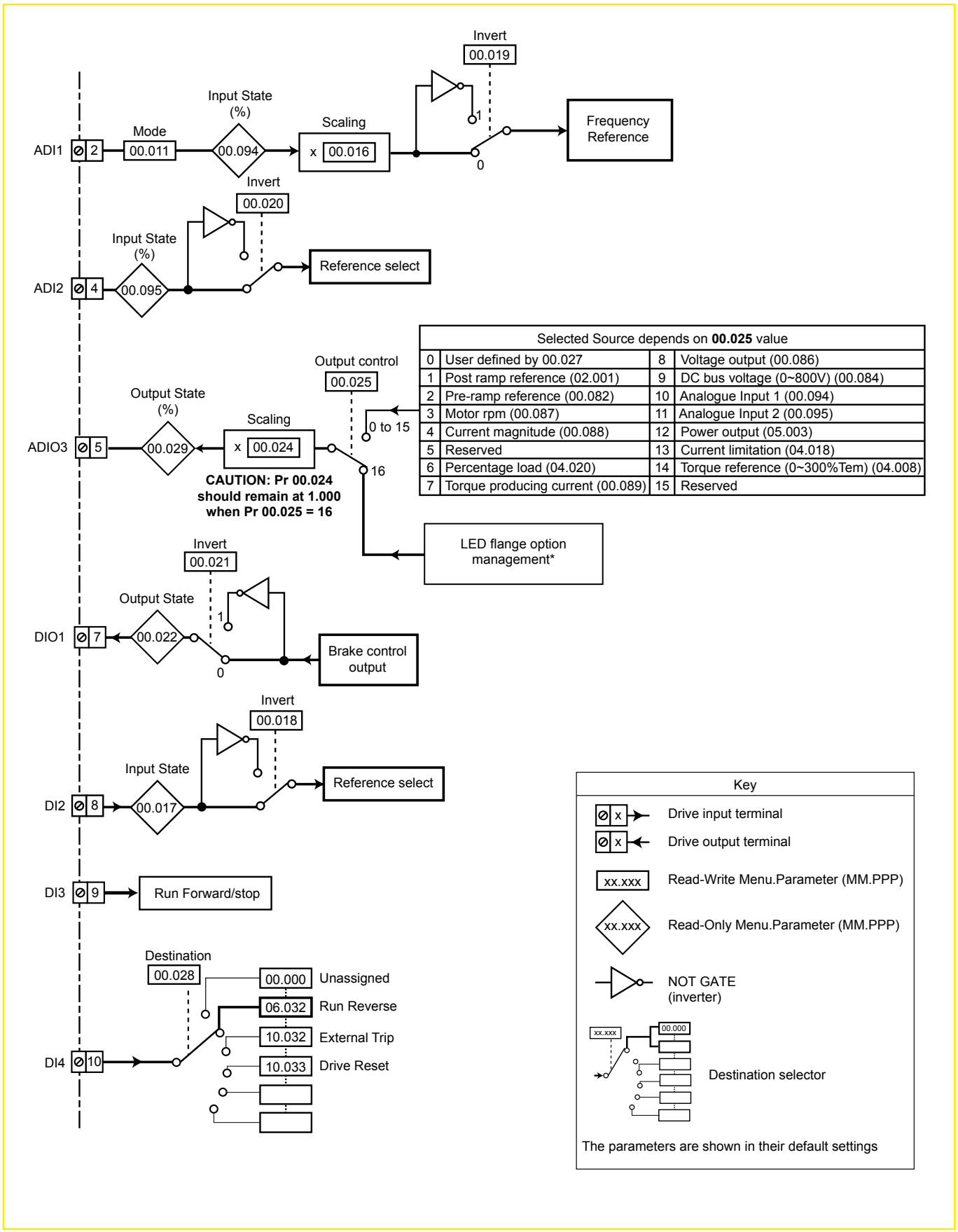

Selected Source depends on **00.025** value			
0	User defined by 00.027	8	Voltage output (00.086)
1	Post ramp reference (02.001)	9	DC bus voltage (0~800V) (00.084)
2	Pre-ramp reference (00.082)	10	Analogue Input 1 (00.094)
3	Motor rpm (00.087)	11	Analogue Input 2 (00.095)
4	Current magnitude (00.088)	12	Power output (05.003)
5	Reserved	13	Current limitation (04.018)
6	Percentage load (04.020)	14	Torque reference (0~300%Tem) (04.008)
7	Torque producing current (00.089)	15	Reserved

* See *section 3.5, page 12* for details.

• Dedicated brake parameters

Parameter		Function	Range	Default value
Menu 0	**Adv. menu**			
00.046	12.042	Upper Current Threshold	0 to 200 %	50 %
00.047	12.043	Lower Current Threshold	0 to 200 %	10 %
00.048	12.044	Brake Release Frequency	0.00 to 20.00 Hz	1.00 Hz
00.049	12.045	Brake Apply Frequency	0.00 to 20.00 Hz	2.00 Hz
00.050	12.046	Brake Release Delay	0.0 to 25.0 s	1.0 s
00.051	12.047	Post-brake Release Delay	0.0 to 25.0 s	1.0 s
00.052	12.040	Brake release	0 or 1	-
00.053	12.050	Initial Direction	Ref(0), Forward(1), Reverse(2)	Ref(0)
00.054	12.051	Brake Apply Through Zero Threshold	0.00 to 20.00 Hz	1.00 Hz
00.055	12.041	Brake Controller Enable	Disable(0), Relay(1), Digital IO(2), User(3)	Digital IO(2)

• Brake control operation

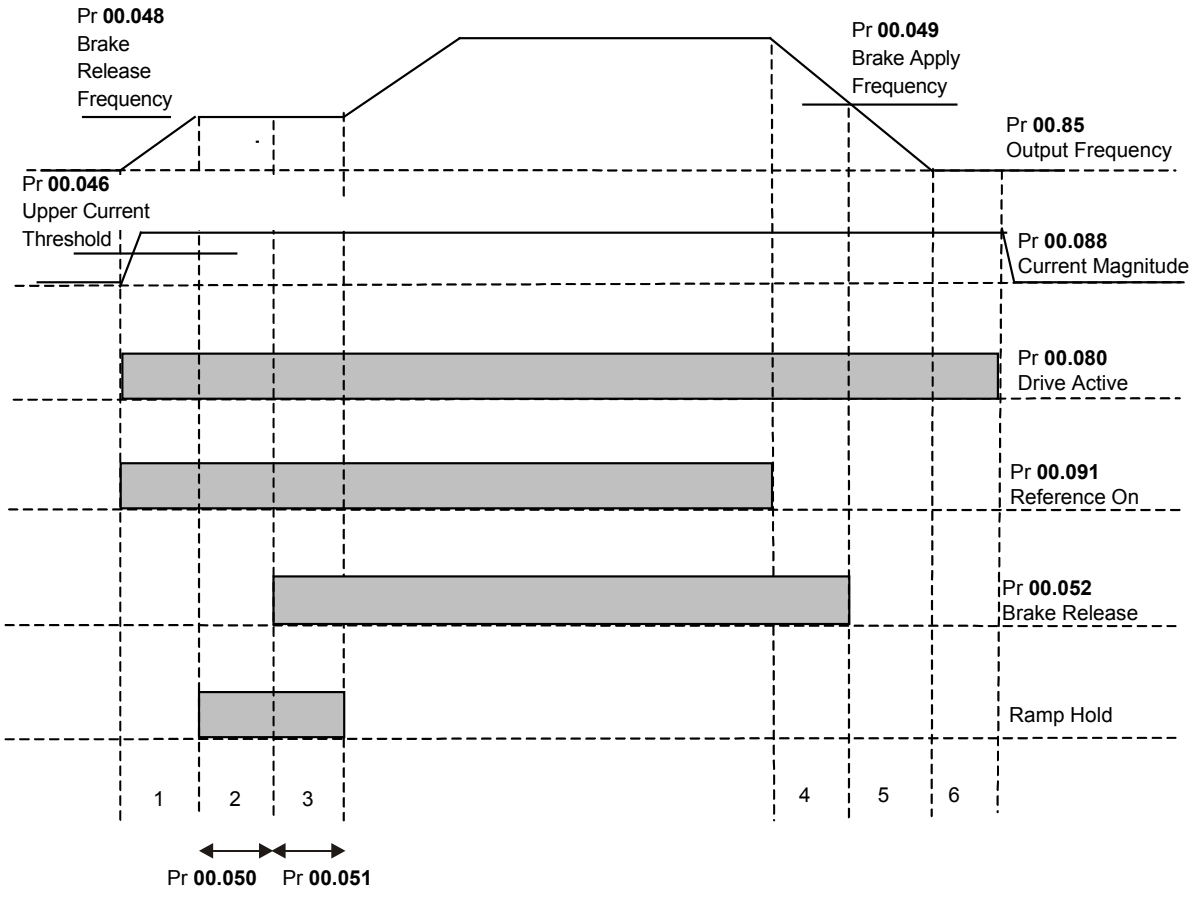

1. Wait for upper current threshold and brake release frequency
2. Pre-brake release delay
3. Post-brake release delay
4. Wait for brake apply frequency
5. Wait for zero frequency
6. 1s delay as phase 2 of stopping sequence (Stop Mode Pr **00.031** = 1, 2 or 3)

• Brake Control Logic diagram

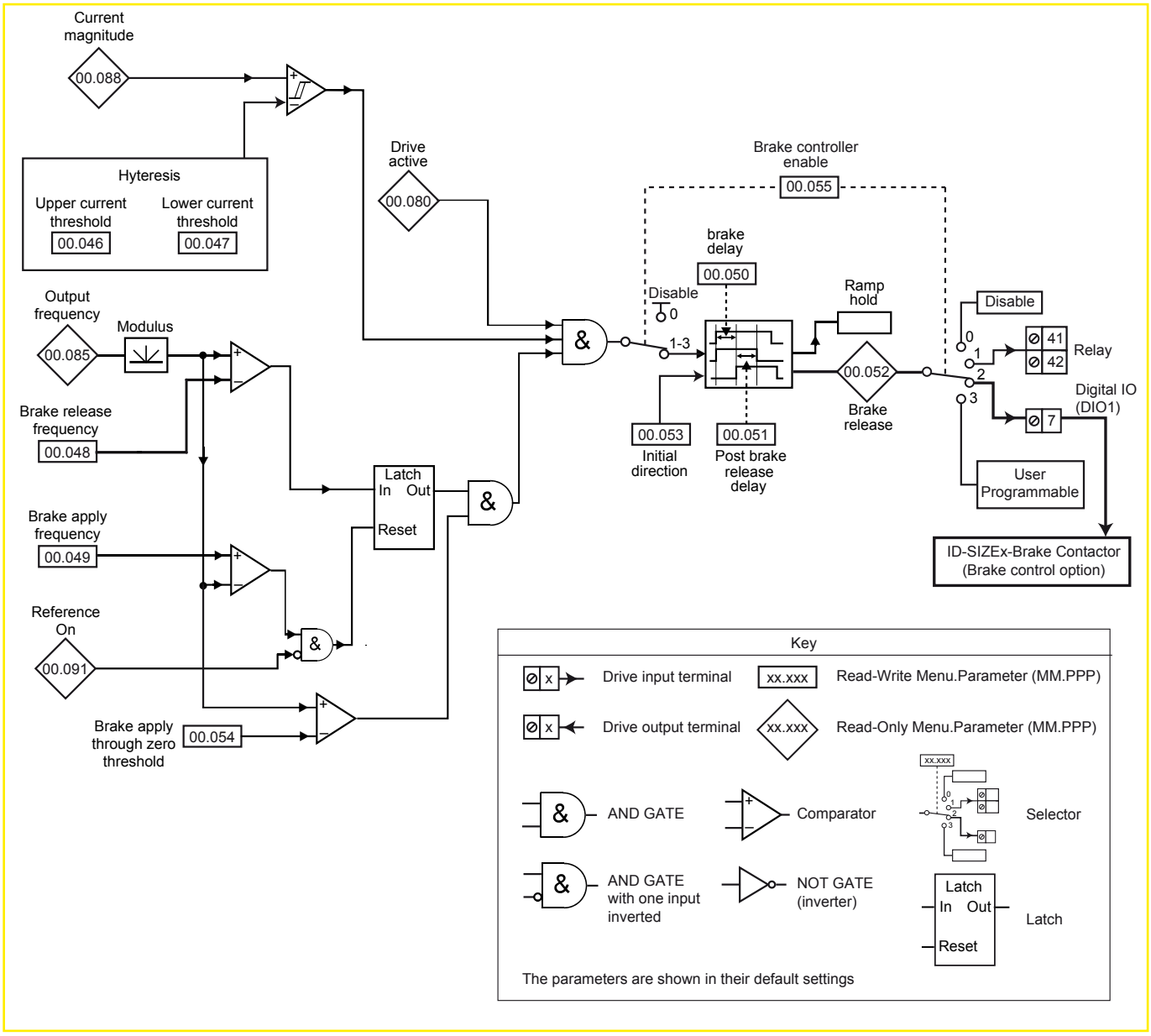

• The brake control functions are provided to allow well co-ordinated operation of the motor brake with the drive. While both hardware and software are designed to high standards of quality and robustness, they are not intended for use as safety functions, i.e. where a fault or failure would result in a risk of injury. In any application where the incorrect operation of the brake release mechanism could result in injury, independent protection devices of proven integrity must also be incorporated.

• The control terminal relay can be selected as an output to release the brake. If a drive is set up in this manner and a drive replacement takes place or after restoring parameter defaults, prior to programming the drive on initial power up, the brake may be released.

For brake control parameter explanations, please refer to Pr **00.046** to **00.055,** *page 26.*

• FOR A QUICK COMMISSIONING (FROM DEFAULT SETTINGS)

- Make the required control connections as indicated above.
- During parameter setting, the drive must be disabled (terminals 31 and 34 are open)
- Power up the drive
- If required set the maximum frequency Pr **00.002** (Hz), minimum frequency Pr **00.001** (Hz), acceleration rate Pr **00.003** (s/100 Hz) and deceleration rate Pr **00.004** (s/100Hz)
- Set the correct preset references 2, 3 and 4 in Pr **00.012**, Pr **00.013** and Pr **00.014**.
- Adjust the brake controller by setting Pr **00.046** to Pr **00.055**. See *page 26* for parameter explanation.
- The reference selection will be as follows:

ADI2	DI2	Selected reference
Open	Open	Frequency reference on ADI1 (0-10V)
Open	Closed	Preset reference 2
Closed	Open	Preset reference 3
Closed	Closed	Preset reference 4

- Close the STO terminals 31 & 34 .
- Select the required frequency reference by opening/closing ADI2 and DI2 terminals.
- Give a Run Forward or Run Reverse command by closing either terminal 9 or 10, or press the relevant button from the flange option.
- Stopping the motor: open terminal 9 or 10 to stop the motor under ramp control or remove the Enable signal by opening terminal 8 or 31 & 34 and the motor will coast to a stop. With the flange option, press the Stop button.

NOTE

- Brake control output connection on DIO1 is already made at factory. If you do not need brake control, the function can be disabled by setting Pr **00.055** to "Disable".

• Parameter explanation

00.011 (07.007)	ADI1 Mode			
Read-Write	↕	See table below	→	Voltage

The table below gives all the possible input modes.

Value	Mode	Function
-6	4-20mA Stop	4-20mA or 20-4 mA signal with stop on current loss (1)
-5	20-4mA Stop	
-4	4-20mA Low	4-20mA or 20-4 mA signal with switching to equivalent of 4mA input current on current loss (1)
-3	20-4mA Low	
-2	4-20mA Hold	4-20mA or 20-4 mA signal with hold at level before loss on current loss (1)
-1	20-4mA Hold	
0	0-20mA	0-20mA or 20-0mA signal
1	20-0mA	
2	4-20mA Trp	4-20mA or 20-4 mA signal with 'An Input 1 or 2 Loss' trip on current loss (1)
3	20-4mA Trp	
4	4-20mA	4-20mA or 20-4 mA signal with no action on current loss (1)
5	20-4mA	
6	Voltage	Voltage signal
7	Digital	Digital

(1) Current loss: the current is below 3mA.

00.012 (01.022)	Preset Reference 2			
00.013 (01.023)	Preset Reference 3			
00.014 (01.024)	Preset Reference 4			
Read-Write	↕	± VM_SPEED_FREQ_REF (Hz)	→	0.00 Hz

These parameters define the value for preset references 2 to 4.

00.015	Not used

00.016 (07.008)	ADI1 Scaling			
Read-Write	↕	0 to 10.000	→	1.000

This parameter is used, if necessary, to scale the analog input. However, this rarely proves necessary since the maximum input level (100%) automatically corresponds to the maximum value of the destination parameter. Pr **00.016** has no effect if ADI1 Mode (**00.011**) = Digital.

00.017 (08.002)	DI2 Input State			
Read-Only	↕	0 or 1	→	-

Displays the state for digital input 2.

00.018 (08.012)	DI2 Invert			
00.019 (07.009)	ADI1 Invert			
00.020 (07.013)	ADI2 Invert			
00.021 (08.011)	DIO1 Invert			
Read-Write	↕	0 or 1	→	0

These parameters are used, if necessary, to invert the input or output signal.

00.022 (08.001)	DIO1 Output State			
Read-Only	↕	0 or 1	→	-

Displays the state for DIO1 which is pre-configured as a digital output.

00.023	Not used

00.024 (07.020)	ADIO3 Output Scaling			
Read-Write	↕	0.000 to 40.000	→	1.000

This parameter is used, if necessary, to scale the analog output. However, this rarely proves necessary since the maximum output level (100%) automatically corresponds to the maximum value of the source parameter.

CAUTION

Pr 00.024 should remain at 1.000 if Pr 00.025 Output Control is set to 16 (LED management).

00.025 (07.057)	ADIO3 Output Control			
Read-Write	↕	0 to 16	→	16

This parameter offers a simple way to change the source function of the ADIO3 output.

• If Pr 00.025 = 0 to 15

Value	ADIO3 Source	Description
0	**00.000**	User defined by Pr **00.027** (no LED management). No source assigned by default
1	**02.001**	Post Ramp frequency reference
2	**00.082**	Pre Ramp frequency reference
3	**00.087**	Motor rpm
4	**00.088**	Current Magnitude
5	**-**	Reserved
6	**04.020**	Percentage load. Gives Pr **00.089(04.002)** Torque Producing Current as a percentage.
7	**00.089**	Torque producing current
8	**00.086**	Voltage output
9	**00.084**	DC bus voltage
10	**00.094**	Analogue Input 1
11	**00.095**	Analogue Input 2
12	**05.003**	Power output
13	**04.018**	Current limit
14	**04.008**	Torque reference
15	**-**	Reserved

• If Pr 00.025 = 16

ADIO3 is used to control the illumination of the 3 LED's on flange option if fitted.

The **Red LED** is illuminated if the drive is in a trip state, flashes if the drive is running with an alarm condition, and is off if the drive is healthy and not in an alarm condition.

The **Green LED** is illuminated if the input supply is healthy, flashes if the input supply is healthy and the drive output is active, and is off if the incoming supply is not healthy.

The **Yellow LED** is user defined and can be used to indicate any parameter by setting Pr **00.027**.

To know the output voltage value for the defined LED states, please see Pr **00.029**.

For more information about LED management, refer to *section 3.5, page 12*.

00.026	Not used

00.027 (07.019)	ADIO3 Yellow LED Source			
Read-Write	↕	0.000 to 30.999	→	0.000

This parameter defines the output (source) parameter that activates yellow LED.

As an example, find below parameters that could be set in Pr **00.027** if required.

Pr	Description
06.029	Hardware enable
10.003	Zero frequency
10.006	At frequency
10.009	Current limit active

00.028 (08.024)	DI4 Destination			
Read-Write	↕	0.000 to 30.999	→	06.032

This parameter defines the input (destination) parameter for digital input 4.

As an example, find below parameters that could be set in Pr **00.028** if required.

Pr	Description
10.032	External trip
10.033	Drive reset

NOTE

By default, this input is assigned to the Run Reverse function (Pr **06.032**). If necessary it can be disabled by setting Pr **00.028** to 0.000.

00.029 (07.003)	ADIO3 Output State			
Read-Only	↕	± 100.00 %	→	-

ADIO3 is used to control the illumination of the 3 LED's on flange option if fitted (Red, Green and Yellow LEDs). Pr **00.029** displays the level of the analog signal.

NOTE

By default, Yellow LED is not active. See Pr **00.027** if required.

For more information about LED management, refer to *section 3.5, page 12*.

5.6.4 - 3PS/1Ana Nobrake: Voltage frequency reference (ADI1) or 3 preset references selected by terminals (without Brake Option)

• Application examples
Industrial washing machines.

• Control connections required

3PS-1Ana NoBrake (default)

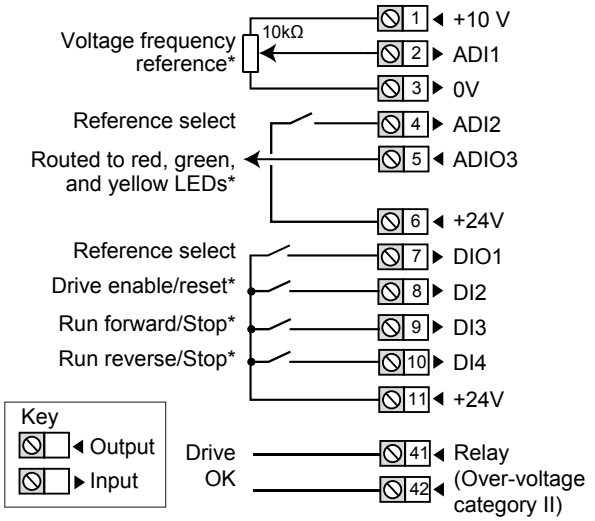

*** Some connections are not necessary in the following cases:**

- If there is a local potentiometer (side flange options), ADI1 is already connected.
- If there are LEDs on side flange option, ADIO3 is already connected to them but yellow LED has no function by default. If needed, user defined functions can be set with Pr **00.027** (see *section 3.5, page 12*).
- DI2 has no function assigned by default on Commander ID302. For STO connection details, see *section 3.2, page 11*.
- If there are local command buttons (side flange option), DI3 and DI4 are already connected.

• Parameter list dedicated to this configuration

Parameter		Function	Range	Default value
Menu 0	Adv. menu			
00.011	07.007	Analog/Digital Input 1 Mode (ADI1)	4-20mA Stop(-6), 20-4mA Stop (-5), 4-20mA Low (-4), 20-4mA Low (-3), 4-20mA Hold (-2), 20-4mA Hold (-1), 0-20mA (0), 20-0mA (1), 4-20mA Trp (2), 20-4mA Trp (3), 4-20mA (4), 20-4mA (5), Voltage (6), Digital (7)	Voltage (6)
00.012	01.022	Preset reference 2	± VM_SPEED_FREQ_REF Hz	0.00 Hz
00.013	01.023	Preset reference 3		
00.014	01.024	Preset reference 4		
00.015	-	Not used		
00.016	07.008	ADI1 Scaling	0.000 to 10.000	1.000
00.017	-	Not used		
00.018	-	Not used		
00.019	07.009	ADI1 Invert	0 or 1	0
00.020	07.013	ADI2 Invert	0 or 1	0
00.021	08.011	DIO1 Invert	0 or 1	0
00.022	08.001	DIO1 State	0 or 1	-
00.023	-	Not used		
00.024	07.020	ADIO3 scaling	0.000 to 40.000	1.000
00.025	07.057	ADIO3 Control	0 to 16	16
00.026	08.022	DI2 Destination	0.000 to 30.999	• ID300: **06.038** • ID302: 0.000
00.027	07.019	ADIO3 output source	0.000 to 30.999	0.000
00.028	08.024	DI4 Destination	0.000 to 30.999	**06.032**
00.029	07.003	ADIO3 State	± 100.00 %	-

• Parameter diagram for more advanced commissioning

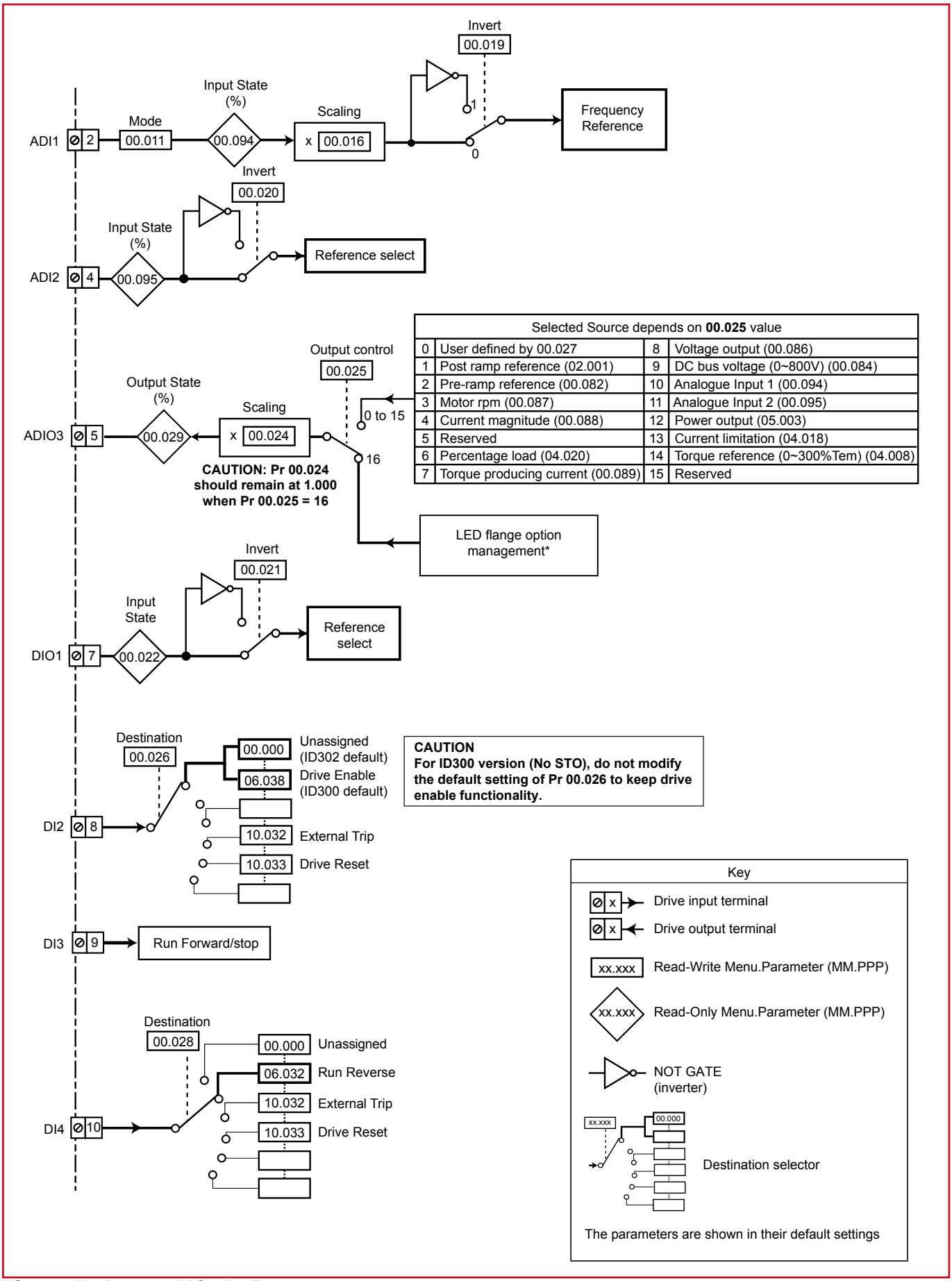

Selected Source depends on **00.025** value			
0	User defined by 00.027	8	Voltage output (00.086)
1	Post ramp reference (02.001)	9	DC bus voltage (0~800V) (00.084)
2	Pre-ramp reference (00.082)	10	Analogue Input 1 (00.094)
3	Motor rpm (00.087)	11	Analogue Input 2 (00.095)
4	Current magnitude (00.088)	12	Power output (05.003)
5	Reserved	13	Current limitation (04.018)
6	Percentage load (04.020)	14	Torque reference (0~300%Tem) (04.008)
7	Torque producing current (00.089)	15	Reserved

CAUTION
For ID300 version (No STO), do not modify the default setting of Pr 00.026 to keep drive enable functionality.

* See *section 3.5, page 12* for details.

• FOR A QUICK COMMISSIONING (FROM DEFAULT SETTINGS)

- Make the required control connections as indicated above.
- During parameter setting, the drive must be disabled (terminal 8 or terminals 31 and 34 are open)
- Power up the drive
- If required set the maximum frequency Pr **00.002** (Hz), minimum frequency Pr **00.001** (Hz), acceleration rate Pr **00.003** (s/100 Hz) and deceleration rate Pr **00.004** (s/100Hz)
- Set the correct preset references 2, 3 and 4 in Pr **00.012**, Pr **00.013** and Pr **00.014**.
- The reference selection will be as follows:

ADI2	DIO1	Selected reference
Open	Open	Frequency reference on ADI1 (0-10V)
Open	Closed	Preset reference 2
Closed	Open	Preset reference 3
Closed	Closed	Preset reference 4

- Close the Enable terminal 8 or the STO terminals 31 & 34
- Select the required frequency reference by opening/closing ADI2 and DIO1 terminals.
- Give a Run Forward or Run Reverse command by closing either terminal 9 or 10, or press the relevant button from the flange option.
- Stopping the motor: open terminal 9 or 10 to stop the motor under ramp control or remove the Enable signal by opening terminal 8 or 31 & 34 and the motor will coast to a stop. With the flange option, press the Stop button.

• Parameter explanation

00.011 (07.007)	ADI1 Mode			
Read-Write	↕	See table below	→	Voltage

The table below gives all the possible input modes.

Value	Mode	Function
-6	4-20mA Stop	4-20mA or 20-4 mA signal with stop on current loss (1)
-5	20-4mA Stop	
-4	4-20mA Low	4-20mA or 20-4 mA signal with switching to equivalent of 4mA input current on current loss (1)
-3	20-4mA Low	
-2	4-20mA Hold	4-20mA or 20-4 mA signal with hold at level before loss on current loss (1)
-1	20-4mA Hold	
0	0-20mA	0-20mA or 20-0mA signal
1	20-0mA	
2	4-20mA Trp	4-20mA or 20-4 mA signal with 'An Input 1 or 2 Loss' trip on current loss (1)
3	20-4mA Trp	
4	4-20mA	4-20mA or 20-4 mA signal with no action on current loss (1)
5	20-4mA	
6	Voltage	Voltage signal
7	Digital	Digital

(1) Current loss: the current is below 3mA.

00.012 (01.022)	Preset Reference 2			
00.013 (01.023)	Preset Reference 3			
00.014 (01.024)	Preset Reference 4			
Read-Write	↕	± VM_SPEED_FREQ_REF (Hz)	→	0.00 Hz

These parameters define the value for preset references 2 to 4.

00.015	Not used

00.016 (07.008)	ADI1 Scaling			
Read-Write	↕	0 to 10.000	→	1.000

This parameter is used, if necessary, to scale the analog input. However, this rarely proves necessary since the maximum input level (100%) automatically corresponds to the maximum value of the destination parameter. Pr **00.016** has no effect if ADI1 Mode (**00.011**) = Digital.

00.017 and 00.018	Not used

00.019 (07.009)	ADI1 Invert			
00.020 (07.013)	ADI2 Invert			
00.021 (08.011)	DIO1 Invert			
Read-Write	↕	0 or 1	→	0

These parameters are used, if necessary, to invert the input or output signal.

00.022 (08.001)	DIO1 Input State			
Read-Only	↕	0 or 1	→	-

Displays the state for DIO1 which is pre-configured as a digital input.

00.023	Not used

00.024 (07.020)	ADIO3 Output Scaling			
Read-Write	↕	0.000 to 40.000	→	1.000

This parameter is used, if necessary, to scale the analog output. However, this rarely proves necessary since the maximum output level (100%) automatically corresponds to the maximum value of the source parameter.

CAUTION

Pr 00.024 should remain at 1.000 if Pr 00.025 Output Control is set to 16 (LED management).

00.025 (07.057)	ADIO3 Output Control			
Read-Write	↕	0 to 16	→	16

This parameter offers a simple way to change the source function of the ADIO3 output.

• If Pr 00.025 = 0 to 15

Value	ADIO3 Source	Description
0	**00.000**	User defined by Pr **00.027** (no LED management). No source assigned by default
1	**02.001**	Post Ramp frequency reference
2	**00.082**	Pre Ramp frequency reference
3	**00.087**	Motor rpm
4	**00.088**	Current Magnitude
5	**-**	Reserved
6	**04.020**	Percentage load. Gives Pr **00.089(04.002)** Torque Producing Current as a percentage.
7	**00.089**	Torque producing current
8	**00.086**	Voltage output
9	**00.084**	DC bus voltage
10	**00.094**	Analogue Input 1
11	**00.095**	Analogue Input 2
12	**05.003**	Power output
13	**04.018**	Current limit
14	**04.008**	Torque reference
15	**-**	Reserved

• If Pr 00.025 = 16

ADIO3 is used to control the illumination of the 3 LED's on flange option if fitted.

The **Red LED** is illuminated if the drive is in a trip state, flashes if the drive is running with an alarm condition, and is off if the drive is healthy and not in an alarm condition.

The **Green LED** is illuminated if the input supply is healthy, flashes if the input supply is healthy and the drive output is active, and is off if the incoming supply is not healthy.

The **Yellow LED** is user defined and can be used to indicate any parameter by setting Pr **00.027**.

To know the output voltage value for the defined LED states, please see Pr **00.029**.

For more information about LED management, refer to *section 3.5, page 12*.

00.026 (08.022)	DI2 Destination			
Read-Write	↕	0.000 to 30.999	→	• ID300: 06.038 • ID302: 0.000

This parameter defines the input (destination) parameter for digital input 2.

As an example, find below parameters that could be set in Pr **00.026** if required.

Pr	Description
10.032	External trip
10.033	Drive reset

NOTE

For the Commander ID300, this input is assigned to the user enable function (Pr **06.038**) by default , and is not assigned for Commander ID302.

00.027 (07.019)	ADIO3 Yellow LED Source			
Read-Write	↕	0.000 to 30.999	→	0.000

This parameter defines the output (source) parameter that activates yellow LED.

As an example, find below parameters that could be set in Pr **00.027** if required.

Pr	Description
06.029	Hardware enable
10.003	Zero frequency
10.006	At frequency
10.009	Current limit active

00.028 (08.024)	DI4 Destination			
Read-Write	↕	0.000 to 30.999	→	06.032

This parameter defines the input (destination) parameter for digital input 4.

As an example, find below parameters that could be set in Pr **00.028** if required.

Pr	Description
10.032	External trip
10.033	Drive reset

NOTE

By default, this input is assigned to the Run Reverse function (Pr **06.032**). If necessary it can be disabled by setting Pr **00.028** to 0.000.

00.029 (07.003)	ADIO3 Output State			
Read-Only	↕	± 100.00 %	→	-

ADIO3 is used to control the illumination of the 3 LED's on flange option if fitted (Red, Green and Yellow LEDs). Pr **00.029** displays the level of the analog signal.

NOTE

By default, Yellow LED is not active. See Pr **00.027** if required.
For more information about LED management, refer to *section 3.5, page 12*.

5.6.5 - 8 presets: Eight preset references selected by terminals

• Application examples
Mixers (bakery machines).

• Control connections required

8 presets (default)

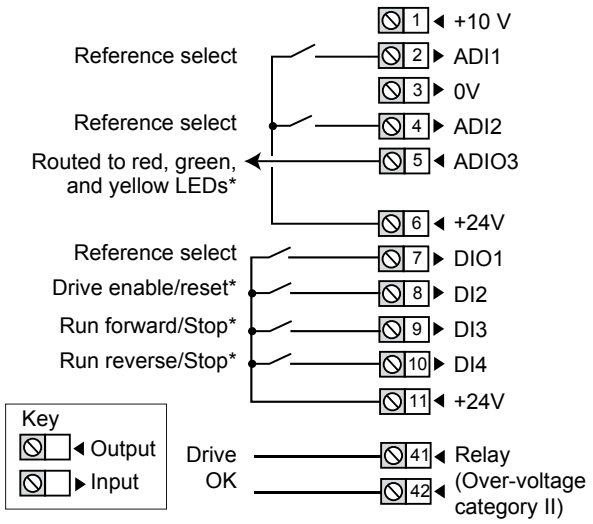

*** Some connections are not necessary in the following cases:**

- If there are LEDs on side flange option, ADIO3 is already connected to them but yellow LED has no function by default. If needed, user defined functions can be set with Pr **00.027** (see *section 3.5, page 12*).
- DI2 has no function assigned by default on Commander ID302. For STO connection details, see *section 3.2, page 11*.
- If there are local command buttons (side flange option), DI3 and DI4 are already connected.

• Parameter list dedicated to this configuration

Parameter		Function	Range	Default value
Menu 0	**Adv. menu**			
00.011	01.021	Preset reference 1	± VM_ SPEED_ FREQ_REF Hz	0.00 Hz
00.012	01.022	Preset reference 2		
00.013	01.023	Preset reference 3		
00.014	01.024	Preset reference 4		
00.015	01.025	Preset reference 5		
00.016	01.026	Preset reference 6		
00.017	01.027	Preset reference 7		
00.018	01.028	Preset reference 8		
00.019	07.009	ADI1 Invert	0 or 1	0
00.020	07.013	ADI2 Invert	0 or 1	0
00.021	08.011	DIO1 Invert	0 or 1	0
00.022	08.001	DIO1 Input State	0 or 1	**-**
00.023	-	Not used		
00.024	07.020	ADIO3 Output scaling	0.000 to 40.000	1.000
00.025	07.057	ADIO3 Output Control	0 to 16	16
00.026	08.022	DI2 Destination	0.000 to 30.999	• ID300: **06.038** • ID302: 0.000
00.027	07.019	ADIO3 Yellow LED source	0.000 to 30.999	0.000
00.028	08.024	DI4 Destination	0.000 à 30.999	**06.032**
00.029	07.003	ADIO3 Output State	± 100.00 %	-

• Parameter diagram for more advanced commissioning

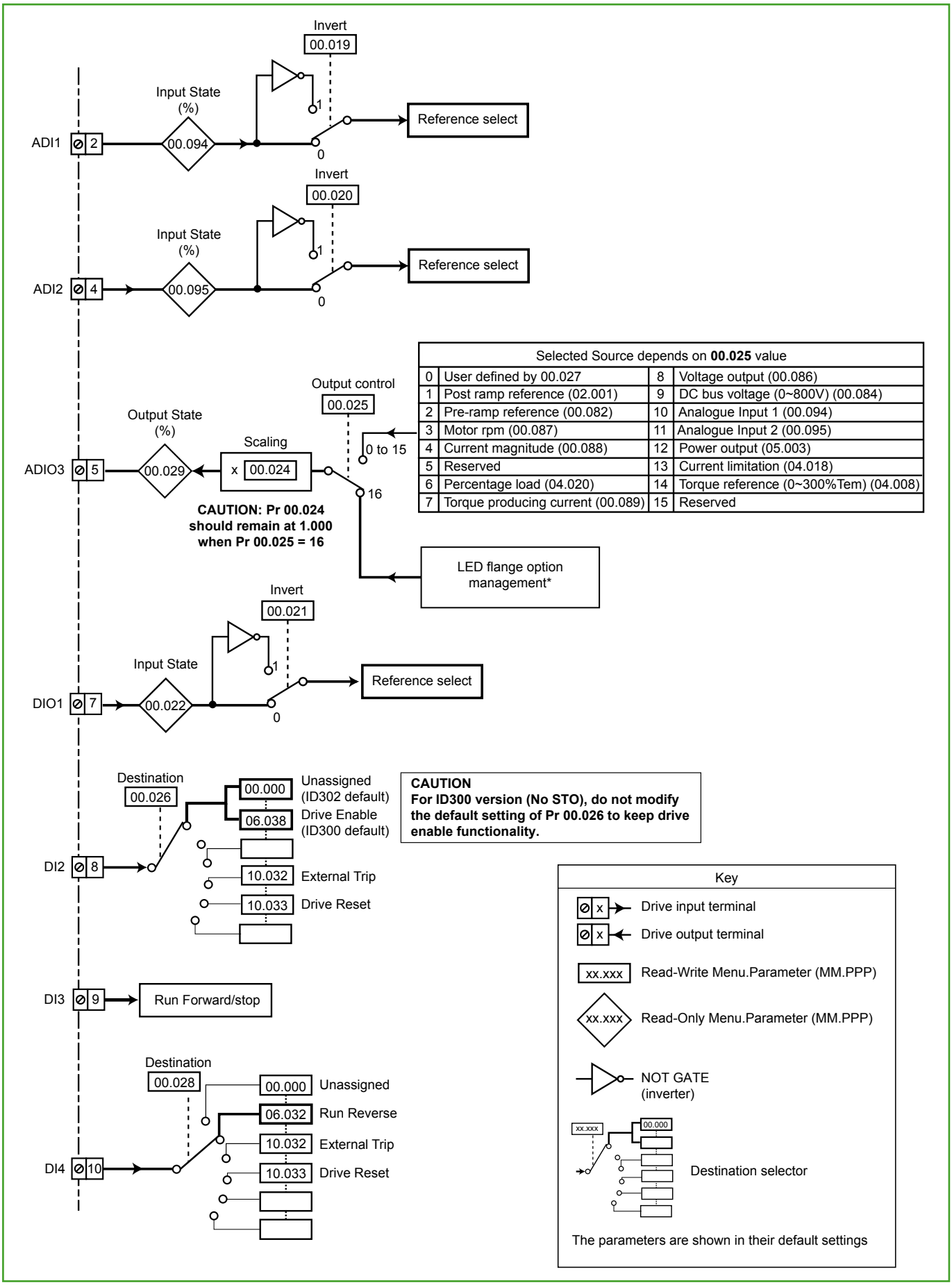

Selected Source depends on **00.025** value			
0	User defined by 00.027	8	Voltage output (00.086)
1	Post ramp reference (02.001)	9	DC bus voltage (0~800V) (00.084)
2	Pre-ramp reference (00.082)	10	Analogue Input 1 (00.094)
3	Motor rpm (00.087)	11	Analogue Input 2 (00.095)
4	Current magnitude (00.088)	12	Power output (05.003)
5	Reserved	13	Current limitation (04.018)
6	Percentage load (04.020)	14	Torque reference (0~300%Tem) (04.008)
7	Torque producing current (00.089)	15	Reserved

CAUTION
For ID300 version (No STO), do not modify the default setting of Pr 00.026 to keep drive enable functionality.

* See *section 3.5, page 12* for details.

• FOR A QUICK COMMISSIONING (FROM DEFAULT SETTINGS)

- Make the required control connections as indicated above.
- During parameter setting, the drive must be disabled (terminal 8 or terminals 31 and 34 are open)
- Power up the drive
- If required set the maximum frequency Pr **00.002** (Hz), minimum frequency Pr **00.001** (Hz), acceleration rate Pr **00.003** (s/100 Hz) and deceleration rate Pr **00.004** (s/100Hz)
- Set the correct preset references 1 to 8 in Pr **00.011** to Pr **00.018**.
- The reference selection will be as follows:

ADI1	ADI2	DIO1	Selected reference
Open	Open	Open	Preset reference 1
Open	Open	Closed	Preset reference 2
Open	Closed	Open	Preset reference 3
Open	Closed	Closed	Preset reference 4
Closed	Open	Open	Preset reference 5
Closed	Open	Closed	Preset reference 6
Closed	Closed	Open	Preset reference 7
Closed	Closed	Closed	Preset reference 8

- Close the Enable terminal 8 or the STO terminals 31 & 34
- Select the required frequency reference by opening/closing ADI1, ADI2 and DIO1 terminals.
- Give a Run Forward or Run Reverse command by closing either terminal 9 or 10, or press the relevant button from the flange option.
- Stopping the motor: open terminal 9 or 10 to stop the motor under ramp control or remove the Enable signal by opening terminal 8 or 31 & 34 and the motor will coast to a stop. With the flange option, press the Stop button.

• Parameter explanation

00.011 (01.021)	**Preset Reference 1**			
00.012 (01.022)	**Preset Reference 2**			
00.013 (01.023)	**Preset Reference 3**			
00.014 (01.024)	**Preset Reference 4**			
00.015 (01.025)	**Preset Reference 5**			
00.016 (01.026)	**Preset Reference 6**			
00.017 (01.027)	**Preset Reference 7**			
00.018 (01.028)	**Preset Reference 8**			
Read-Write	↕	± VM_SPEED_FREQ_REF (Hz)	→	0.00 Hz

These parameters define the value for preset reference 1 to preset reference 8.

00.019 (07.009)	**ADI1 Invert**			
00.020 (07.013)	**ADI2 Invert**			
00.021 (08.011)	**DIO1 Invert**			
Read-Write	↕	0 or 1	→	0

These parameters are used, if necessary, to invert the input or output signal.

00.022 (08.001)	**DIO1 Input State**			
Read-Only	↕	0 or 1	→	-

Displays the state for DIO1 which is pre-configured as a digital input.

00.023	**Not used**

00.024 (07.020)	**ADIO3 Output Scaling**			
Read-Write	↕	0.000 to 40.000	→	1.000

This parameter is used, if necessary, to scale the analog output. However, this rarely proves necessary since the maximum output level (100%) automatically corresponds to the maximum value of the source parameter.

CAUTION

Pr 00.024 should remain at 1.000 if Pr 00.025 Output Control is set to 16 (LED management).

00.025 (07.057)	**ADIO3 Output Control**			
Read-Write	↕	0 to 16	→	16

This parameter offers a simple way to change the source function of the ADIO3 output.

• If Pr 00.025 = 0 to 15

Value	ADIO3 Source	Description
0	**00.000**	User defined by Pr **00.027** (no LED management). No source assigned by default
1	**02.001**	Post Ramp frequency reference
2	**00.082**	Pre Ramp frequency reference
3	**00.087**	Motor rpm
4	**00.088**	Current Magnitude
5	**-**	Reserved
6	**04.020**	Percentage load. Gives Pr **00.089(04.002)** Torque Producing Current as a percentage.
7	**00.089**	Torque producing current
8	**00.086**	Voltage output
9	**00.084**	DC bus voltage
10	**00.094**	Analogue Input 1
11	**00.095**	Analogue Input 2
12	**05.003**	Power output
13	**04.018**	Current limit
14	**04.008**	Torque reference
15	**-**	Reserved

• If Pr 00.025 = 16

ADIO3 is used to control the illumination of the 3 LED's on flange option if fitted.

The **Red LED** is illuminated if the drive is in a trip state, flashes if the drive is running with an alarm condition, and is off if the drive is healthy and not in an alarm condition.

The **Green LED** is illuminated if the input supply is healthy, flashes if the input supply is healthy and the drive output is active, and is off if the incoming supply is not healthy.

The **Yellow LED** is user defined and can be used to indicate any parameter by setting Pr **00.027**.

To know the output voltage value for the defined LED states, please see Pr **00.029**.

For more information about LED management, refer to *section 3.5, page 12*.

00.026 (08.022)	**DI2 Destination**			
Read-Write	↕	0.000 to 30.999	→	• ID300: 06.038 • ID302: 0.000

This parameter defines the input (destination) parameter for digital input 2.

As an example, find below parameters that could be set in Pr **00.026** if required.

Pr	Description
10.032	External trip
10.033	Drive reset

NOTE

For the Commander ID300, this input is assigned to the user enable function (Pr **06.038**) by default , and is not assigned for Commander ID302.

00.027 (07.019)	**ADIO3 Yellow LED Source**			
Read-Write	↕	0.000 to 30.999	→	0.000

This parameter defines the output (source) parameter that activates yellow LED.

As an example, find below parameters that could be set in Pr **00.027** if required.

Pr	Description
06.029	Hardware enable
10.003	Zero frequency
10.006	At frequency
10.009	Current limit active

00.028 (08.024)	**DI4 Destination**			
Read-Write	↕	0.000 to 30.999	→	06.032

This parameter defines the input (destination) parameter for digital input 4.

As an example, find below parameters that could be set in Pr **00.028** if required.

Pr	Description
10.032	External trip
10.033	Drive reset

NOTE

By default, this input is assigned to the Run Reverse function (Pr **06.032**). If necessary it can be disabled by setting Pr **00.028** to 0.000.

00.029 (07.003)	**ADIO3 Output State**			
Read-Only	↕	± 100.00 %	→	-

ADIO3 is used to control the illumination of the 3 LED's on flange option if fitted (Red, Green and Yellow LEDs). Pr **00.029** displays the level of the analog signal.

NOTE

By default, Yellow LED is not active. See Pr **00.027** if required.

For more information about LED management, refer to *section 3.5, page 12*.

5.6.6 - Keypad: Keypad reference and control

• Application examples
Mobile machine with local control.

• Control connections required

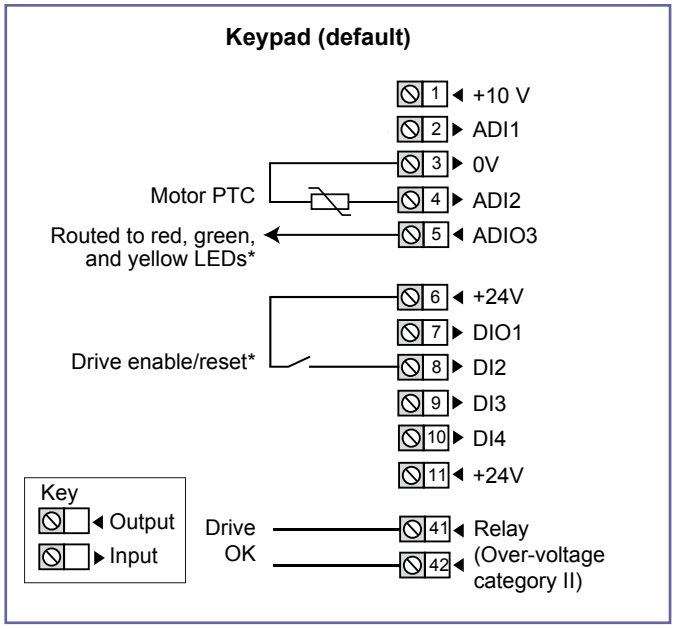

NOTE

• This configuration needs the use of a keypad option (ID-SIZEx-Keypad or Field Keypad RTC).

• If the motor has no PTC probe, there is no connection on ADI2 and 0V terminals. To avoid any trip from the drive, set Pr **00.014** to 'Therm No Trip(3)'.

*** Some connections are not necessary in the following cases:**

- If there are LEDs on side flange option, ADIO3 is already connected to them but yellow LED has no function by default. If needed, user defined functions can be set with Pr **00.027** (see *section 3.5, page 12*).
- DI2 has no function assigned by default on Commander ID302. For STO connection details, see *section 3.2, page 11*.

• Parameter list dedicated to this configuration

Parameter		Function	Range	Default value
Menu 0	**Adv. menu**			
00.011	-	Not used		
00.012				
00.013				
00.014	07.045	ADI2 Thermistor Mode	An/Dig Input(0), Therm Short Cct (1), Thermistor(2), Therm No Trip (3)	Thermistor (2)
00.015	07.047	Thermistor Feedback	0 to 4000 Ω	-
00.016	-	Not used		
00.017				
00.018				
00.019				
00.020	07.013	ADI2 Invert	0 or 1	0
00.021	-	Not used		
00.022				
00.023	07.014	ADI2 Destination	0.000 to 30.999	0.000
00.024	07.020	ADIO3 Output scaling	0.000 to 40.000	1.000
00.025	07.057	ADIO3 Output Control	0 to 16	16
00.026	08.022	DI2 Destination	0.000 to 30.999	• ID300: **06.038** • ID302: 0.000
00.027	07.019	ADIO3 Yellow LED source	0.000 to 30.999	0.000
00.028	-	Not used		
00.029	07.003	ADIO3 Output State	± 100.00 %	-

• Parameter diagram for more advanced commissioning

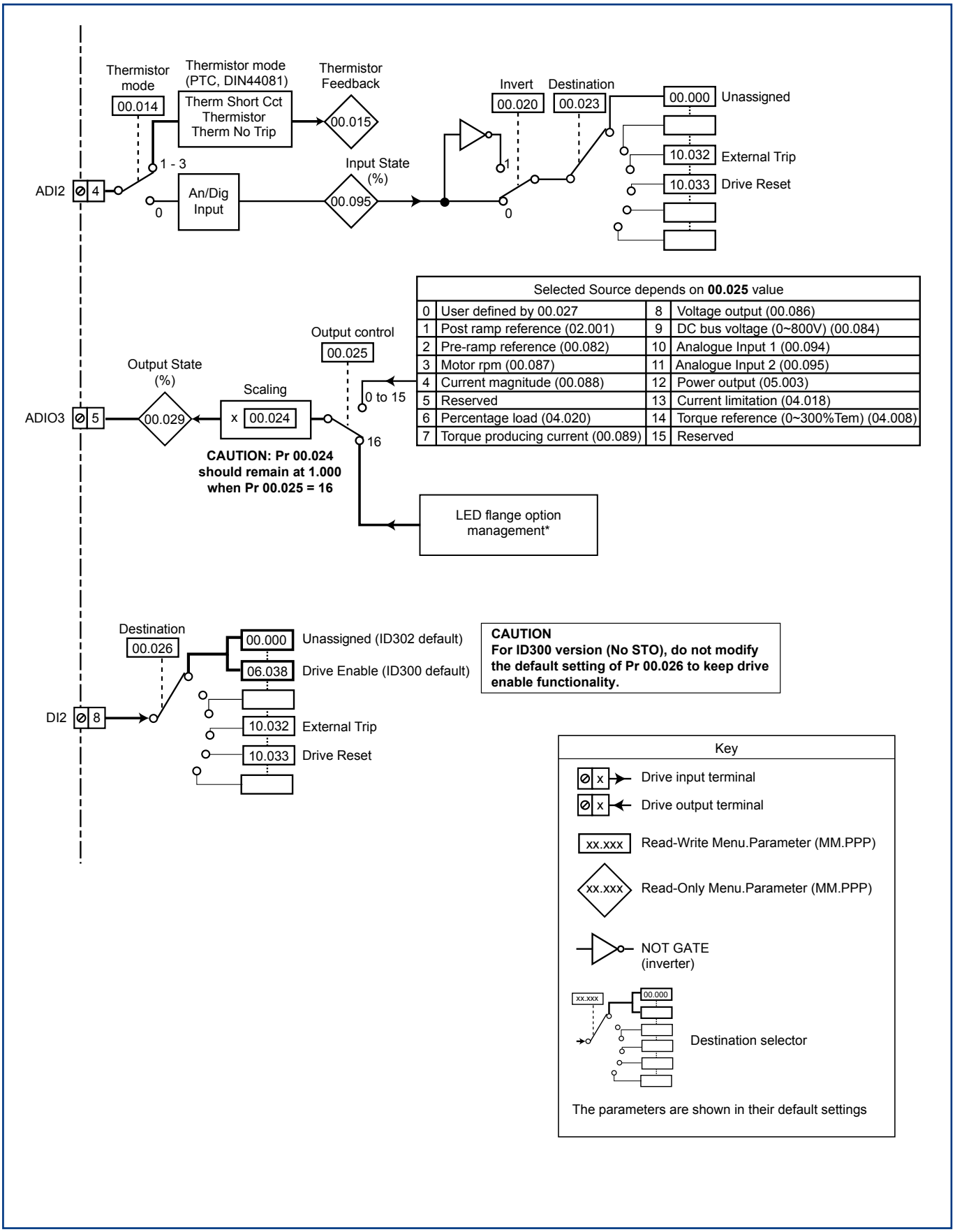

* See *section 3.5, page 12* for details.

• FOR A QUICK COMMISSIONING (FROM DEFAULT SETTINGS)

- An ID- SIZEx-Keypad or Field Keypad RTC is connected to the drive.
- Make the required control connections as indicated above.
- During parameter setting, the drive must be disabled (terminal 8 or terminals 31 and 34 are open)
- Power up the drive
- If required set the maximum frequency Pr **00.002** (Hz), minimum frequency Pr **00.001** (Hz), acceleration rate Pr **00.003** (s/100 Hz) and deceleration rate Pr **00.004** (s/100Hz)
- Close the Enable terminal 8 or the STO terminals 31 & 34
- Give a Run Forward (or Run Reverse command if present) by pressing the relevant button from the Keypad.
- Increase the speed by maintaining the upper row until the required reference is reached.
- Stopping the motor: press the stop button to stop the motor under ramp control or remove the Enable signal by opening terminal 8 or 31 & 34 and the motor will coast to a stop.

• Parameter explanation

00.011 to 00.013	**Not used**

00.014 (07.045)	**ADI2 Thermistor Mode**			
Read-Write	↕	An/Dig Input(0), Therm Short Cct(1), Thermistor(2), Therm No Trip(3)	→	Thermistor (2)

This parameter defines ADI2 mode which can be a digital input or a temperature measurement of a thermistor. The thermistor can be connected between ADI2 and 0V. By default, the thermistor type is a PTC (DIN44081). If another thermistor is used, refer to Pr **07.046** in the Parameter Reference Guide (www.commanderID300.info).

Value	Mode	Function
0	An/Dig Input	Digital input
1	Therm Short Cct	Temperature measurement input with short circuit detection (Resistance <50 Ω) with 'Th Short Circuit' trip
2	Thermistor	Temperature measurement input without short circuit detection but with 'Thermistor' trip
3	Therm No Trip	Temperature measurement input with no trip

00.015 (07.047)	**Thermistor Feedback**			
Read-Only	↕	0 to 4000 Ω	→	-

This parameter shows the measured resistance of the thermistor connected to ADI2 (if the thermistor connected and set correctly, see Pr **00.014** for more details).

00.016 to 00.019	**Not used**

00.020 (07.013)	**ADI2 Invert**			
Read-Write	↕	0 or 1	→	0

This parameter is used, if necessary, to invert the signal on ADI2 which is pre-configured as an input.

00.021 and 00.022	**Not used**

00.023 (07.014)	**ADI2 Destination**			
Read-Write	↕	0.000 to 30.999	→	0.000

Defines the output parameter (destination) for ADI2 which is pre-configured as a digital input (terminal 4).

As an example, find below parameters that could be set in Pr **00.023** if required.

Pr	Description
10.032	External trip
10.033	Drive reset

NOTE

By default, no destination parameter is assigned.

If Pr **00.014** is set to 'Therm Short Cct', 'Thermistor' or 'Therm No Trip', the ADI2 is function forced to be a thermistor input. Thus the setting of Pr **00.023** is not active. To be able to use Pr **00.023,** Pr **00.014** should be set to 'An/Dig input'.

00.024 (07.020)	**ADIO3 Output Scaling**			
Read-Write	↕	0.000 to 40.000	→	1.000

This parameter is used, if necessary, to scale the analog output. However, this rarely proves necessary since the maximum output level (100%) automatically corresponds to the maximum value of the source parameter.

CAUTION

Pr 00.024 should remain at 1.000 if Pr 00.025 Output Control is set to 16 (LED management).

00.025 (07.057)	**ADIO3 Output Control**			
Read-Write	↕	0 to 16	→	16

This parameter offers a simple way to change the source function of the ADIO3 output.

• If Pr 00.025 = 0 to 15

Value	ADIO3 Source	Description
0	**00.000**	User defined by Pr **00.027** (no LED management). No source assigned by default
1	**02.001**	Post Ramp frequency reference
2	**00.082**	Pre Ramp frequency reference
3	**00.087**	Motor rpm
4	**00.088**	Current Magnitude
5	**-**	Reserved
6	**04.020**	Percentage load. Gives Pr **00.089(04.002)** Torque Producing Current as a percentage.
7	**00.089**	Torque producing current
8	**00.086**	Voltage output
9	**00.084**	DC bus voltage

Value	ADIO3 Source	Description
10	**00.094**	Analogue Input 1
11	**00.095**	Analogue Input 2
12	**05.003**	Power output
13	**04.018**	Current limit
14	**04.008**	Torque reference
15	**-**	Reserved

• If Pr 00.025 = 16

ADIO3 is used to control the illumination of the 3 LED's on flange option if fitted.

The **Red LED** is illuminated if the drive is in a trip state, flashes if the drive is running with an alarm condition, and is off if the drive is healthy and not in an alarm condition.

The **Green LED** is illuminated if the input supply is healthy, flashes if the input supply is healthy and the drive output is active, and is off if the incoming supply is not healthy.

The **Yellow LED** is user defined and can be used to indicate any parameter by setting Pr **00.027**.

To know the output voltage value for the defined LED states, please see Pr **00.029**.

00.026 (08.022)	**DI2 Destination**			
Read-Write	↕	0.000 to 30.999	→	• ID300: 06.038 • ID302: 0.000

This parameter defines the input (destination) parameter for digital input 2.

As an example, find below parameters that could be set in Pr **00.026** if required.

Pr	Description
10.032	External trip
10.033	Drive reset

NOTE

For the Commander ID300, this input is assigned to the user enable function (Pr **06.038**) by default , and is not assigned for Commander ID302.

00.027 (07.019)	**ADIO3 Yellow LED Source**			
Read-Write	↕	0.000 to 30.999	→	0.000

This parameter defines the output (source) parameter that activates yellow LED.

As an example, find below parameters that could be set in Pr **00.027** if required.

Pr	Description
06.029	Hardware enable
10.003	Zero frequency
10.006	At frequency
10.009	Current limit active

00.028	**Not used**

00.029 (07.003)	**ADIO3 Output State**			
Read-Only	↕	± 100.00 %	→	-

ADIO3 is used to control the illumination of the 3 LED's on flange option if fitted (Red, Green and Yellow LEDs). Pr **00.029** displays the level of the analog signal.

NOTE

By default, Yellow LED is not active. See Pr **00.027** if required.

For more information about LED management, refer to *section 3.5, page 12*.

5.6.7 - Keypad Ref: Keypad reference with terminal control

• Application examples
All types of handling machines.

• Control connections required

Keypad Ref (default)

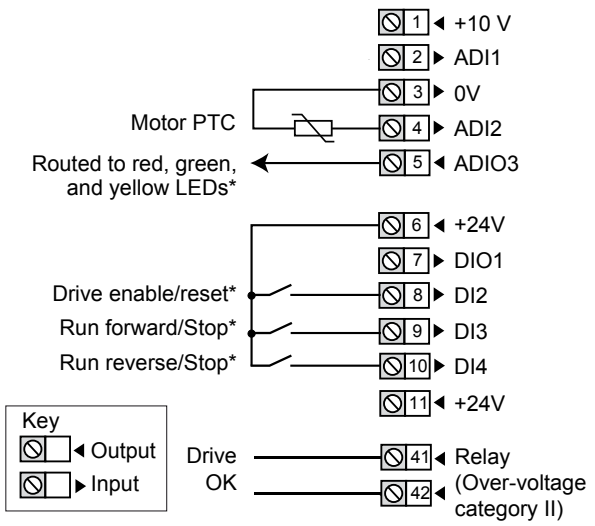

NOTE
This configuration needs the use of a keypad option (ID-SIZEx-Keypad or Field Keypad RTC).

*** Some connections are not necessary in the following cases:**

- If there are LEDs on side flange option, ADIO3 is already connected to them but yellow LED has no function by default. If needed, user defined functions can be set with Pr **00.027** (see *section 3.5, page 12*).
- DI2 has no function assigned by default on Commander ID302. For STO connection details, see *section 3.2, page 11*.
- If there are local command buttons (side flange option), DI3 and DI4 are already connected.

• Parameter list dedicated to this configuration

Parameter		Function	Range	Default value
Menu 0	Adv. menu			
00.011	-	Not used		
00.012				
00.013				
00.014	07.045	ADI2 Thermistor Mode	An/Dig Input(0), Therm Short Cct (1), Thermistor (2), Therm No Trip (3)	Thermistor (2)
00.015	07.047	Thermistor Feedback	0 to 4000 Ω	-
00.016	-	Not used		
00.017				
00.018				
00.019				
00.020	07.013	ADI2 Invert	0 or 1	0
00.021	-	Not used		
00.022				
00.023	07.014	ADI2 Destination	0.000 to 30.999	0.000
00.024	07.020	ADIO3 Output scaling	0.000 to 40.000	1.000
00.025	07.057	ADIO3 Output Control	0 to 16	16
00.026	08.022	DI2 Destination	0.000 to 30.999	• ID300: **06.038** • ID302: 0.000
00.027	07.019	ADIO3 Yellow LED source	0.000 to 30.999	0.000
00.028	08.024	DI4 Destination	0.000 à 30.999	**06.032**
00.029	07.003	ADIO3 Output State	± 100.00 %	-

• Parameter diagram for more advanced commissioning

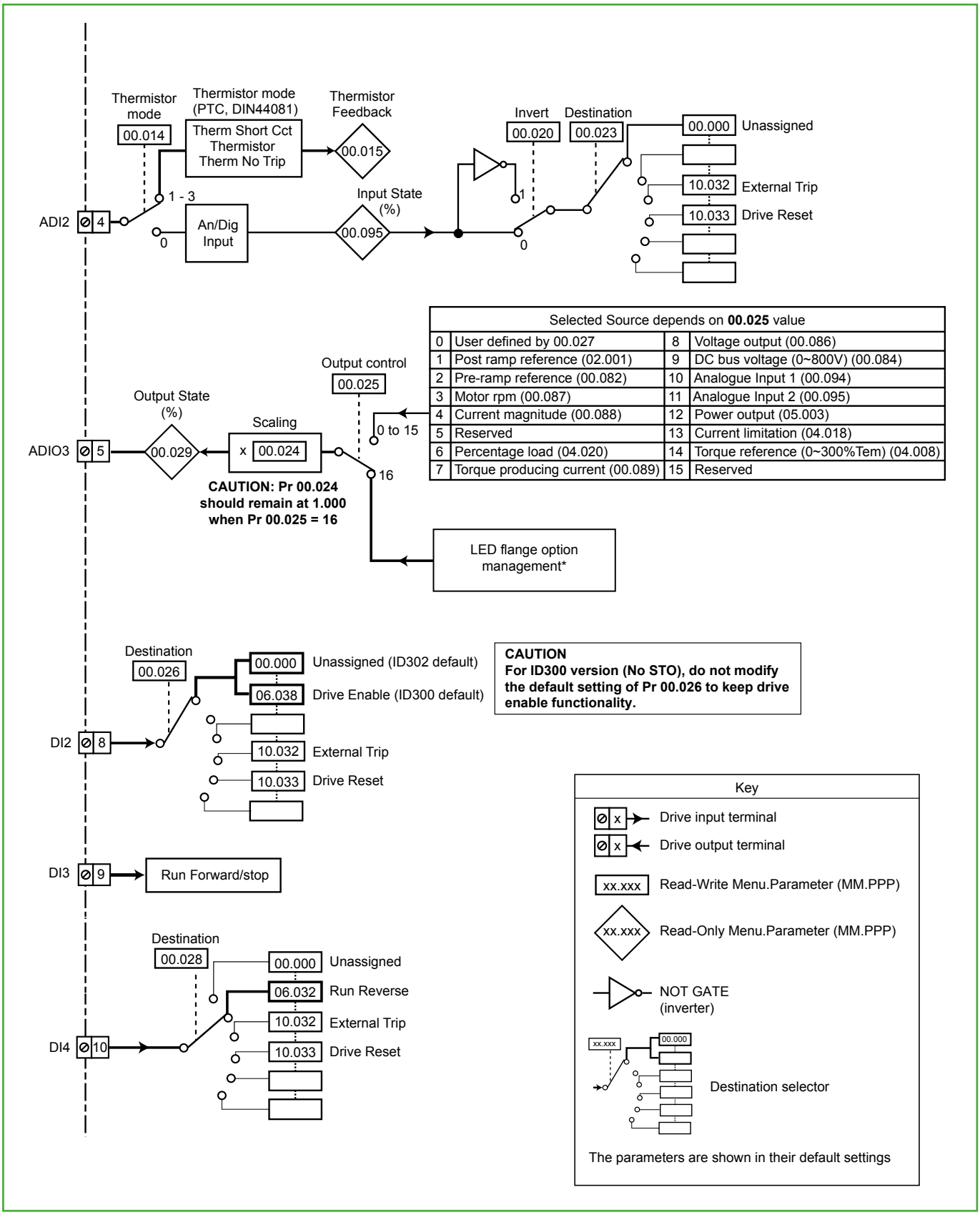

Selected Source depends on **00.025** value			
0	User defined by 00.027	8	Voltage output (00.086)
1	Post ramp reference (02.001)	9	DC bus voltage (0~800V) (00.084)
2	Pre-ramp reference (00.082)	10	Analogue Input 1 (00.094)
3	Motor rpm (00.087)	11	Analogue Input 2 (00.095)
4	Current magnitude (00.088)	12	Power output (05.003)
5	Reserved	13	Current limitation (04.018)
6	Percentage load (04.020)	14	Torque reference (0~300%Tem) (04.008)
7	Torque producing current (00.089)	15	Reserved

* See *section 3.5, page 12* for details.

• FOR A QUICK COMMISSIONING (FROM DEFAULT SETTINGS)

- An ID- SIZEx-Keypad or Field Keypad RTC is connected to the drive.
- Make the required control connections as indicated above.
- During parameter setting, the drive must be disabled (terminal 8 or terminals 31 and 34 are open)
- Power up the drive
- If required set the maximum frequency Pr **00.002** (Hz), minimum frequency Pr **00.001** (Hz), acceleration rate Pr **00.003** (s/100 Hz) and deceleration rate Pr **00.004** (s/100Hz)
- Close the Enable terminal 8 or the STO terminals 31 & 34
- Give a Run Forward or Run Reverse command by closing either terminal 9 or 10, or press the relevant button from the flange option.
- Increase the speed by maintaining the Keypad upper row until the required reference is reached.
- Stopping the motor: open terminal 9 or 10 to stop the motor under ramp control or remove the Enable signal by opening terminal 8 or 31 & 34 and the motor will coast to a stop. With the flange option, press the Stop button.

• Parameter explanation

00.011 to 00.013	**Not used**

00.014 (07.045)	**ADI2 Thermistor Mode**			
Read-Write	↕	An/Dig Input(0), Therm Short Cct(1), Thermistor(2), Therm No Trip(3)	→	Thermistor (2)

This parameter defines ADI2 mode which can be a digital input or a temperature measurement of a thermistor. The thermistor can be connected between ADI2 and 0V. By default, the thermistor type is a PTC (DIN44081). If another thermistor is used, refer to Pr **07.046** in the Parameter Reference Guide (www.commanderID300.info).

Value	Mode	Function
0	An/Dig Input	Digital input
1	Therm Short Cct	Temperature measurement input with short circuit detection (Resistance <50 Ω) with 'Th Short Circuit' trip
2	Thermistor	Temperature measurement input without short circuit detection but with 'Thermistor' trip
3	Therm No Trip	Temperature measurement input with no trip

00.015 (07.047)	**Thermistor Feedback**			
Read-Only	↕	0 to 4000 Ω	→	-

This parameter shows the measured resistance of the thermistor connected to ADI2 (if the thermistor connected and set correctly, see Pr **00.014** for more details).

00.016 to 00.019	**Not used**

00.020 (07.013)	**ADI2 Invert**			
Read-Write	↕	0 or 1	→	0

This parameter is used, if necessary, to invert the signal on ADI2 which is pre-configured as an input.

00.021 and 00.022	**Not used**

00.023 (07.014)	**ADI2 Destination**			
Read-Write	↕	0.000 to 30.999	→	0.000

Defines the output parameter (destination) for ADI2 which is pre-configured as a digital input (terminal 4).

As an example, find below parameters that could be set in Pr **00.023** if required.

Pr	Description
10.032	External trip
10.033	Drive reset

NOTE

By default, no destination parameter is assigned.

If Pr **00.014** is set to 'Therm Short Cct', 'Thermistor' or 'Therm No Trip', the ADI2 is function forced to be a thermistor input. Thus the setting of Pr **00.023** is not active. To be able to use Pr **00.023,** Pr **00.014** should be set to 'An/Dig input'.

00.024 (07.020)	**ADIO3 Output Scaling**			
Read-Write	↕	0.000 to 40.000	→	1.000

This parameter is used, if necessary, to scale the analog output. However, this rarely proves necessary since the maximum output level (100%) automatically corresponds to the maximum value of the source parameter.

CAUTION

Pr 00.024 should remain at 1.000 if Pr 00.025 Output Control is set to 16 (LED management).

00.025 (07.057)	**ADIO3 Output Control**			
Read-Write	↕	0 to 16	→	16

This parameter offers a simple way to change the source function of the ADIO3 output.

• If Pr 00.025 = 0 to 15

Value	ADIO3 Source	Description
0	**00.000**	User defined by Pr **00.027** (no LED management). No source assigned by default
1	**02.001**	Post Ramp frequency reference
2	**00.082**	Pre Ramp frequency reference
3	**00.087**	Motor rpm
4	**00.088**	Current Magnitude
5	**-**	Reserved
6	**04.020**	Percentage load. Gives Pr **00.089(04.002)** Torque Producing Current as a percentage.
7	**00.089**	Torque producing current
8	**00.086**	Voltage output
9	**00.084**	DC bus voltage

Value	ADIO3 Source	Description
10	**00.094**	Analogue Input 1
11	**00.095**	Analogue Input 2
12	**05.003**	Power output
13	**04.018**	Current limit
14	**04.008**	Torque reference
15	**-**	Reserved

• If Pr 00.025 = 16

ADIO3 is used to control the illumination of the 3 LED's on flange option if fitted.

The **Red LED** is illuminated if the drive is in a trip state, flashes if the drive is running with an alarm condition, and is off if the drive is healthy and not in an alarm condition.

The **Green LED** is illuminated if the input supply is healthy, flashes if the input supply is healthy and the drive output is active, and is off if the incoming supply is not healthy.

The **Yellow LED** is user defined and can be used to indicate any parameter by setting Pr **00.027**.

To know the output voltage value for the defined LED states, please see Pr **00.029**.

For more information about LED management, refer to *section 3.5, page 12*.

00.026 (08.022)	**DI2 Destination**			
Read-Write	↕	0.000 to 30.999	→	• ID300: 06.038 • ID302: 0.000

This parameter defines the input (destination) parameter for digital input 2.

As an example, find below parameters that could be set in Pr **00.026** if required.

Pr	Description
10.032	External trip
10.033	Drive reset

NOTE

For the Commander ID300, this input is assigned to the user enable function (Pr **06.038**) by default , and is not assigned for Commander ID302.

00.027 (07.019)	**ADIO3 Yellow LED Source**			
Read-Write	↕	0.000 to 30.999	→	0.000

This parameter defines the output (source) parameter that activates yellow LED.

As an example, find below parameters that could be set in Pr **00.027** if required.

Pr	Description
06.029	Hardware enable
10.003	Zero frequency
10.006	At frequency
10.009	Current limit active

00.028 (08.024)	**DI4 Destination**			
Read-Write	↕	0.000 to 30.999	→	06.032

This parameter defines the input (destination) parameter for digital input 4.

As an example, find below parameters that could be set in Pr **00.028** if required.

Pr	Description
10.032	External trip
10.033	Drive reset

NOTE

By default, this input is assigned to the Run Reverse function (Pr **06.032**). If necessary it can be disabled by setting Pr **00.028** to 0.000.

00.029 (07.003)	**ADIO3 Output State**			
Read-Only	↕	± 100.00 %	→	-

ADIO3 is used to control the illumination of the 3 LED's on flange option if fitted (Red, Green and Yellow LEDs). Pr **00.029** displays the level of the analog signal.

NOTE

By default, Yellow LED is not active. See Pr **00.027** if required.

For more information about LED management, refer to *section 3.5, page 12*.

5.6.8 - Electronic Pot: Electronic potentiometer

• Application examples
Mobile pumps for fluid transfer (sometimes associated with wireless customer's control), small compressors.

• Control connections required

Electronic Pot (default)

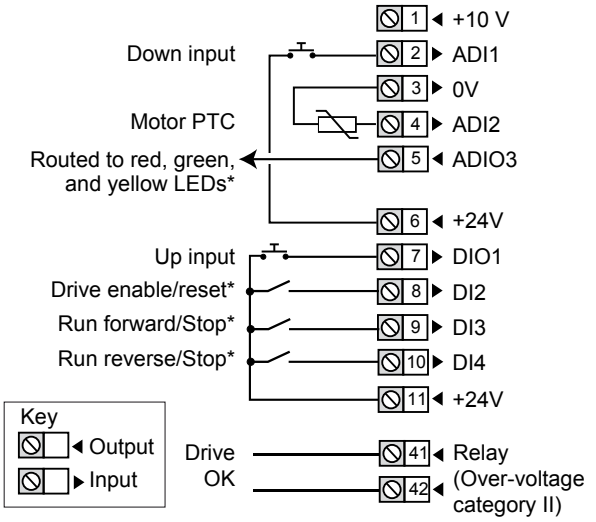

*** Some connections are not necessary in the following cases:**

- If there are LEDs on side flange option, ADIO3 is already connected to them but yellow LED has no function by default. If needed, user defined functions can be set with Pr **00.027** (see *section 3.5, page 12*).
- DI2 has no function assigned by default on Commander ID302. For STO connection details, see *section 3.2, page 11*.
- If there are local command buttons (side flange option), DI3 and DI4 are already connected.

NOTE

• If the motor has no PTC probe, there is no connection on ADI2 and 0V terminals. To avoid any trip from the drive, set Pr **00.014** to 'Therm No Trip(3)'.

• Parameter list dedicated to this configuration

Parameter		Function	Range	Default value
Menu 0	Adv. menu			
00.011	-	Not used		
00.012				
00.013				
00.014	07.045	ADI2 Thermistor Mode	An/Dig Input (0), Therm Short Cct (1), Thermistor (2), Therm No Trip (3)	Thermistor (2)
00.015	07.047	Thermistor Feedback	0 to 4000 Ω	-
00.016	09.028	Motorised Pot Reset	0 or 1	0
00.017	09.022	Motorised Pot Bipolar Select	0 or 1	0
00.018	09.023	Motorised Pot Rate	0 to 250 s	20 s
00.019	09.021	Motorised Pot Mode	0 to 4	0
00.020	07.013	ADI2 Invert	0 or 1	0
00.021	09.003	Motorised Pot Output	± 100.00 %	-
00.022	09.024	Motorised Pot Scaling	0.000 to 4.000	1.000
00.023	07.014	ADI2 Destination	0.000 to 30.999	0.000
00.024	07.020	ADIO3 Output scaling	0.000 to 40.000	1.000
00.025	07.057	ADIO3 Output Control	0 to 16	16
00.026	08.022	DI2 Destination	0.000 to 30.999	• ID300: **06.038** • ID302: 0.000
00.027	07.019	ADIO3 Yellow LED source	0.000 to 30.999	0.000
00.028	08.024	DI4 Destination	0.000 à 30.999	**06.032**
00.029	07.003	ADIO3 Output State	± 100.00 %	-

• Parameter diagram for more advanced commissioning

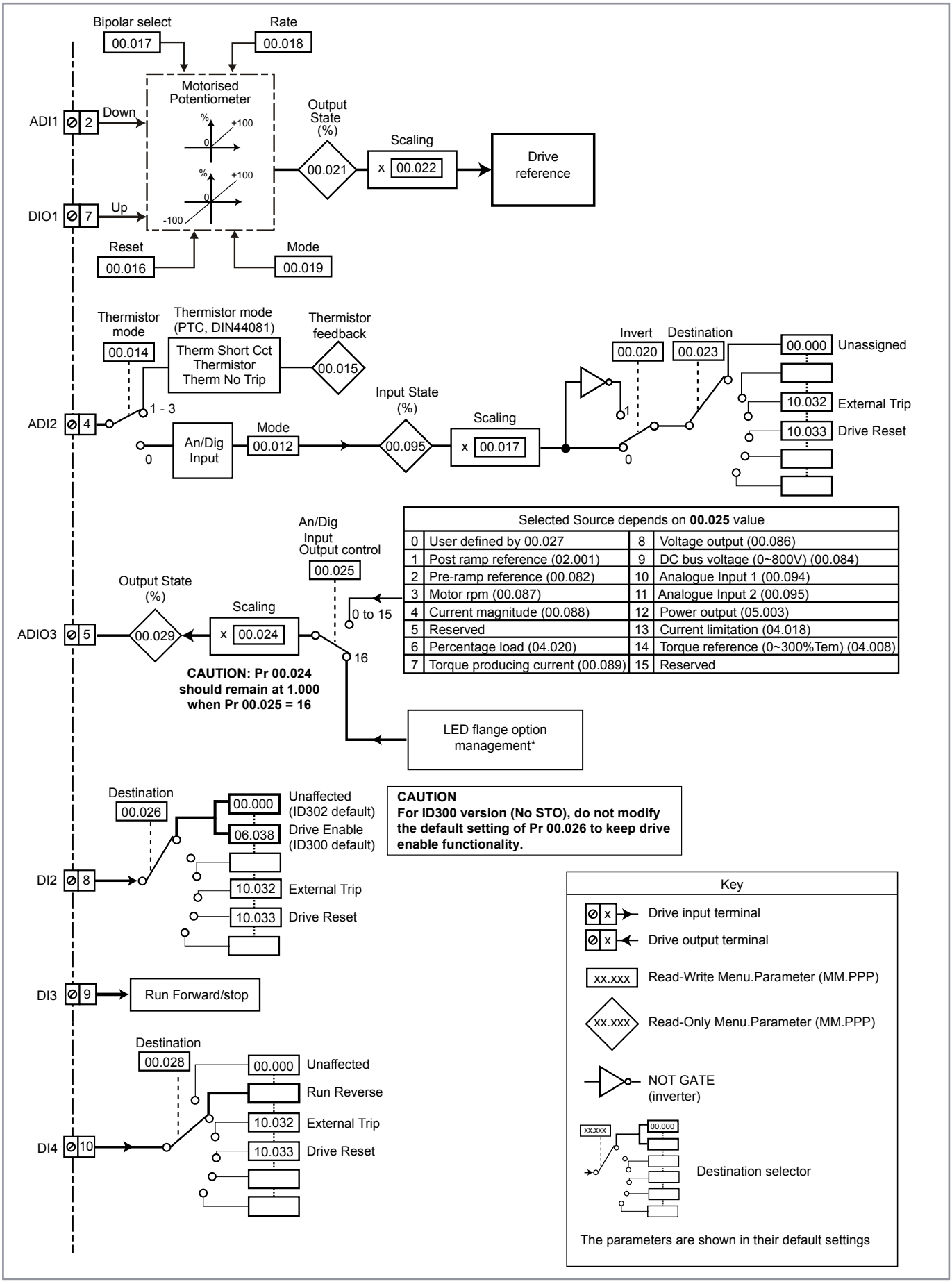

Selected Source depends on **00.025** value			
0	User defined by 00.027	8	Voltage output (00.086)
1	Post ramp reference (02.001)	9	DC bus voltage (0~800V) (00.084)
2	Pre-ramp reference (00.082)	10	Analogue Input 1 (00.094)
3	Motor rpm (00.087)	11	Analogue Input 2 (00.095)
4	Current magnitude (00.088)	12	Power output (05.003)
5	Reserved	13	Current limitation (04.018)
6	Percentage load (04.020)	14	Torque reference (0~300%Tem) (04.008)
7	Torque producing current (00.089)	15	Reserved

CAUTION
For ID300 version (No STO), do not modify the default setting of Pr 00.026 to keep drive enable functionality.

* See *section 3.5, page 12* for details.

• FOR A QUICK COMMISSIONING (FROM DEFAULT SETTINGS)

- Make the required control connections as indicated above.
- During parameter setting, the drive must be disabled (terminal 8 or terminals 31 and 34 are open)
- Power up the drive
- If required set the maximum frequency Pr **00.002** (Hz), minimum frequency Pr **00.001** (Hz), acceleration rate Pr **00.003** (s/100 Hz) and deceleration rate Pr **00.004** (s/100Hz)
- Set the parameters dedicated to the electronic potentiometer, especially the Mode Pr **00.019** (see following table) and the Rate Pr **00.018** (time to change from 0 to 100%).

Mot. Pot. Mode (Pr 00.019)	Motorised Pot Output (Pr 00.021)	Motorised Pot Up & Down active (DIO1 / ADI1)
0	Reset to 0 at power-up	Always
1	Set to power-down value at power-up	Always
2	Reset to 0 at power-up	When "Drive Active" Pr **00.080** = 1
3	Set to power-down value at power-up	When "Drive Active" Pr **00.080** = 1
4	Reset to 0 at power-up and when "Drive Active" Pr **00.080** = 0	When "Drive Active" Pr **00.080** = 1

- Close the Enable terminal 8 or the STO terminals 31 & 34.
- Give a Run Forward or Run Reverse command by closing either terminal 9 or 10, or press the relevant button from the flange option.
- Close/open either Up/down contacts as required (latched contacts)
- Stopping the motor: open terminal 9 or 10 to stop the motor under ramp control or remove the Enable signal by opening terminal 8 or 31 & 34 and the motor will coast to a stop. With the flange option, press the Stop button.

• Parameter explanation

00.011 to 00.013	**Not used**

00.014 (07.045)	**ADI2 Thermistor Mode**			
Read-Write	↕	An/Dig Input(0), Therm Short Cct(1), Thermistor(2), Therm No Trip(3)	→	Thermistor (2)

This parameter defines ADI2 mode which can be a digital input or a temperature measurement of a thermistor. The thermistor can be connected between ADI2 and 0V. By default, the thermistor type is a PTC (DIN44081). If another thermistor is used, refer to Pr **07.046** in the Parameter Reference Guide (www.commanderID300.info).

Value	Mode	Function
0	An/Dig Input	Digital input
1	Therm Short Cct	Temperature measurement input with short circuit detection (Resistance <50 Ω) with 'Th Short Circuit' trip
2	Thermistor	Temperature measurement input without short circuit detection but with 'Thermistor' trip
3	Therm No Trip	Temperature measurement input with no trip

00.015 (07.047)	**Thermistor Feedback**			
Read-Only	↕	0 to 4000 Ω	→	-

This parameter shows the measured resistance of the thermistor connected to ADI2 (if the thermistor connected and set correctly, see Pr **00.014** for more details).

00.016 (09.028)	**Motorised Pot Reset**			
Read-Write	↕	0 or 1	→	0

When this parameter is set to 1, the Pr **00.021** Motorised Pot Output is reset to zero.

00.017 (09.022)	**Motorised Pot Bipolar Select**			
Read-Write	↕	0 or 1	→	0

When this parameter is set to 1, bipolar operation of the motorised pot is enabled.

If it is set to 0, the Motorised Pot output range is 0.00% to 100.00%; if it is set to 1, it is allowed to change in the range from -100.00% to 100.00%.

00.018 (09.023)	**Motorised Pot Rate**			
Read-Write	↕	0 to 250 s	→	20 s

The rate of change of Motorised Pot Output is defined by Pr **00.018** which gives the time to change from 0 to 100%. The time to change from -100% to 100% is Motorised Pot Rate Pr **00.018** x 2.

00.019 (09.021)	**Motorised Pot Mode**			
Read-Write	↕	0 to 4	→	0

This parameter defines the mode of operation as given in the table below.

Pr 00.019 Value	Motorised Pot Output Pr 00.021	Mot. Pot Up & Down (DIO1 & ADI1)
0	Reset to zero at power-up	Always active
1	Set to power-down value at power-up	
2	Reset to zero at power-up	Active When 'Drive Active' (Pr **00.080** = 1)
3	Set to power-down value at power-up	
4	Reset to zero at power-up and when 'Drive Active' Pr **00.080** = 0	

00.020 (07.013)	ADI2 Invert			
Read-Write	↕	0 or 1	→	0

This parameter is used, if necessary, to invert the signal on ADI2 which is pre-configured as an input.

00.021 (09.003)	Motorised Pot Output			
Read-Only	↕	± 100.00 %	→	-

Shows the output level of the motorised pot function.

00.022 (09.024)	Motorised Pot Scaling			
Read-Write	↕	0.000 to 4.000	→	1.000

Introduces a scaling factor at the output of the motorised pot before the output is routed to the destination.

00.023 (07.014)	ADI2 Destination			
Read-Write	↕	0.000 to 30.999	→	0.000

Defines the output parameter (destination) for ADI2 which is pre-configured as a digital input (terminal 4).
As an example, find below parameters that could be set in Pr **00.023** if required.

Pr	Description
10.032	External trip
10.033	Drive reset

NOTE

By default, no destination parameter is assigned.

If Pr **00.014** is set to 'Therm Short Cct', 'Thermistor' or 'Therm No Trip', the ADI2 is function forced to be a thermistor input. Thus the setting of Pr **00.023** is not active. To be able to use Pr **00.023,** Pr **00.014** should be set to 'An/Dig input'.

00.024 (07.020)	ADIO3 Output Scaling			
Read-Write	↕	0.000 to 40.000	→	1.000

This parameter is used, if necessary, to scale the analog output. However, this rarely proves necessary since the maximum output level (100%) automatically corresponds to the maximum value of the source parameter.

CAUTION

Pr 00.024 should remain at 1.000 if Pr 00.025 Output Control is set to 16 (LED management).

00.025 (07.057)	ADIO3 Output Control			
Read-Write	↕	0 to 16	→	16

This parameter offers a simple way to change the source function of the ADIO3 output.

• If Pr 00.025 = 0 to 15

Value	ADIO3 Source	Description
0	**00.000**	User defined by Pr **00.027** (no LED management). No source assigned by default
1	**02.001**	Post Ramp frequency reference
2	**00.082**	Pre Ramp frequency reference
3	**00.087**	Motor rpm
4	**00.088**	Current Magnitude
5	**-**	Reserved
6	**04.020**	Percentage load. Gives Pr **00.089(04.002)** Torque Producing Current as a percentage.
7	**00.089**	Torque producing current
8	**00.086**	Voltage output
9	**00.084**	DC bus voltage
10	**00.094**	Analogue Input 1
11	**00.095**	Analogue Input 2
12	**05.003**	Power output
13	**04.018**	Current limit
14	**04.008**	Torque reference
15	**-**	Reserved

• If Pr 00.025 = 16

ADIO3 is used to control the illumination of the 3 LED's on flange option if fitted.

The **Red LED** is illuminated if the drive is in a trip state, flashes if the drive is running with an alarm condition, and is off if the drive is healthy and not in an alarm condition.

The **Green LED** is illuminated if the input supply is healthy, flashes if the input supply is healthy and the drive output is active, and is off if the incoming supply is not healthy.

The **Yellow LED** is user defined and can be used to indicate any parameter by setting Pr **00.027**.

To know the output voltage value for the defined LED states, please see Pr **00.029**.

For more information about LED management, refer to *section 3.5, page 12*.

00.026 (08.022)	DI2 Destination			
Read-Write	↕	0.000 to 30.999	→	• ID300: 06.038 • ID302: 0.000

This parameter defines the input (destination) parameter for digital input 2.

As an example, find below parameters that could be set in Pr **00.026** if required.

Pr	Description
10.032	External trip
10.033	Drive reset

NOTE

For the Commander ID300, this input is assigned to the user enable function (Pr **06.038**) by default , and is not assigned for Commander ID302.

00.027 (07.019)	ADIO3 Yellow LED Source			
Read-Write	↕	0.000 to 30.999	→	0.000

This parameter defines the output (source) parameter that activates yellow LED.

As an example, find below parameters that could be set in Pr **00.027** if required.

Pr	Description
06.029	Hardware enable
10.003	Zero frequency
10.006	At frequency
10.009	Current limit active

00.028 (08.024)	DI4 Destination			
Read-Write	↕	0.000 to 30.999	→	06.032

This parameter defines the input (destination) parameter for digital input 4.

As an example, find below parameters that could be set in Pr **00.028** if required.

Pr	Description
10.032	External trip
10.033	Drive reset

NOTE

By default, this input is assigned to the Run Reverse function (Pr **06.032**). If necessary it can be disabled by setting Pr **00.028** to 0.000.

00.029 (07.003)	ADIO3 Output State			
Read-Only	↕	± 100.00 %	→	-

ADIO3 is used to control the illumination of the 3 LED's on flange option if fitted (Red, Green and Yellow LEDs). Pr **00.029** displays the level of the analog signal.

NOTE

By default, Yellow LED is not active. See Pr **00.027** if required.

For more information about LED management, refer to *section 3.5, page 12*.

5.6.9 - Torque control: Voltage frequency reference (ADI1) or voltage torque reference (ADI2) selected by terminal

• Application examples
Small winches (frequency reference used to wind/unwind the cable, torque control to maintain cable tension).

• Control connections required

Torque control (default)

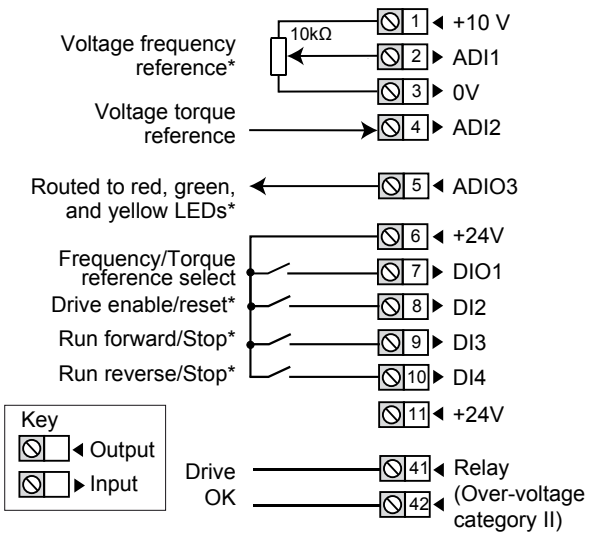

*** Some connections are not necessary in the following cases:**

- If there is a local potentiometer (side flange options), ADI1 is already connected.
- If there are LEDs on side flange option, ADIO3 is already connected to them but yellow LED has no function by default. If needed, user defined functions can be set with Pr **00.027** (see *section 3.5, page 12*).
- DI2 has no function assigned by default on Commander ID302. For STO connection details, see *section 3.2, page 11*.
- If there are local command buttons (side flange option), DI3 and DI4 are already connected.

• Parameter list dedicated to this configuration

Parameter		Function	Range	Default value
Menu 0	**Adv. menu**			
00.011	07.007	ADI1 Mode	4-20mA Stop(-6), 20-4mA Stop (-5), 4-20mA Low (-4), 20-4mA Low (-3), 4-20mA Hold (-2), 20-4mA Hold (-1), 0-20mA (0), 20-0mA (1), 4-20mA Trp (2), 20-4mA Trp (3), 4-20mA (4), 20-4mA (5), Voltage (6), Digital (7)	Voltage (6)
00.012	07.011	ADI2 Mode		
00.013	-	Not used		
00.014				
00.015				
00.016	07.008	ADI1 Scaling	0.000 to 10.000	1.000
00.017	07.012	ADI2 Scaling	0.000 to 10.000	1.000
00.018	-	Not used		
00.019	07.009	ADI1 Invert	0 or 1	0
00.020	07.013	ADI2 Invert	0 or 1	0
00.021	-	Not used		
00.022	08.001	DIO1 Input State	0 or 1	-
00.023	-	Not used		
00.024	07.020	ADIO3 Output Scaling	0.000 to 40.000	1.000
00.025	07.057	ADIO3 Output Control	0 to 16	16
00.026	08.022	DI2 Destination	0.000 to 30.999	• ID300: **06.038** • ID302: 0
00.027	07.019	ADIO3 Yellow LED source	0.000 to 30.999	0.000
00.028	08.024	DI4 Destination	0.000 à 30.999	**06.032**
00.029	07.003	ADIO3 Output State	± 100.00 %	-

• Parameter diagram for more advanced commissioning

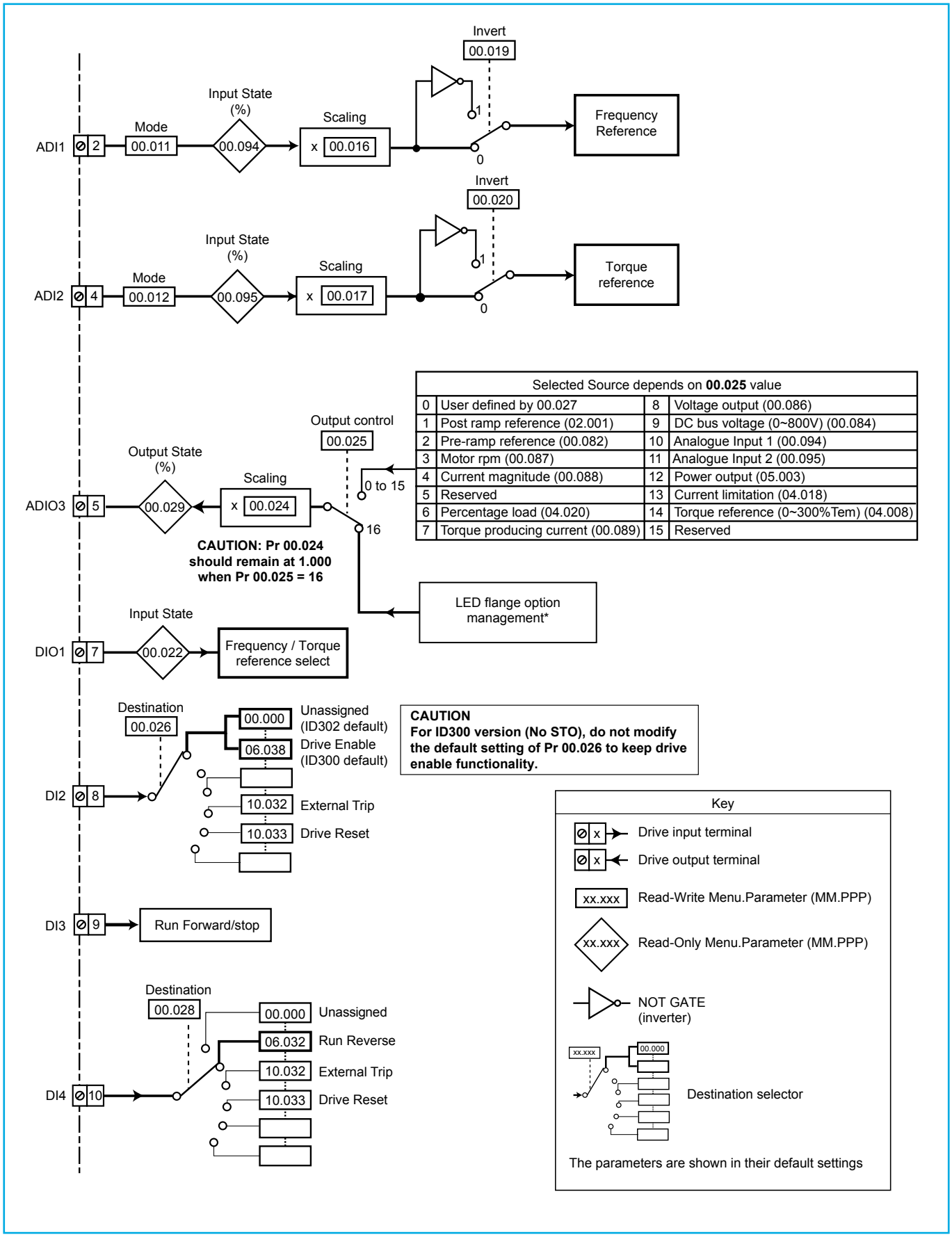

Selected Source depends on **00.025** value			
0	User defined by 00.027	8	Voltage output (00.086)
1	Post ramp reference (02.001)	9	DC bus voltage (0~800V) (00.084)
2	Pre-ramp reference (00.082)	10	Analogue Input 1 (00.094)
3	Motor rpm (00.087)	11	Analogue Input 2 (00.095)
4	Current magnitude (00.088)	12	Power output (05.003)
5	Reserved	13	Current limitation (04.018)
6	Percentage load (04.020)	14	Torque reference (0~300%Tem) (04.008)
7	Torque producing current (00.089)	15	Reserved

* See *section 3.5, page 12* for details.

• FOR A QUICK COMMISSIONING (FROM DEFAULT SETTINGS)

- Make the required control connections as indicated above.
- During parameter setting, the drive must be disabled (terminal 8 or terminals 31 and 34 are open).
- Power up the drive.
- If required set the maximum frequency Pr **00.002** (Hz), minimum frequency Pr **00.001** (Hz), acceleration rate Pr **00.003** (s/100 Hz) and deceleration rate Pr **00.004** (s/100Hz).
- The reference selection will be as follows:

DIO1	Selected reference
Open	Voltage frequency reference on ADI1
Closed	Torque reference on ADI2

- Close the Enable terminal 8 or the STO terminals 31 & 34
- Give a Run Forward or Run Reverse command by closing either terminal 9 or 10, or press the relevant button from the flange option.
- Adjust the frequency or Torque reference until the correct speed reference is reached.
- Stopping the motor: open terminal 9 or 10 to stop the motor under ramp control or remove the Enable signal by opening terminal 8 or 31 & 34 and the motor will coast to a stop. With the flange option, press the Stop button.

• When torque mode is selected and the drive is connected to an unloaded motor, the motor speed may increase rapidly to the maximum speed (Pr 00.002 + 10%).

• Do not change from speed to torque regulation whilst Run command is active.

• Parameter explanation

00.011 (07.007)	ADI1 Mode			
00.012 (07.011)	ADI2 Mode			
Read-Write	↕	See table below	→	Voltage

The table below gives all the possible input modes.

Value	Mode	Function
-6	4-20mA Stop	4-20mA or 20-4 mA signal with stop on current loss (1)
-5	20-4mA Stop	
-4	4-20mA Low	4-20mA or 20-4 mA signal with switching to equivalent of 4mA input current on current loss (1)
-3	20-4mA Low	
-2	4-20mA Hold	4-20mA or 20-4 mA signal with hold at level before loss on current loss (1)
-1	20-4mA Hold	
0	0-20mA	0-20mA or 20-0mA signal
1	20-0mA	
2	4-20mA Trp	4-20mA or 20-4 mA signal with 'An Input 1 or 2 Loss' trip on current loss (1)
3	20-4mA Trp	
4	4-20mA	4-20mA or 20-4 mA signal with no action on current loss (1)
5	20-4mA	
6	Voltage	Voltage signal
7	Digital	Digital

(1) Current loss: the current is below 3mA.

00.013 to 00.15	Not used

00.016 (07.008)	ADI1 Scaling			
00.017 (07.012)	ADI2 Scaling			
Read-Write	↕	0 to 10.000	→	1.000

These parameters are used, if necessary, to scale the analog inputs. However, this rarely proves necessary since the maximum input level (100%) automatically corresponds to the maximum value of the destination parameter. Pr **00.016** and **00.017** have no effect if ADI1 Mode (**00.011**) or ADI2 Mode (**00.012**) = Digital.

00.018	Not used

00.019 (07.009)	ADI1 Invert			
00.020 (07.013)	ADI2 Invert			
Read-Write	↕	0 or 1	→	0

These parameters are used, if necessary, to invert the input signal.

00.021	Not used

00.022 (08.001)	DIO1 Input State			
Read-Only	↕	0 or 1	→	-

This parameter displays the state for DIO1 which is pre-configured as a digital input to select either frequency or torque reference.

00.023	Not used

00.024 (07.020)	ADIO3 Output Scaling			
Read-Write	↕	0.000 to 40.000	→	1.000

This parameter is used, if necessary, to scale the analog output. However, this rarely proves necessary since the maximum output level (100%) automatically corresponds to the maximum value of the source parameter.

CAUTION

Pr 00.024 should remain at 1.000 if Pr 00.025 Output Control is set to 16 (LED management).

00.025 (07.057)	ADIO3 Output Control			
Read-Write	↕	0 to 16	→	16

This parameter offers a simple way to change the source function of the ADIO3 output.

• If Pr 00.025 = 0 to 15

Value	ADIO3 Source	Description
0	**00.000**	User defined by Pr **00.027** (no LED management). No source assigned by default
1	**02.001**	Post Ramp frequency reference
2	**00.082**	Pre Ramp frequency reference
3	**00.087**	Motor rpm

Value	ADIO3 Source	Description
4	**00.088**	Current Magnitude
5	**-**	Reserved
6	**04.020**	Percentage load. Gives Pr **00.089(04.002)** Torque Producing Current as a percentage.
7	**00.089**	Torque producing current
8	**00.086**	Voltage output
9	**00.084**	DC bus voltage
10	**00.094**	Analogue Input 1
11	**00.095**	Analogue Input 2
12	**05.003**	Power output
13	**04.018**	Current limit
14	**04.008**	Torque reference
15	**-**	Reserved

• If Pr 00.025 = 16

ADIO3 is used to control the illumination of the 3 LED's on flange option if fitted.

The **Red LED** is illuminated if the drive is in a trip state, flashes if the drive is running with an alarm condition, and is off if the drive is healthy and not in an alarm condition.

The **Green LED** is illuminated if the input supply is healthy, flashes if the input supply is healthy and the drive output is active, and is off if the incoming supply is not healthy.

The **Yellow LED** is user defined and can be used to indicate any parameter by setting Pr **00.027**.

To know the output voltage value for the defined LED states, please see Pr **00.029**.

For more information about LED management, refer to *section 3.5, page 12*.

00.026 (08.022)	**DI2 Destination**			
Read-Write	↕	0.000 to 30.999	→	• ID300: 06.038 • ID302: 0.000

This parameter defines the input (destination) parameter for digital input 2.

As an example, find below parameters that could be set in Pr **00.026** if required.

Pr	Description
10.032	External trip
10.033	Drive reset

NOTE

For the Commander ID300, this input is assigned to the user enable function (Pr **06.038**) by default , and is not assigned for Commander ID302.

00.027 (07.019)	**ADIO3 Yellow LED Source**			
Read-Write	↕	0.000 to 30.999	→	0.000

This parameter defines the output (source) parameter that activates yellow LED.

As an example, find below parameters that could be set in Pr **00.027** if required.

Pr	Description
06.029	Hardware enable
10.003	Zero frequency
10.006	At frequency
10.009	Current limit active

00.028 (08.024)	**DI4 Destination**			
Read-Write	↕	0.000 to 30.999	→	06.032

This parameter defines the input (destination) parameter for digital input 4.

As an example, find below parameters that could be set in Pr **00.028** if required.

Pr	Description
10.032	External trip
10.033	Drive reset

NOTE

By default, this input is assigned to the Run Reverse function (Pr **06.032**). If necessary it can be disabled by setting Pr **00.028** to 0.000.

00.029 (07.003)	**ADIO3 Output State**			
Read-Only	↕	± 100.00 %	→	-

ADIO3 is used to control the illumination of the 3 LED's on flange option if fitted (Red, Green and Yellow LEDs). Pr **00.029** displays the level of the analog signal.

NOTE

By default, Yellow LED is not active. See Pr **00.027** if required.

For more information about LED management, refer to *section 3.5, page 12*.

5.6.10 - PID control: Voltage reference source (ADI1) and Voltage feedback source (ADI2)

• Application examples
All kinds of motor regulation for pressure, temperature, flow, etc.

• Control connections required

PID control (default)

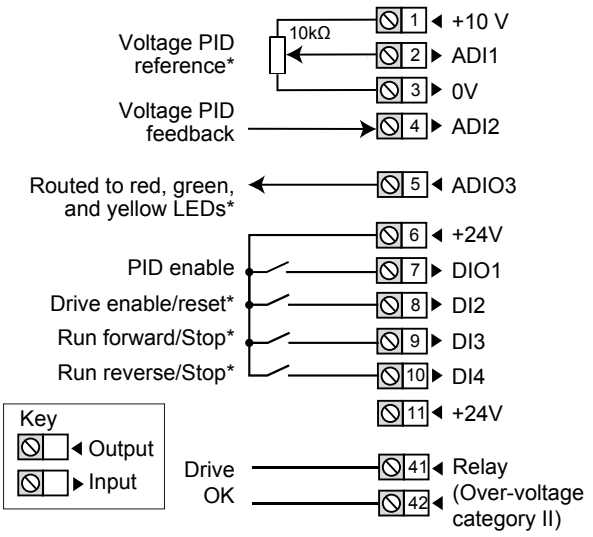

*** Some connections are not necessary in the following cases:**

- If there is a local potentiometer (side flange options), ADI1 is already connected.
- If there are LEDs on side flange option, ADIO3 is already connected to them but yellow LED has no function by default. If needed, user defined functions can be set with Pr **00.027** (see *section 3.5, page 12*).
- DI2 has no function assigned by default on Commander ID302. For STO connection details, see *section 3.2, page 11*.
- If there are local command buttons (side flange option), DI3 and DI4 are already connected.

• Parameter list dedicated to this configuration

Parameter		Function	Range	Default value
Menu 0	**Adv. menu**			
00.011	07.007	ADI1 Mode	4-20mA Stop(-6), 20-4mA Stop (-5), 4-20mA Low (-4), 20-4mA Low (-3), 4-20mA Hold (-2), 20-4mA Hold (-1), 0-20mA (0), 20-0mA (1), 4-20mA Trp (2), 20-4mA Trp (3), 4-20mA (4), 20-4mA (5), Voltage (6), Digital (7)	Voltage (6)
00.012	07.011	ADI2 Mode		
00.013	14.010	PID Proportional Gain	0.000 to 4.000	1.000
00.014	14.011	PID Integral Gain	0.000 to 4.000	0.500
00.015	14.012	PID Differential Gain	0.000 to 4.000	0.000
00.016	14.013	PID Output Upper Limit	0.00 to 100.00 %	100.00 %
00.017	14.014	PID Output Lower Limit	± 100.00 %	- 100.00 %
00.018	14.015	PID Output Scaling	0.000 to 4.000	1.000
00.019	14.024	PID Feedback Scaling	0.000 to 4.000	1.000
00.020	14.021	PID Feedback	± 100.00 %	-
00.021	14.006	PID Feedback Invert	0 or 1	0
00.022	14.020	PID Reference	± 100.00 %	-
00.023	14.022	PID Error	± 100%	-
00.024	14.001	PID Output	± 100%	-
00.025	07.057	ADIO3 Output Control	0 to 16	16
00.026	08.022	DI2 Destination	0.000 to 30.999	• ID300: **06.038** • ID302: 0.000
00.027	07.019	ADIO3 Yellow LED source	0.000 to 30.999	0.000
00.028	08.024	DI4 Destination	0.000 à 30.999	**06.032**
00.029	07.003	ADIO3 Output State	± 100.00 %	-

• Parameter diagram for more advanced commissioning

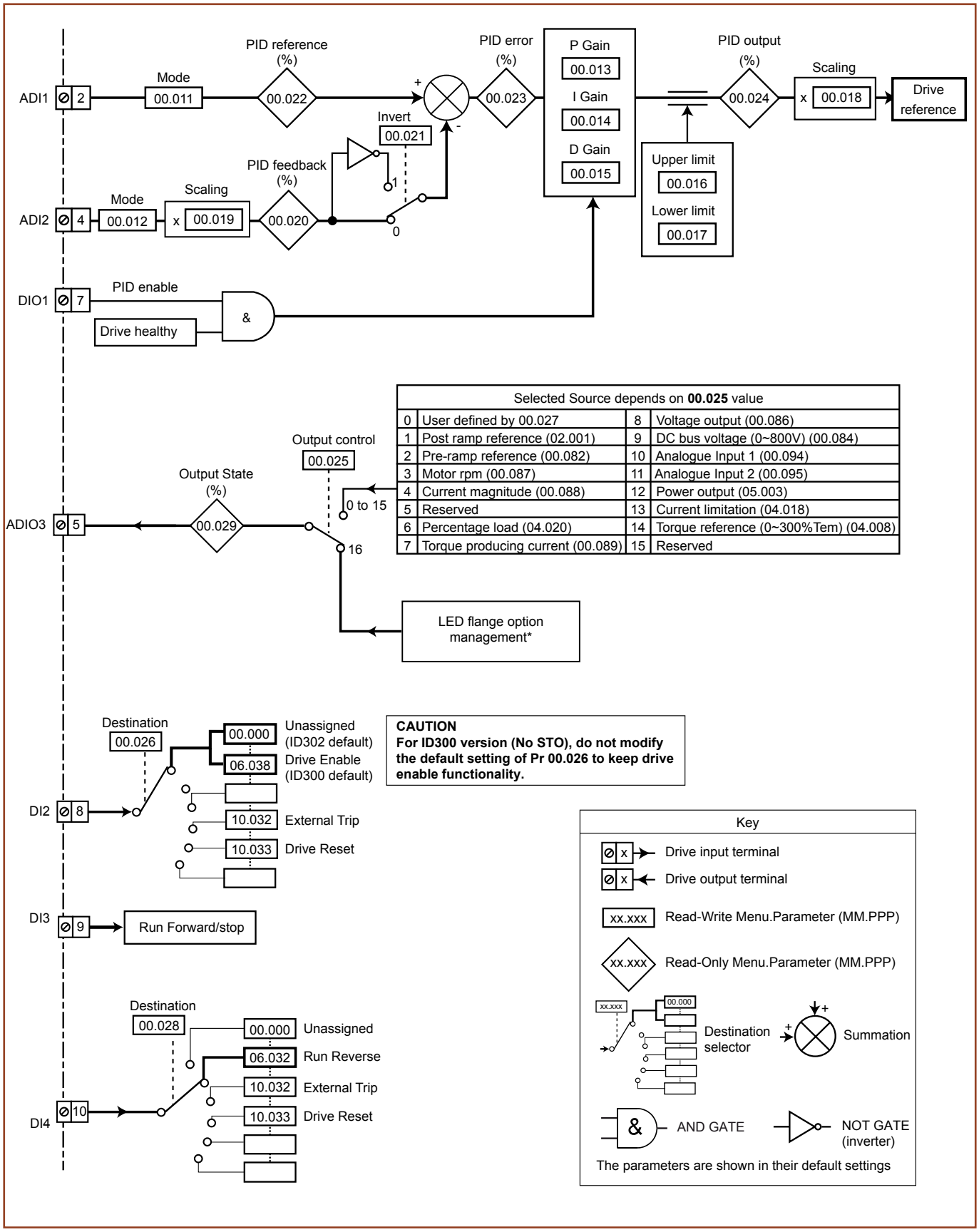

Selected Source depends on **00.025** value			
0	User defined by 00.027	8	Voltage output (00.086)
1	Post ramp reference (02.001)	9	DC bus voltage (0~800V) (00.084)
2	Pre-ramp reference (00.082)	10	Analogue Input 1 (00.094)
3	Motor rpm (00.087)	11	Analogue Input 2 (00.095)
4	Current magnitude (00.088)	12	Power output (05.003)
5	Reserved	13	Current limitation (04.018)
6	Percentage load (04.020)	14	Torque reference (0~300%Tem) (04.008)
7	Torque producing current (00.089)	15	Reserved

CAUTION
For ID300 version (No STO), do not modify the default setting of Pr 00.026 to keep drive enable functionality.

* See *section 3.5, page 12* for details.

• FOR A QUICK COMMISSIONING (FROM DEFAULT SETTINGS)

- Make the required control connections as indicated above.
- During parameter setting, the drive must be disabled (terminal 8 or terminals 31 and 34 are open)
- Power up the drive
- If required set the maximum frequency Pr **00.002** (Hz), minimum frequency Pr **00.001** (Hz), acceleration rate Pr **00.003** (s/100 Hz) and deceleration rate Pr **00.004** (s/100Hz).
- Close the Enable terminal 8 or the STO terminals 31 & 34.
- Give a Run Forward or Run Reverse command by closing either terminal 9 or 10, or press the relevant button from the flange option.
- Close terminal 7 to enable the PID.
- Adjust the PID reference.
- Stopping the motor: open terminal 9 or 10 to stop the motor under ramp control or remove the Enable signal by opening terminal 8 or 31 & 34 and the motor will coast to a stop. With the flange option, press the Stop button.

• Parameter explanation

00.011 (07.007)	ADI1 Mode		
00.012 (07.011)	ADI2 Mode		
Read-Write	↕	See table below	→ Voltage

The table below gives all the possible input modes.

Value	Mode	Function
-6	4-20mA Stop	4-20mA or 20-4 mA signal with stop on current loss (1)
-5	20-4mA Stop	
-4	4-20mA Low	4-20mA or 20-4 mA signal with switching to equivalent of 4mA input current on current loss (1)
-3	20-4mA Low	
-2	4-20mA Hold	4-20mA or 20-4 mA signal with hold at level before loss on current loss (1)
-1	20-4mA Hold	
0	0-20mA	0-20mA or 20-0mA signal
1	20-0mA	
2	4-20mA Trp	4-20mA or 20-4 mA signal with 'An Input 1 or 2 Loss' trip on current loss (1)
3	20-4mA Trp	
4	4-20mA	4-20mA or 20-4 mA signal with no action on current loss (1)
5	20-4mA	
6	Voltage	Voltage signal
7	Digital	Digital

(1) Current loss: the current is below 3mA.

00.013 (14.010)	PID Proportional gain		
Read-Write	↕	0.000 to 4.000	→ 1.000

This is the proportional gain applied to the PID error.

00.014 (14.011)	PID Integral gain		
Read-Write	↕	0.000 to 4.000	→ 0.500

This is the integral gain applied to the PID error.

00.015 (14.012)	PID Differential gain		
Read-Write	↕	0.000 to 4.000	→ 0.500

This is the differiential gain applied to the PID error.

00.016 (14.013)	PID Output Upper Limit		
Read-Write	↕	±100.00 %	→ 100.00 %
00.017 (14.014)	PID Output Lower Limit		
Read-Write	↕	± 100.00 %	→ -100.00 %

The output can be limited to a range that is less than the maximum range of Pr **00.024** PID Output using Pr **00.016** PID Output Upper Limit and Pr **00.017** PID Output Lower Limit.

00.018 (14.015)	PID Output Scaling		
Read-Write	↕	0.000 to 4.000	→ 1.000

This parameter can be used to scale the output.

00.019 (14.024)	PID Feedback Scaling		
Read-Write	↕	0.000 to 4.000	→ 1.000

This parameter defines the scaling factor of the PID feedback.

00.020 (14.021)	PID Feedback		
Read-Only	↕	±100.00 %	→ -

This parameter displays the value of the PID feedback.

00.021 (14.006)	PID Feedback Invert		
Read-Write	↕	0 or 1	→ 0

If this parameter is set to 1, the PID feedback signal is inverted.

00.022 (14.020)	PID Reference		
Read-Only	↕	±100.00 %	→ -

Displays the value of the PID reference.

00.023 (14.022)	PID Error		
Read-Only	↕	±100.00 %	→ -

This parameter displays the value of the error for PID. It is the difference between the reference and feedback.

00.024 (14.001)	PID Output		
Read-Only	↕	±100.00 %	→ -

This parameter displays the value of the PID controller output level.

Pr **00.024** = Pr **00.023** PID Error x [Pr **00.013** (Kp) + Pr **00.014** (Ki)/s + s Pr **00.015** (Kd)/(0.064s + 1)].

00.025 (07.057)	ADIO3 Output Control			
Read-Write	↕	0 to 16	→	16

This parameter offers a simple way to change the source function of the ADIO3 output.

• If Pr 00.025 = 0 to 15

Value	ADIO3 Source	Description
0	**00.000**	User defined by Pr **00.027** (no LED management). No source assigned by default
1	**02.001**	Post Ramp frequency reference
2	**00.082**	Pre Ramp frequency reference
3	**00.087**	Motor rpm
4	**00.088**	Current Magnitude
5	**-**	Reserved
6	**04.020**	Percentage load. Gives Pr **00.089(04.002)** Torque Producing Current as a percentage.
7	**00.089**	Torque producing current
8	**00.086**	Voltage output
9	**00.084**	DC bus voltage
10	**00.094**	Analogue Input 1
11	**00.095**	Analogue Input 2
12	**05.003**	Power output
13	**04.018**	Current limit
14	**04.008**	Torque reference
15	**-**	Reserved

• If Pr 00.025 = 16

ADIO3 is used to control the illumination of the 3 LED's on flange option if fitted.

The **Red LED** is illuminated if the drive is in a trip state, flashes if the drive is running with an alarm condition, and is off if the drive is healthy and not in an alarm condition.

The **Green LED** is illuminated if the input supply is healthy, flashes if the input supply is healthy and the drive output is active, and is off if the incoming supply is not healthy.

The **Yellow LED** is user defined and can be used to indicate any parameter by setting Pr **00.027**.

To know the output voltage value for the defined LED states, please see Pr **00.029**.

For more information about LED management, refer to *section 3.5, page 12*.

00.026 (08.022)	DI2 Destination			
Read-Write	↕	0.000 to 30.999	→	• ID300: 06.038 • ID302: 0.000

This parameter defines the input (destination) parameter for digital input 2.

As an example, find below parameters that could be set in Pr **00.026** if required.

Pr	Description
10.032	External trip
10.033	Drive reset

NOTE

For the Commander ID300, this input is assigned to the user enable function (Pr **06.038**) by default , and is not assigned for Commander ID302.

00.027 (07.019)	ADIO3 Yellow LED Source			
Read-Write	↕	0.000 to 30.999	→	0.000

This parameter defines the output (source) parameter that activates yellow LED.

As an example, find below parameters that could be set in Pr **00.027** if required.

Pr	Description
06.029	Hardware enable
10.003	Zero frequency
10.006	At frequency
10.009	Current limit active

00.028 (08.024)	DI4 Destination			
Read-Write	↕	0.000 to 30.999	→	06.032

This parameter defines the input (destination) parameter for digital input 4.

As an example, find below parameters that could be set in Pr **00.028** if required.

Pr	Description
10.032	External trip
10.033	Drive reset

NOTE

By default, this input is assigned to the Run Reverse function (Pr **06.032**). If necessary it can be disabled by setting Pr **00.028** to 0.000.

00.029 (07.003)	ADIO3 Output State			
Read-Only	↕	± 100.00 %	→	-

ADIO3 is used to control the illumination of the 3 LED's on flange option if fitted (Red, Green and Yellow LEDs). Pr **00.029** displays the level of the analog signal.

NOTE

By default, Yellow LED is not active. See Pr **00.027** if required.

For more information about LED management, refer to *section 3.5, page 12*.

5.6.11 - Local/Remote: Analog input 1 reference (voltage) with terminal control or Keypad reference with Keypad control selected by terminal

• Application examples
Mobil pumps for fluid transfer.

• Control connections required

Local/Remote (default)

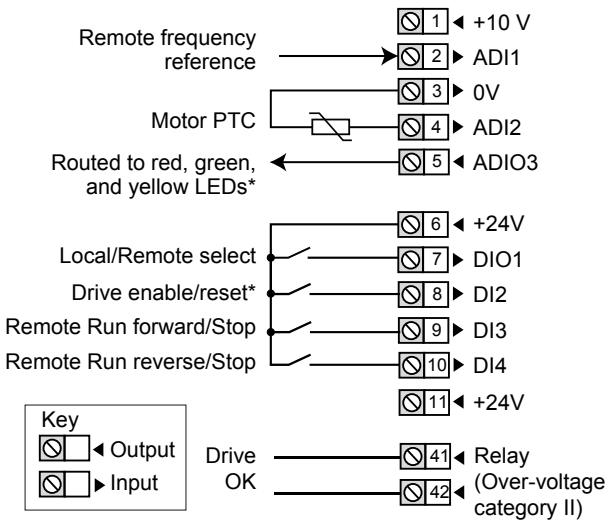

CAUTION
This configuration needs the use of a keypad option (ID-SIZEx-Keypad or Field Keypad RTC), and does NOT match with ID-RUN_POT_LED_FLANGE option.

*** Some connections are not necessary in the following cases:**

- If there are LEDs on side flange option, ADIO3 is already connected to them but yellow LED has no function by default. If needed, user defined functions can be set with Pr **00.027** (see *section 3.5, page 12*).
- DI2 has no function assigned by default on Commander ID302. For STO connection details, see *section 3.2, page 11*.

NOTE
• If the motor has no PTC probe, there is no connection on ADI2 and 0V terminals. To avoid any trip from the drive, set Pr **00.014** to 'Therm No Trip(3)'.

• Parameter list dedicated to this configuration

Parameter		Function	Range	Default value
Menu 0	Adv. menu			
00.011	07.007	ADI1 Mode	4-20mA Stop(-6), 20-4mA Stop (-5), 4-20mA Low (-4), 20-4mA Low (-3), 4-20mA Hold (-2), 20-4mA Hold (-1), 0-20mA (0), 20-0mA (1), 4-20mA Trp (2), 20-4mA Trp (3), 4-20mA (4), 20-4mA (5), Voltage (6), Digital (7)	Voltage (6)
00.012	-	Not used		
00.013				
00.014	07.045	ADI2 Thermistor Mode	An/Dig Input (0), Therm Short Cct (1), Thermistor (2), Therm No Trip (3)	Thermistor (2)
00.015	07.047	Thermistor Feedback	0 to 4000 Ω	-
00.016	07.008	ADI1 Scaling	0 .000 to 10.000	1.000
00.017	-	Not used		
00.018				
00.019	07.009	ADI1 Invert	0 or 1	0
00.020	07.013	ADI2 Invert	0 or 1	0
00.021	-	Not used		
00.022				
00.023	07.014	ADI2 Destination	0.000 to 30.999	0.000
00.024	07.020	ADIO3 Output Scaling	0.000 to 40.000	1.000
00.025	07.057	ADIO3 Output Control	0 to 16	16
00.026	08.022	DI2 Destination	0 to 30.999	• ID300: **06.038** • ID302: 0.000
00.027	07.019	ADIO3 Yellow LED source	0.000 to 30.999	0.000
00.028	08.024	DI4 Destination	0.000 à 30.999	**06.032**
00.029	07.003	ADIO3 Output State	± 100.00 %	-

• Parameter diagram for more advanced commissioning

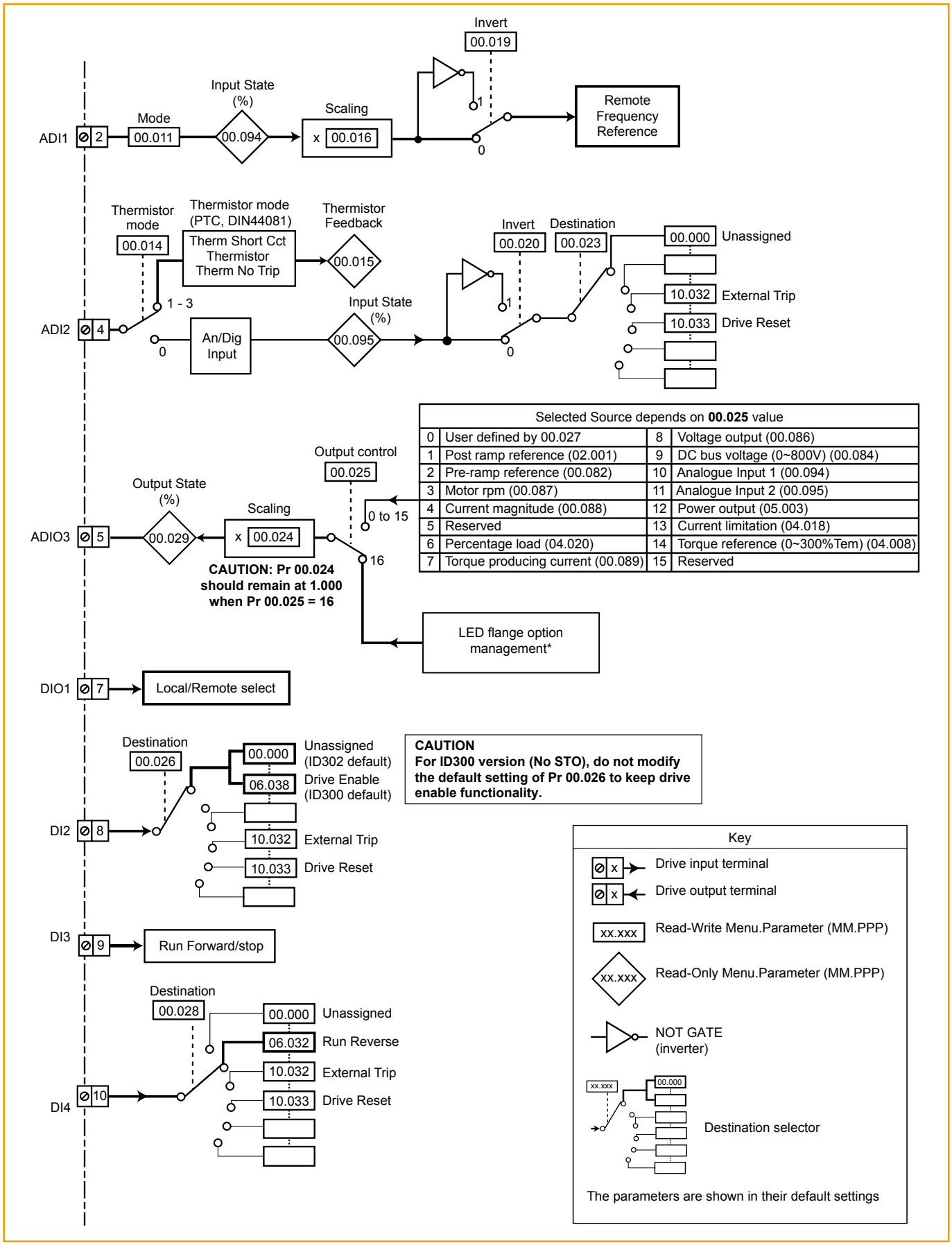

Selected Source depends on **00.025** value			
0	User defined by 00.027	8	Voltage output (00.086)
1	Post ramp reference (02.001)	9	DC bus voltage (0~800V) (00.084)
2	Pre-ramp reference (00.082)	10	Analogue Input 1 (00.094)
3	Motor rpm (00.087)	11	Analogue Input 2 (00.095)
4	Current magnitude (00.088)	12	Power output (05.003)
5	Reserved	13	Current limitation (04.018)
6	Percentage load (04.020)	14	Torque reference (0~300%Tem) (04.008)
7	Torque producing current (00.089)	15	Reserved

* See *section 3.5, page 12* for details.

• FOR A QUICK COMMISSIONING (FROM DEFAULT SETTINGS)

- Make the required control connections as indicated above.
- During parameter setting, the drive must be disabled (terminal 8 or terminals 31 and 34 are open)
- Power up the drive
- If required set the maximum frequency Pr **00.002** (Hz), minimum frequency Pr **00.001** (Hz), acceleration rate Pr **00.003** (s/100 Hz) and deceleration rate Pr **00.004** (s/100Hz).
- DIO1 will allow the following selection:

DIO1	Selection
Open	**Remote**: Frequency reference on ADI1 (0-10V) and Run/Stop commands on DI3 or DI4
Closed	**Local**: Frequency reference and Run/Stop commands from keypad option

- Close the Enable terminal 8 or the STO terminals 31 & 34
- Give a Run Forward or Run Reverse command from control terminal or keypad.
- Adjust the frequency reference from control terminal/ Potentiometer or keypad.
- Stopping the motor: Giving a stop command (from terminals or Keypad) will stop the motor under ramp control or remove the Enable signal by opening terminal 8 or 31 & 34 and the motor will coast to a stop.

NOTE

After a remote to local mode transition, the motor stops. The next start should be given by the keypad. After a local to remote mode transition, if the run command is enabled the motor will run up to remote frequency reference. It is then suggested to add an interlock between the remote run command and the local/remote selector.

• Parameter explanation

00.011 (07.007)	ADI1 Mode			
Read-Write	↕	See table below	→	Voltage

The table below gives all the possible input modes.

Value	Mode	Function
-6	4-20mA Stop	4-20mA or 20-4 mA signal with stop on current loss (1)
-5	20-4mA Stop	
-4	4-20mA Low	4-20mA or 20-4 mA signal with switching to equivalent of 4mA input current on current loss (1)
-3	20-4mA Low	
-2	4-20mA Hold	4-20mA or 20-4 mA signal with hold at level before loss on current loss (1)
-1	20-4mA Hold	
0	0-20mA	0-20mA or 20-0mA signal
1	20-0mA	
2	4-20mA Trp	4-20mA or 20-4 mA signal with 'An Input 1 or 2 Loss' trip on current loss (1)
3	20-4mA Trp	
4	4-20mA	4-20mA or 20-4 mA signal with no action on current loss (1)
5	20-4mA	
6	Voltage	Voltage signal
7	Digital	Digital

(1) Current loss: the current is below 3mA.

00.012 and 00.013	Not used

00.014 (07.045)	ADI2 Thermistor Mode			
Read-Write	↕	An/Dig Input(0), Therm Short Cct(1), Thermistor(2), Therm No Trip(3)	→	Thermistor (2)

This parameter defines ADI2 mode which can be a digital input or a temperature measurement of a thermistor. The thermistor can be connected between ADI2 and 0V. By default, the thermistor type is a PTC (DIN44081). If another thermistor is used, refer to Pr **07.046** in the Parameter Reference Guide (www.commanderID300.info).

Value	Mode	Function
0	An/Dig Input	Digital input
1	Therm Short Cct	Temperature measurement input with short circuit detection (Resistance <50 Ω) with 'Th Short Circuit' trip
2	Thermistor	Temperature measurement input without short circuit detection but with 'Thermistor' trip
3	Therm No Trip	Temperature measurement input with no trip

00.015 (07.047)	Thermistor Feedback			
Read-Only	↕	0 to 4000 Ω	→	-

This parameter shows the measured resistance of the thermistor connected to ADI2 (if the thermistor connected and set correctly, see Pr **00.014** for more details).

00.016 (07.008)	ADI1 Scaling			
Read-Write	↕	0 to 10.000	→	1.000

These parameters are used, if necessary, to scale the analog inputs. However, this rarely proves necessary since the maximum input level (100%) automatically corresponds to the maximum value of the destination parameter. Pr **00.016** has no effect if ADI1 Mode (**00.011**) = Digital.

00.017 and 00.018	Not used

00.019 (07.009)	ADI1 Invert			
00.020 (07.013)	ADI2 Invert			
Read-Write	↕	0 or 1	→	0

These parameters are used, if necessary, to invert the input signal.

00.021 and 00.022	Not used

00.023 (07.014)	ADI2 Destination			
Read-Write	↕	0.000 to 30.999	→	0.000

Defines the output parameter (destination) for ADI2 which is pre-configured as a digital input (terminal 4).

As an example, find below parameters that could be set in Pr **00.023** if required.

Pr	Description
10.032	External trip
10.033	Drive reset

NOTE

By default, no destination parameter is assigned.

If Pr **00.014** is set to 'Therm Short Cct', 'Thermistor' or 'Therm No Trip', the ADI2 is function forced to be a thermistor input. Thus the setting of Pr **00.023** is not active. To be able to use Pr **00.023,** Pr **00.014** should be set to 'An/Dig input'.

00.024 (07.020)	ADIO3 Output Scaling			
Read-Write	↕	0.000 to 40.000	→	1.000

This parameter is used, if necessary, to scale the analog output. However, this rarely proves necessary since the maximum output level (100%) automatically corresponds to the maximum value of the source parameter.

CAUTION

Pr 00.024 should remain at 1.000 if Pr 00.025 Output Control is set to 16 (LED management).

00.025 (07.057)	ADIO3 Output Control			
Read-Write	↕	0 to 16	→	16

This parameter offers a simple way to change the source function of the ADIO3 output.

• If Pr 00.025 = 0 to 15

Value	ADIO3 Source	Description
0	**00.000**	User defined by Pr **00.027** (no LED management). No source assigned by default
1	**02.001**	Post Ramp frequency reference
2	**00.082**	Pre Ramp frequency reference
3	**00.087**	Motor rpm
4	**00.088**	Current Magnitude
5	**-**	Reserved
6	**04.020**	Percentage load. Gives Pr **00.089(04.002)** Torque Producing Current as a percentage.
7	**00.089**	Torque producing current
8	**00.086**	Voltage output
9	**00.084**	DC bus voltage
10	**00.094**	Analogue Input 1
11	**00.095**	Analogue Input 2
12	**05.003**	Power output
13	**04.018**	Current limit
14	**04.008**	Torque reference
15	**-**	Reserved

• If Pr 00.025 = 16

ADIO3 is used to control the illumination of the 3 LED's on flange option if fitted.

The **Red LED** is illuminated if the drive is in a trip state, flashes if the drive is running with an alarm condition, and is off if the drive is healthy and not in an alarm condition.

The **Green LED** is illuminated if the input supply is healthy, flashes if the input supply is healthy and the drive output is active, and is off if the incoming supply is not healthy.

The **Yellow LED** is user defined and can be used to indicate any parameter by setting Pr **00.027**.

To know the output voltage value for the defined LED states, please see Pr **00.029**.

For more information about LED management, refer to *section 3.5, page 12*.

00.026 (08.022)	DI2 Destination			
Read-Write	↕	0.000 to 30.999	→	• ID300: 06.038 • ID302: 0.000

This parameter defines the input (destination) parameter for digital input 2.

As an example, find below parameters that could be set in Pr **00.026** if required.

Pr	Description
10.032	External trip
10.033	Drive reset

NOTE

For the Commander ID300, this input is assigned to the user enable function (Pr **06.038**) by default , and is not assigned for Commander ID302.

00.027 (07.019)	ADIO3 Yellow LED Source			
Read-Write	↕	0.000 to 30.999	→	0.000

This parameter defines the output (source) parameter that activates yellow LED.

As an example, find below parameters that could be set in Pr **00.027** if required.

Pr	Description
06.029	Hardware enable
10.003	Zero frequency
10.006	At frequency
10.009	Current limit active

00.028 (08.024)	DI4 Destination			
Read-Write	↕	0.000 to 30.999	→	06.032

This parameter defines the input (destination) parameter for digital input 4.

As an example, find below parameters that could be set in Pr **00.028** if required.

Pr	Description
10.032	External trip
10.033	Drive reset

NOTE

By default, this input is assigned to the Run Reverse function (Pr **06.032**). If necessary it can be disabled by setting Pr **00.028** to 0.000.

00.029 (07.003)	ADIO3 Output State			
Read-Only	↕	± 100.00 %	→	-

ADIO3 is used to control the illumination of the 3 LED's on flange option if fitted (Red, Green and Yellow LEDs). Pr **00.029** displays the level of the analog signal.

NOTE

By default, Yellow LED is not active. See Pr **00.027** if required.

For more information about LED management, refer to *section 3.5, page 12*.

5.6.12 - Pump: Pump application (Commander ID300 only)

• Pump application description
Main functions required by a pump application with pressure regulation (constant pressure / variable flow).

• Control connections required

Pump with One Back Up Pump (default)

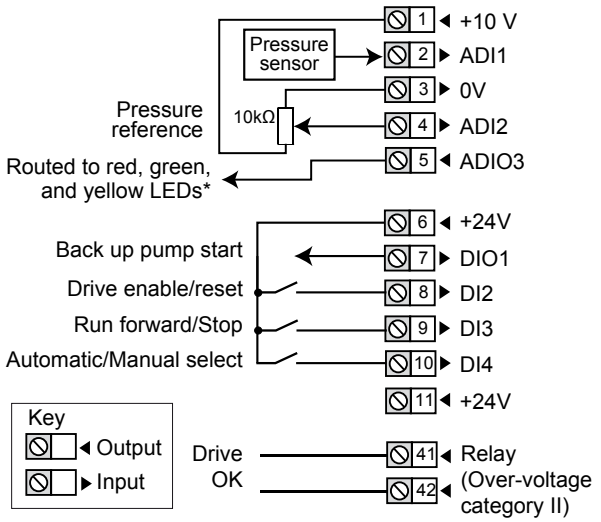

CAUTION
• This configuration description matches Pump Solution program n° 74000100 with program version equal or higher than V01.01.00, and needs the use of a keypad option (ID-SIZEx-Keypad or Field Keypad RTC) or Connect software. For information, this program uses some Menu 18 parameters.
• Pump configuration is not available with Commander ID302 (dedicated to Process applications only).

*** Some connections are not necessary in the following cases:**
- If there are LEDs on side flange option, ADIO3 is already connected to them but yellow LED has no function by default. If needed, user defined functions can be set with Pr **07.019** (see *section 3.5, page 12*).

• Pump configuration operation
On a Run command, PID is enabled to regulate the pressure. If feedback pressure is higher than 110% of the pressure reference or if the pump operates at minimum frequency during a defined delay, the system is in overpressure state.
The pump and the regulation are stopped, and the system will start again only if the pressure falls below a defined threshold or if it is less than 90% of the pressure reference.
After a Run command, if the pressure feedback does not pass over a defined threshold during 10 seconds, the pump is considered in pump-off condition. The drive will trip "External trip 3" and will need a drive reset.
Overpressure or pump-off condition thresholds are adjustable.

By default, pressure sensor signal is 4-20 mA and pressure reference signal is 0-10V. To connect the pressure sensor, refer to the supplier manual.

DI4	Selection
Open	Automatic mode, pressure regulation
Closed	Manual mode, frequency regulation

• Back-up pump management
Back up pump management allows the system to start one or few additional pumps (up to 3) in order to maintain a constant pressure on a high flow demand. The pressure regulation is still controlled by the Commander ID300, and the back up pumps run at a fixed speed.
By default, Pump program allows one back-up pump management and DIO1 is used to start it.

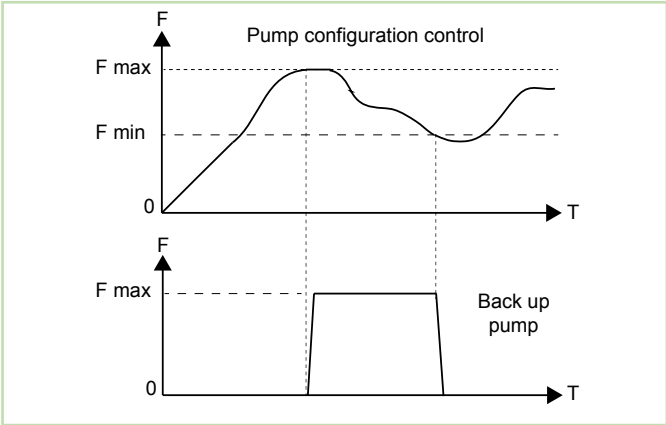

• Principle

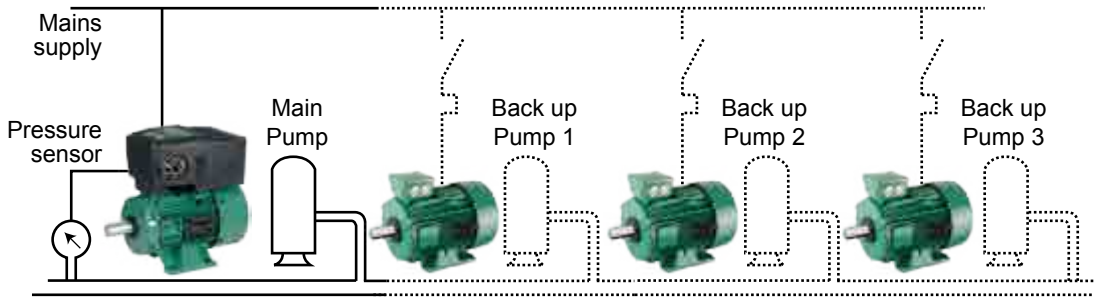

• Parameter list dedicated to this configuration

Parameter		Function	Range	Default value
Menu 0	Adv. menu			
00.011	18.026	Hydraulic Circuit Filling	0 to 100%	0
00.012	18.020	Numerical Pressure Reference 1	0.000 to Pr **00.021**	25 (1/10^{e} bar)
00.013	18.022	Restart Pressure	0.000 to Pr **00.021**	20 (1/10^{e} bar)
00.014	18.013	Regulation Hysteresis	0 to 1000%	10%
00.015	18.015	Overpressure Delay	0 to 1000 s	25 s
00.016	18.014	Pump-off Condition Threshold	0 to 30000 (1/10^{e} bar)	15 (1/10^{e} bar)
00.017	18.018	Minimum Speed	0 to 100%	80%
00.018	01.022	Manual Frequency	± VM_SPEED_ FREQ_REF Hz	50 Hz
00.019	14.010	PID Proportional Gain	0.000 to 4.000	1
00.020	14.011	PID Integral Gain	0.000 to 4.000	0.5
00.021	18.023	Maximum Value of the Pressure	0 to 30000 (1/10^{e} bar)	100 (1/10^{e} bar)
00.022	18.039	Restart Mode	0 or 1	1
00.023	18.037	Analog/ Numerical Reference Select	0 or 1	1
00.024	18.016	Number of Back-up Pumps	0 to 3	0
00.025	05.042	Reverse Output Phase Sequence	0 or 1	0
00.026	18.027	Pump-off condition delay	0 to 1000s	10s
00.027	07.007	ADI1 Mode	4-20mA Stop(-6), 20-4mA Stop (-5), 4-20mA Low (-4), 20-4mA Low (-3), 4-20mA Hold (-2), 20-4mA Hold (-1), 0-20mA (0), 20-0mA (1), 4-20mA Trp (2), 20-4mA Trp (3), 4-20mA (4), 20-4mA (5), Voltage (6), Digital (7)	4-20mA Trp (2)
00.028	20.029	Pump Program Version 1	-2147483648 to 2147483647	-
00.029	20.030	Pump Program Version 2	-2147483648 to 2147483647	-

• Additional parameters for more than one back up pump management

Adv. menu Parameter	Function	Range	Default value
18.024	Delay Before Back Up Pump Start	0 to 32 s	2 s
18.025	Delay Before Back Up Pump stop	0 to 32 s	2 s
18.042	Second Back Up Pump Command	0 or 1	0
18.043	Third Back Up Pump Command	0 or 1	0

NOTE

Parameters Pr **18.042** and **18.043** can be assigned to digital outputs from the I/O expansion option (ID-SIZE1-I/O or SI-I/O module).

• More details

- It is recommended to use drive relay (Drive OK) to stop the back up pump as soon as a trip occurs.
- When flow fluctuations are significant (e.g cleaning station), it can be useful to disable overpressure detection to stop back up pumps. Minimum frequency detection can stop them. Set Pr **18.031** = 1 to disable the overpressure.
- When more than one back up pump are used, the intelligent Pump configuration starts/stops pumps so that the wear is equally distributed over the pumps.
- A numerical pressure can be used by setting Pr **00.023**(**18.037**) to 0. If needed, two numerical pressure references 1 and 2 can be used and selected by Pr **18.036**. If Pr **18.036** is set to 0, this is Pr **00.012**(**18.020**) Numerical pressure reference 1 which is selected and if it is set to 1, this is Pr **18.021** Numerical pressure reference 2 which is selected.
  In manual mode, it is possible to use a numerical frequency by setting Pr **00.023** = 0. Then the numerical frequency can be set in Pr **00.018**.
- Dedicated trip "External Trip 3": this trip is generated when the pump is in pump-off condition (pressure equal or below the Pump-off condition threshold Pr **00.016**(**18.014**), during the delay set in Pr **00.023**(**18.027**) which is 10 seconds by default). To reset the trip, check sensor cabling, pump-off condition threshold setting in Pr **00.016**. In the case pump-off condition threshold is incompatible with the application, disable this trip by setting Pr **18.019** = 0.
  CAUTION: This trip will be then permanently disabled.

• Parameter diagram for more advanced commissioning

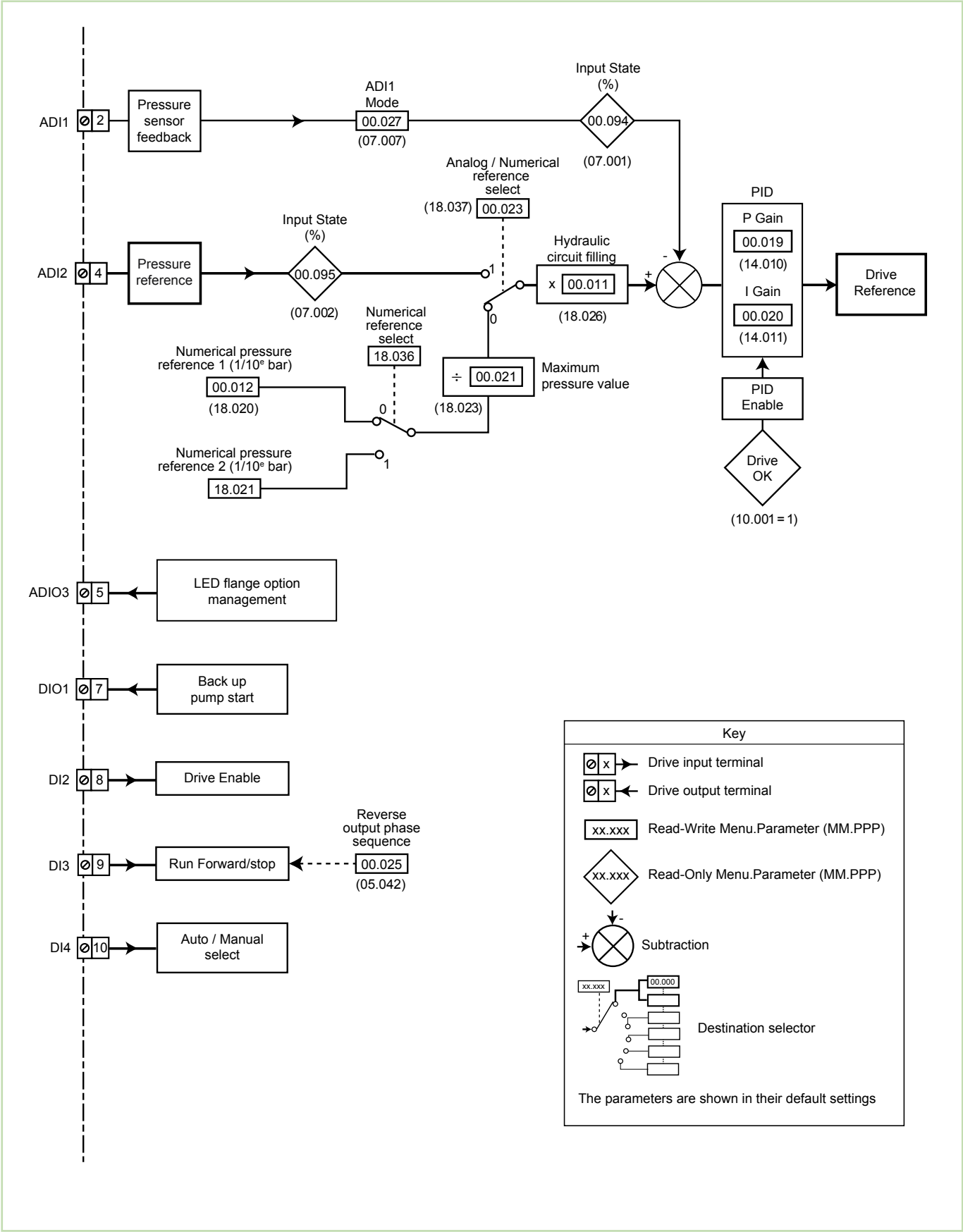

* See *section 3.5, page 12* for details.

• **Run and pump-off trip management logic diagrams**

Run command management

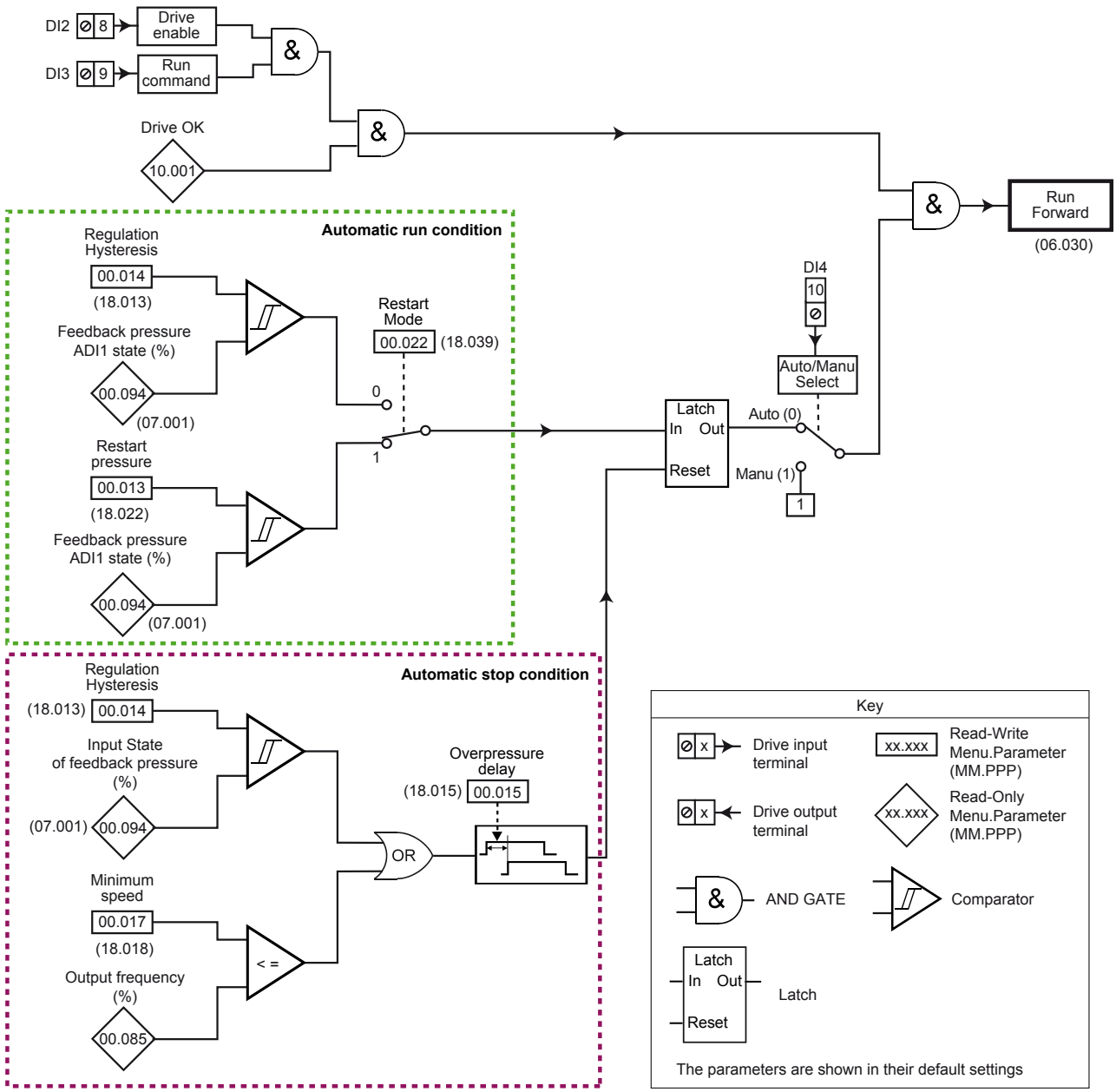

Pump-off trip management

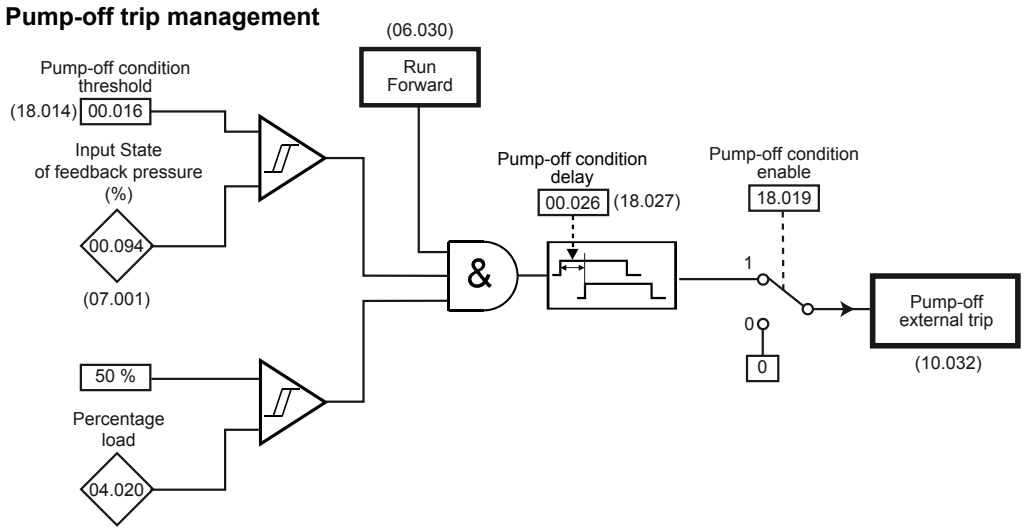

• FOR A QUICK COMMISSIONING (FROM DEFAULT SETTINGS)

Before power up, ensure...

- The drive control connections are made, as shown in the control connection diagram
- The drive is disabled (terminal 8 is open)
- Run command is not enabled (terminal 9 open)

Power up the drive and select Pump configuration

- Set Pr **00.005** to "Pump"
- If the drive trips "An Input 1 Loss", refer to section 7.2

Pressure sensor type

- Set Pr **00.027** to the required value according to sensor type (4-20mA or 20-4 mA with stop on loss, 0-20mA or 20-0mA with trip on loss, voltage, etc). To know all available modes, refer to parameter list on next page.
- If the drive trips "An Input 1 Loss", refer to section 7.2

Rotation direction test of the pump in manual mode

- Unable the drive by closing terminal 8
- Close terminal 10 to select manual mode
- Give a Run forward command by closing terminal 9, and tune the potentiometer to increase the reference.
- Check the rotation direction of the pump (usually 2 or 3 seconds are sufficient)
- Open terminal 9 to stop the pump

Is the rotation direction OK?

Yes

No → Set Pr **00.025** to 1 to change direction of rotation

Pressure scaling

- Set Pr **00.021** to the maximum pressure value ($1/10^e$ bar)
- Example: For a sensor 0-10 bars, set 100 in Pr **00.021**.

Sensor feedback test

- Read the percentage of the analog signal in Pr **00.094**
- Ensure the drive is enabled (terminal 8 closed) and in manual mode (terminal 10 closed)
- Close terminal 9 to give a Run command
- Check that the value of Pr **00.094** follows the fluctuations of sensor feedback. Then close terminal 9 to stop the motor.

CAUTION

If the value of Pr 00.094 does not change during 10 sec., the drive trips "External trip 3" (normal trip if the pump is in pump-off condition). For more details about this trip, refer to next page.

Pressure reference choice

To choose the pressure reference source, set Pr **00.023** as required:

- Pr **00.023** = 0: Numerical value to be set in Pr **00.012** ($1/10^e$ bar)
- Pr **00.023** = 1: Voltage analog signal (0-10V) from the potentiometer connected to ADI2 (terminal 4). 10 V will match with the maximum value of the signal, previously set in Pr **00.021** ($1/10^e$ bar). The value read in Pr **00.095** should evolve between 0 and 100%, proportionally to the voltage analog input value.

NOTE

In manual mode, this is a frequency reference.

A

A

No flow condition setting

- In the case the pump needs to be stopped on no flow condition, the Pump configuration allows an automatic stop of the pump. The stop occurs after a delay set by the user, and when the feedback pressure is above the reference pressure upper threshold or if the pump stays at minimum speed.
- Pr **00.015** sets the delay before stopping the pump (seconds)
- Pr **00.014** sets the hysteresis which is added to the pressure reference to determine the overpressure threshold (%). For example, if pressure reference = 2.5 bars and Pr **00.014** is set to 10, then overpressure threshold will be 2.75 bars.
- Pr **00.017** sets the minimum running frequency of the pump as a percentage of maximum frequency Pr **00.002**. For example, if Pr **00.017** = 80 %, the minimum frequency will be 40 Hz by default.

CAUTION

This setting is important as a too large value will cause lots of pump stops. Similarly, a too small value can damage the pump. To avoid such conditions, set Pr 00.017 to 10%, read drive frequency in Pr 00.085 when the flow is low or equal to zero (e.g close a valve at the pump discharge). Then set Pr 00.017 as follows:

$$\text{Pr } \mathbf{00.017} = \frac{(\text{Pr } \mathbf{00.085} + 3\text{Hz}) \times 100}{\text{Pr } \mathbf{00.002}} \ (\%)$$

Automatic pump restart when flow increases

The starting threshold depends of the value of Pr **00.022**. By default, it is set to 1.

- Pr **00.022** = 1: the pump restarts only if pressure feedback is below the threshold set in Pr **00.013**.
- Pr **00.022** = 0: the pump restarts only if pressure feedback is below the under-pressure threshold set with the hysteresis Pr **00.014** (this threshold automatically adjusts depending of the signal level).

NOTE

The regulation hysteresis Pr **00.014** has already been set previously to determine the overpressure threshold.
For example, if Pr **00.014** = 10% and pressure reference is 2.5 bars , under-pressure threshold will be at 2.25 bars.

Hydraulic circuit filling when flow is zero

A pressure offset can be added to the reference to decrease the number of restartings.

- Set Pr **00.011** as a percentage of the pressure reference.

Back-up pump management (if needed)

To enable one back-up pump functionality, set Pr **00.024** to 1.

Running in regulation mode

- Open terminal 10 to select automatic mode
- Close terminal 9 to run the drive
- Set Pr **00.019** Proportional gain (recommended setting = 2) and Pr **00.020** Integral gain (recommended setting = 2) to improve the dynamic of the regulation.

• **Parameter explanation**

00.011 (18.026)	Hydraulic Circuit Filling			
Read-Write	↕	0 to 100%	→	0

This parameter defines the pressure offset that can be added to the reference to decrease the number of restartings. Set Pr **00.011** as a percentage of the pressure reference.

00.012 (18.020)	Numerical Pressure Reference 1			
Read-Write	↕	0 to Pr **00.021**	→	25 (1/10^e bar)

The pressure can be set from a numerical reference instead of an analog signal. For this, set the required numerical value in Pr **00.012**.

00.013 (18.022)	Restart Pressure			
Read-Write	↕	0 to Pr **00.021**	→	20 (1/10^e bar)

When Pr **00.022** Restart Mode is set to 1, the pump will only restart if pressure feedback is below the threshold set in Pr **00.013** .

00.014 (18.013)	Regulation Hysteresis			
Read-Write	↕	0 to 1000 %	→	10 %

This parameter sets the hysteresis which is added to the pressure reference to determine the overpressure and under-pressure threshold (%).

For example, if pressure reference = 2.5 bars and Pr **00.014** is set to 10, then overpressure threshold will be 2.75 bars et under-pressure threshold will be 2.25 bars.

00.015 (18.015)	Overpressure Delay			
Read-Write	↕	0 to 1000 s	→	25 s

This parameter sets the delay before stopping the pump.

00.016 (18.014)	Pump-off Condition Threshold			
Read-Write	↕	0 to 30000 (1/10^e bar)	→	15 (1/10^e bar)

Sets the pressure threshold which generates the trip "External Trip 3" when the pump is considered in pump-off condition.

00.017 (18.018)	Minimum Speed			
Read-Write	↕	0 to 100 %	→	80 %

This parameter sets the minimum running frequency of the pump as a percentage of maximum frequency Pr **00.002**.

For example, if Pr **00.017** = 80 %, the minimum frequency will be 40 Hz by default.

00.018 (01.022)	Manual Frequency			
Read-Write	↕	± VM_SPEED_FREQ_REF Hz	→	50 Hz

This parameter sets the frequency when manual mode and numerical reference are selected for frequency regulation (terminal 10 closed), analog/numerical reference select Pr **00.023** = 0.

00.019 (14.010)	PID Proportional Gain			
Read-Write	↕	0.000 to 4.000	→	1.000

This is the proportional gain applied to the PID error.

00.020 (14.011)	PID Integral Gain			
Read-Write	↕	0.000 to 4.000	→	0.500

This is the integral gain applied to the PID error.

00.021 (18.023)	Maximum Value of the Pressure			
Read-Write	↕	0 to 30000 (1/10^e bar)	→	100 (1/10^e bar)

This parameter sets the maximum pressure value.

00.022 (18.039)	Restart Mode			
Read-Write	↕	0 or 1	→	1

This parameter allows 2 levels of threshold to automatically restart the pump.
If Pr **00.022** = 1, the pump restarts only if pressure feedback is below the threshold set in Pr **00.013**.
If Pr **00.022** = 0, the pump restarts only if pressure feedback is below the under-pressure threshold set with the hysteresis Pr **00.014** (this threshold automatically adjusts depending of the signal level).

00.023 (18.037)	Analog/Numerical Reference Select			
Read-Write	↕	0 or 1	→	1

If numerical pressure reference is needed instead of an analog one, set Pr **00.023** to 0 and the required pressure value in Pr **00.012** .

NOTE

If needed, two numerical pressure references 1 and 2 can be used and selected by Pr **18.036**. If Pr **18.036** is set to 0, this is Pr **00.012** Numerical pressure reference 1 which is selected and if it is set to 1, this is Pr **18.021** Numerical pressure reference 2 which is selected.

00.024 (18.016)	Number of Back-up Pumps			
Read-Write	↕	0 to 3	→	0

This parameter sets the number of back-up pumps of the application. In the case there is one back-up pump only (Pr **00.024** = 1), DIO1 output is pre-configured as an output to start the back-up pump when needed.

00.025 (05.042)	Reverse Output Phase Sequence			
Read-Write	↕	0 or 1	→	0

After the rotation direction test (performed in manual mode), if the direction is not correct, set Pr **00.025** to 1.

00.026 (08.022)	Pump-off condition delay			
Read-Write	↕	0 to 1000s	→	10s

This parameter defines the delay before which the drive trips on "External trip 3". This trip is generated when the pressure is equal or below the Pump-off condition threshold Pr **18.014**(**00.016**).

00.027 (07.007)	ADI1 Mode			
Read-Write	↕	See table below	→	4-20mA Trp

The table below gives all the possible input modes.

Value	Mode	Function
-6	4-20mA Stop	4-20mA or 20-4 mA signal with stop on current loss (1)
-5	20-4mA Stop	
-4	4-20mA Low	4-20mA or 20-4 mA signal with switching to equivalent of 4mA input current on current loss (1)
-3	20-4mA Low	
-2	4-20mA Hold	4-20mA or 20-4 mA signal with hold at level before loss on current loss (1)
-1	20-4mA Hold	
0	0-20mA	0-20mA or 20-0mA signal
1	20-0mA	
2	4-20mA Trp	4-20mA or 20-4 mA signal with 'An Input 1 or 2 Loss' trip on current loss (1)
3	20-4mA Trp	
4	4-20mA	4-20mA or 20-4 mA signal with no action on current loss (1)
5	20-4mA	
6	Voltage	Voltage signal
7	Digital	Digital

(1) Current loss: the current is below 3mA.

00.028 (20.029)	Pump Program Version 1			
Read-Only	↕	± 31 bits	→	-

Shows the pump program version 1.

00.029 (20.030)	Pump Program Version 2			
Read-Only	↕	± 31 bits	→	-

Shows the pump program version 2.

6 - ADVANCED MENUS

Advanced menus are suitable when user menu (menu 0) is not enough to set the application.
For all details about parameter explanations, please refer to the Parameter Reference Guide(www.commanderID300.info).

6.1 - Parameter ranges and Variable minimum/maximums

The descriptions below define the variable minimum/maximum values that can be used with VM format of parameter ranges. The variable minimum and maximum themselves can be dependent on other parameters, or the drive rating or other conditions as defined.

Identifier	VM_AC_VOLTAGE
Description	Range applied to parameters showing AC voltage
Units	V
Range of [MIN]	0
Range of [MAX]	0 to 650

VM_AC_VOLTAGE[MAX] is drive voltage rating dependent. See the table below.

Voltage level	200V	400V
VM_AC_ VOLTAGE[MAX]	325	650

Identifier	VM_AC_VOLTAGE_SET
Description	Range applied to AC voltage set-up parameters
Units	V
Range of [MIN]	0
Range of [MAX]	0 to 480

VM_AC_VOLTAGE_SET[MAX] is drive voltage rating dependent. See the table below.

Voltage level	200V	400V
VM_AC_VOLTAGE_SET[MAX]	240	480

Identifier	VM_ACCEL_RATE
Description	Maximum applied to the ramp rate parameters
Units	s/100Hz, s/MaxFrequency
Range of [MIN]	0.0
Range of [MAX]	0.0 to 32000.0

A maximum needs to be applied to the ramp rate parameters because the units are a time for a change of speed from zero to a defined level or to maximum speed. If the change of speed is to the maximum speed then changing the maximum speed changes the actual ramp rate for a given ramp rate parameter value. The variable maximum calculation ensures that longest ramp rate (parameter at its maximum value) is not slower than the rate with the defined level, i.e. 32000.0 s/100Hz.
The maximum frequency is taken from Maximum Reference Clamp Pr **01.006/00.002** (or M2 Maximum Reference Clamp Pr **21.001** if Select Motor 2 Parameters Pr **11.045** = 1).

If Ramp Rate Units Pr **02.039** = 0:
VM_ACCEL_RATE[MAX] = 32000.0
Otherwise: VM_ACCEL_RATE[MAX] = 32000.0 x Maximum frequency / 100.00

Identifier	VM_DC_VOLTAGE
Description	Range applied to DC voltage parameters
Units	V
Range of [MIN]	0
Range of [MAX]	0 to 990

VM_DC_VOLTAGE[MAX] is the full scale DC link voltage feedback for the drive. This level is drive voltage rating dependent. See the table below.

Voltage level	200V	400V
VM_DC_ VOLTAGE[MAX]	440V	990V

Identifier	VM_DC_VOLTAGE_SET
Description	Range applied to DC voltage reference parameters
Units	V
Range of [MIN]	0
Range of [MAX]	0 to 900

VM_DC_VOLTAGE_SET[MAX] is drive voltage rating dependent. All values are shown in the table below.

Voltage level	200V	400V
VM_DC_VOLTAGE_ SET[MAX]	415V	900V

Identifier	VM_DRIVE_CURRENT
Description	Range applied to parameters showing current in A
Units	A
Range of [MIN]	-9999.99 to 0.00
Range of [MAX]	0.00 to 9999.99

VM_DRIVE_CURRENT[MIN] = - VM_DRIVE_CURRENT[MAX]

VM_DRIVE_CURRENT[MAX] is equivalent to the full scale (over current trip level) for the drive and is given by Full Scale Current Kc (**11.061**).

Identifier	VM_FREQ
Description	Range applied to parameters showing frequency
Units	Hz
Range of [MIN]	-300.00
Range of [MAX]	300.00

This variable minimum/maximum defines the range of speed monitoring parameters. To allow headroom for overshoot the range is set to twice the range of the speed references.

VM_FREQ[MIN] = 2 x VM_SPEED_FREQ_REF[MIN]

VM_FREQ[MAX] = 2 x VM_SPEED_FREQ_REF[MAX]

Identifier	VM_MAX_SWITCHING_ FREQUENCY
Description	Range applied to the maximum switching frequency parameters
Units	User units
Range of [MIN]	2 (2kHz)
Range of [MAX]	8 (16kHz)

VM_SWITCHING_FREQUENCY[MAX] = Power stage dependent.

Identifier	VM_MOTOR1_CURRENT_LIMIT
Description	Range applied to current limit parameters (motor 1)
Units	%
Range of [MIN]	0.0
Range of [MAX]	0.0 to 1000.0

VM_MOTOR1_CURRENT_LIMIT[MAX] = $(I_{Tlimit} / I_{Trated}) \times 100\%$

Where:

$I_{Tlimit} = I_{max} \times \cos(\sin^{-1}(I_{Mrated} / I_{max}))$

I_{Mrated} = Pr **05.007** x sin φ

I_{Trated} = Pr **05.007** x cos φ

cos φ = Pr **05.010**

I_{max} is (Overload x Pr **11.061** / 2.2) when the motor rated current set in Pr **05.007** is less than or equal to Pr **11.032**, otherwise it is the lower of (Overload x Pr **11.061** / 2.2) or 1.1 x Pr **11.060**.

Overload = 1.75 for open-loop.

Identifier	VM_MOTOR2_CURRENT_LIMIT
Description	Range applied to current limit parameters (motor 2)
Units	%
Range of [MIN]	0.0
Range of [MAX]	0.0 to 1000.0

VM_MOTOR2_CURRENT_LIMIT[MAX] is dependent on the drive rating and motor set-up parameters.

Refer to VM_MOTOR1_CURRENT_LIMIT for description.

Identifier	VM_NEGATIVE_REF_CLAMP1
Description	Limits applied to the negative frequency clamp (motor 1)
Units	Hz
Range of [MIN]	-150.00 to 0.00
Range of [MAX]	0.00 to 150.00

This variable maximum/minimum defines the range of the negative frequency clamp associated with motor map 1 (Minimum Reference Clamp Pr **01.007/00.001**). The minimum and maximum are affected by the settings of the Negative Reference Clamp Enable Pr **01.008**, Bipolar Reference Enable Pr **01.010/00.034** and Maximum Reference Clamp Pr **01.006/00.002** as shown in the table below.

Negative Reference Clamp Enable (Pr **01.008**)	Bipolar Reference Enable (Pr **01.010 /00.034**)	VM_ NEGATIVE_ REF_ CLAMP1[MIN]	VM_ NEGATIVE_ REF_ CLAMP1[MAX]
0	0	0.00	Pr **01.006 /00.002**
0	1	0.00	0.00
1	0 or 1	-VM_ POSITIVE_ REF_ CLAMP[MAX]	0.00

Identifier	VM_NEGATIVE_REF_CLAMP2
Description	Limits applied to the negative frequency reference clamp (motor 2)
Units	Hz
Range of [MIN]	-150.00 to 0.00
Range of [MAX]	00.00 to 150.00

This variable maximum/minimum defines the range of the negative frequency clamp associated with motor map 2 (M2 Minimum Reference Clamp Pr **21.002**). It is defined in the same way as VM_NEGATIVE_REF_CLAMP1 except that the M2 Maximum Reference Clamp Pr **21.001** is used instead of Maximum Reference Clamp Pr **01.006**.

Identifier	VM_POSITIVE_REF_CLAMP
Description	Limits applied to the positive frequency reference clamp
Units	Hz
Range of [MIN]	0.00
Range of [MAX]	150.00

VM_POSITIVE_REF_CLAMP[MAX] defines the range of the positive reference clamps, Maximum Reference Clamp Pr **01.006** and M2 Maximum Reference Clamp Pr **21.001**, which in turn limits the references.

Identifier	VM_POWER
Description	Range applied to parameters that either set or display power
Units	kW
Range of [MIN]	-9999.99 to 0.00
Range of [MAX]	0.00 to 9999.99

VM_POWER[MIN] = -VM_POWER[MAX]

VM_POWER[MAX] is rating dependent and is chosen to allow for the maximum power that can be output by the drive with maximum AC output voltage, at maximum controlled current and unity power factor.

VM_POWER[MAX] = √3 x VM_AC_VOLTAGE[MAX] x VM_DRIVE_CURRENT[MAX] / 1000

Identifier	VM_RATED_CURRENT
Description	Range applied to rated current parameters
Units	A
Range of [MIN]	0.00
Range of [MAX]	0.00 to 9999.99

VM_RATED_CURRENT [MAX] = Maximum Rated Current Pr **11.060** and is dependent on the drive rating.

Identifier	VM_SPEED_FREQ_REF
Description	Range applied to the frequency reference parameters
Units	Hz
Range of [MIN]	-150.00 to 0.00
Range of [MAX]	0.00 to 150.00

This variable minimum/maximum is applied throughout the frequency and speed reference system so that the references can vary in the range from the minimum to maximum clamps.

VM_SPEED_FREQ_REF[MIN] = -VM_SPEED_FREQ_REF[MAX].

Negative Reference Clamp Enable (Pr 01.008)	VM_SPEED_FREQ_REF[MAX] if Select Motor 2 Parameters (Pr 11.045 = 0)	VM_SPEED_FREQ_REF[MAX] if Select Motor 2 Parameters (Pr 11.045 = 1)
0	Maximum Reference Clamp Pr **01.006**	M2 Maximum Reference Clamp Pr **21.001**
1	Maximum Reference Clamp Pr **01.006** or |Minimum Reference Clamp Pr **01.007**| whichever the larger	M2 Maximum Reference Clamp Pr **21.001** or |M2 Minimum Reference Clamp Pr **21.002**| whichever the larger

Identifier	VM_SPEED_FREQ_REF_ UNIPOLAR
Description	Unipolar version of VM_SPEED_ FREQ_REF
Units	Hz
Range of [MIN]	0.00
Range of [MAX]	0.00 to 150.00

VM_SPEED_FREQ_REF_UNIPOLAR[MAX] = VM_SPEED_FREQ_REF[MAX]

Identifier	VM_SPEED_FREQ_USER_REFS
Description	Range applied to analogue reference parameters
Units	Hz
Range of [MIN]	-150.00 to 150.00
Range of [MAX]	0.00 to 150.00

This variable maximum is applied to Analogue Reference 1 Pr **01.036**, Analogue Reference 2 Pr **01.037** and Keypad Reference Pr **01.017**.
The maximum applied to these parameters is the same as other frequency reference parameters.

VM_SPEED_FREQ_USER_REFS [MAX] = VM_SPEED_FREQ_REF[MAX]

However the minimum is dependent on Negative Reference Clamp Enable Pr **01.008** and Bipolar Reference Enable Pr **01.010**.

Negative Reference Clamp Enable Pr **01.008**	Bipolar Reference Enable Pr **01.010**	VM_SPEED_FREQ_USER_ REFS[MIN]
0	0	If Select Motor 2 Parameters Pr **11.045** = 0 Minimum Reference Clamp Pr **01.007**, otherwise M2 Minimum Reference Clamp Pr **21.002**
0	1	-VM_SPEED_FREQ_ REF[MAX]
1	0	0.00
1	1	-VM_SPEED_FREQ_ REF[MAX]

Identifier	VM_SUPPLY_LOSS_LEVEL
Description	Range applied to the supply loss threshold
Units	V
Range of [MIN]	0 to 410
Range of [MAX]	0 to 990

VM_SUPPLY_LOSS_LEVEL[MIN] is drive voltage rating dependent. See the table below.

Voltage level	200V	400V
VM_SUPPLY_LOSS_ LEVEL[MIN]	205	410

VM_SUPPLY_LOSS_LEVEL[MAX] = VM_DC_VOLTAGE_SET[MAX]

Identifier	VM_TORQUE_CURRENT
Description	Range applied to torque and torque producing current parameters.
Units	%
Range of [MIN]	-1000.0 to 0.0
Range of [MAX]	0.0 to 1000.0

VM_TORQUE_CURRENT[MIN] = -VM_TORQUE_CURRENT[MAX]

Select Motor 2 Parameters Pr **11.045**	VM_TORQUE_CURRENT[MAX]
0	VM_MOTOR1_CURRENT_LIMIT[MAX]
1	VM_MOTOR2_CURRENT_LIMIT[MAX]

Identifier	VM_TORQUE_CURRENT_ UNIPOLAR
Description	Unipolar version of VM_TORQUE_ CURRENT
Units	%
Range of [MIN]	0.0
Range of [MAX]	0.0 to 1000.0

VM_TORQUE_CURRENT_UNIPOLAR[MAX] = VM_TORQUE_CURRENT[MAX]

Identifier	VM_USER_CURRENT
Description	Range applied to torque reference and percentage load parameters
Units	%
Range of [MIN]	-1000.0 to 0.0
Range of [MAX]	0.0 to 1000.0

VM_USER_CURRENT[MIN] = -VM_USER_CURRENT[MAX]

VM_USER_CURRENT[MAX] = User Current Maximum Scaling Pr **04.024**

6.2 - Advanced parameter tables

These advanced parameters are listed for reference purposes only. The lists in this chapter do not include sufficient information for adjusting these parameters. Incorrect adjustment can affect the safety of the system, and damage the drive and or external equipment. Before attempting to adjust any of these parameters, refer to the Parameter reference guide (www.commanderID300.info).

• Operation mode abbreviations:
Open-loop: Sensorless control for induction motors
RFC-A: Asynchronous Rotor Flux Control for induction motors (available soon)

• Key to parameter table coding

Coding	Attribute
RW	Read/Write: can be written by the user
RO	Read only: can only be read by the user
Bit	1 bit parameter. ‘On’ or ‘Off’ on the display
Num	Number: can be uni-polar or bi-polar
Txt	Text: the parameter uses text strings instead of numbers
Bin	Binary parameter
IP	IP Address parameter
Mac	Mac Address parameter
Date	Date parameter
Time	Time parameter
Chr	Character parameter
FI	Filtered: some parameters which can have rapidly changing values are filtered when displayed on the drive keypad for easy viewing
DE	Destination: This parameter selects the destination of an input or logic function
RA	Rating dependent: this parameter is likely to have different values and ranges with drives of different voltage and current ratings. Parameters with this attribute will be transferred to the destination drive by non-volatile storage media when the rating of the destination drive is different from the source drive and the file is a parameter file. However, the values will be transferred if only the current rating is different and the file is a difference from default type file
ND	No default: The parameter is not modified when defaults are loaded
NC	Not copied: not transferred to or from non-volatile media during copying
PT	Protected: cannot be used as a destination
US	User save: parameter saved in drive EEPROM when the user initiates a parameter save.
PS	Power-down save: parameter automatically saved in drive EEPROM when the under volts (UV) state occurs

6.2.1 - Menu 1 - Frequency references

Parameter	Designation	Range	Default	Type					
01.001	Reference Selected	±VM_SPEED_FREQ_REF Hz	-	RO	Num	ND	NC	PT	
01.002	Pre-skip Filter Reference	±VM_SPEED_FREQ_REF Hz	-	RO	Num	ND	NC	PT	
01.003	Pre-ramp Reference	±VM_SPEED_FREQ_REF Hz	-	RO	Num	ND	NC	PT	
01.004	Reference Offset	±VM_SPEED_FREQ_REF Hz	0.00 Hz	RW	Num				US
01.005	Jog Reference	0.00 to 150.00 Hz	1.50 Hz	RW	Num				US
01.006	Maximum Speed	±VM_POSITIVE_REF_CLAMP Hz	50.00 Hz (80.00 Hz for gear-motor)	RW	Num				US
01.007	Minimum Speed	±VM_NEGATIVE_REF_CLAMP1 Hz	10.00 Hz	RW	Num				US
01.008	Negative Reference Clamp Enable	Off (0) or On (1)	Off (0)	RW	Bit				US
01.009	Reference Offset Select	0 to 2	0	RW	Num				US
01.010	Bipolar Reference Enable	Off (0) or On (1)	Off (0)	RW	Bit				US
01.011	Reference On	Off (0) or On (1)	-	RO	Bit	ND	NC	PT	
01.012	Reverse Select	Off (0) or On (1)	-	RO	Bit	ND	NC	PT	
01.013	Jog Select	Off (0) or On (1)	-	RO	Bit	ND	NC	PT	
01.014	Reference Selector	A1 A2 (0), A1 Preset (1), A2 Preset (2), Preset (3), Keypad (4), Reserved (5), Keypad Ref (6)	A1 A2 (0)	RW	Txt				US
01.015	Preset Selector	0 to 9	0	RW	Num				US
01.016	Preset Selector Timer	0.0 to 400.0 s	10.0 s	RW	Num				US
01.017	Keypad Control Mode Reference	±VM_SPEED_FREQ_USER_REFS Hz	0.00 Hz	RO	Num		NC	PT	PS
01.021	Preset Reference 1	±VM_SPEED_FREQ_REF Hz	0.00 Hz	RW	Num				US
01.022	Preset Reference 2	±VM_SPEED_FREQ_REF Hz	0.00 Hz	RW	Num				US
01.023	Preset Reference 3	±VM_SPEED_FREQ_REF Hz	0.00 Hz	RW	Num				US
01.024	Preset Reference 4	±VM_SPEED_FREQ_REF Hz	0.00 Hz	RW	Num				US
01.025	Preset Reference 5	±VM_SPEED_FREQ_REF Hz	0.00 Hz	RW	Num				US
01.026	Preset Reference 6	±VM_SPEED_FREQ_REF Hz	0.00 Hz	RW	Num				US
01.027	Preset Reference 7	±VM_SPEED_FREQ_REF Hz	0.00 Hz	RW	Num				US
01.028	Preset Reference 8	±VM_SPEED_FREQ_REF Hz	0.00 Hz	RW	Num				US
01.029	Skip Reference 1	0.00 to 150.00 Hz	0.00 Hz	RW	Num				US
01.030	Skip Reference Band 1	0.00 to 25.00 Hz	0.50 Hz	RW	Num				US
01.031	Skip Reference 2	0.00 to 150.00 Hz	0.00 Hz	RW	Num				US
01.032	Skip Reference Band 2	0.00 to 25.00 Hz	0.50 Hz	RW	Num				US
01.033	Skip Reference 3	0.00 to 150.00 Hz	0.00 Hz	RW	Num				US
01.034	Skip Reference Band 3	0.00 to 25.00 Hz	0.50 Hz	RW	Num				US
01.035	Reference In Rejection Zone	Off (0) or On (1)	-	RO	Bit	ND	NC	PT	
01.036	Analog Reference 1	±VM_SPEED_FREQ_USER_REFS Hz	0.00 Hz	RO	Num		NC		
01.037	Analog Reference 2	±VM_SPEED_FREQ_USER_REFS Hz	0.00 Hz	RO	Num		NC		
01.038	Percentage Trim	±100.00 %	0.00 %	RW	Num		NC		
01.041	Reference Select Flag 1	Off (0) or On (1)	Off (0)	RW	Bit		NC		
01.042	Reference Select Flag 2	Off (0) or On (1)	Off (0)	RW	Bit		NC		
01.043	Reference Select Flag 3	Off (0) or On (1)	Off (0)	RW	Bit		NC		
01.045	Preset Select Flag 1	Off (0) or On (1)	Off (0)	RW	Bit		NC		
01.046	Preset Select Flag 2	Off (0) or On (1)	Off (0)	RW	Bit		NC		
01.047	Preset Select Flag 3	Off (0) or On (1)	Off (0)	RW	Bit		NC		
01.048	Preset Selector Timer Reset	Off (0) or On (1)	Off (0)	RW	Bit		NC		

Parameter	Designation	Range	Default	Type					
01.049	Reference Selected Indicator	1 to 6	-	RO	Num	ND	NC	PT	
01.050	Preset Selected Indicator	1 to 8	-	RO	Num	ND	NC	PT	
01.051	Power-up Keypad Control Mode Reference	Reset (0), Last (1), Preset (2)	Reset (0)	RW	Txt				US
01.057	Force Reference Direction	None (0), Forward (1), Reverse (2)	None (0)	RW	Txt				
01.069	Reference in rpm	±VM_SPEED_FREQ_REF rpm	-	RO	Num	ND	NC	PT	
01.070	Clamped Reference	±VM_SPEED_FREQ_REF Hz	-	RO	Num	ND	NC	PT	
01.071	Alternative Reference	±VM_SPEED_FREQ_REF Hz	0.00 Hz	RO	Num		NC		
01.072	Alternative Reference Enable	Off (0) or On (1)	-	RO	Bit	ND	NC	PT	

6.2.2 - Menu 2 - Frequency ramps

Parameter	Designation	Range	Default	Type					
02.001	Post Ramp Reference	±VM_SPEED_FREQ_REF Hz		RO	Num	ND	NC	PT	
02.003	Ramp Hold	Off (0) or On (1)	Off (0)	RW	Bit				US
02.004	Ramp Mode Select	Fast (0), Standard (1), Std boost (2), Fast boost (3)	Fast (0)	RW	Txt				US
02.006	S Ramp Enable	Off (0) or On (1)	Off (0)	RW	Bit				US
02.007	Max Rate Of Change Of Acceleration	0.0 to 300.0 s²/100Hz	3.1 s²/100Hz	RW	Num				US
02.008	Standard Ramp Voltage	±VM_DC_VOLTAGE_SET V	200V drive: 375 V 400V drive:750 V	RW	Num		RA		US
02.009	Deceleration Fail Detection Disable	Off (0) or On (1)	Off (0)	RW	Bit				US
02.010	Acceleration Rate Selector	0 to 9	0	RW	Num				US
02.011	Acceleration Rate 1	±VM_ACCEL_RATE s	5.0 s	RW	Num				US
02.012	Acceleration Rate 2	±VM_ACCEL_RATE s	5.0 s	RW	Num				US
02.013	Acceleration Rate 3	±VM_ACCEL_RATE s	5.0 s	RW	Num				US
02.014	Acceleration Rate 4	±VM_ACCEL_RATE s	5.0 s	RW	Num				US
02.015	Acceleration Rate 5	±VM_ACCEL_RATE s	5.0 s	RW	Num				US
02.016	Acceleration Rate 6	±VM_ACCEL_RATE s	5.0 s	RW	Num				US
02.017	Acceleration Rate 7	±VM_ACCEL_RATE s	5.0 s	RW	Num				US
02.018	Acceleration Rate 8	±VM_ACCEL_RATE s	5.0 s	RW	Num				US
02.019	Jog Acceleration Rate	±VM_ACCEL_RATE s	0.2 s	RW	Num				US
02.020	Deceleration Rate Selector	0 to 9	0	RW	Num				US
02.021	Deceleration Rate 1	±VM_ACCEL_RATE s	10.0 s	RW	Num				US
02.022	Deceleration Rate 2	±VM_ACCEL_RATE s	10.0 s	RW	Num				US
02.023	Deceleration Rate 3	±VM_ACCEL_RATE s	10.0 s	RW	Num				US
02.024	Deceleration Rate 4	±VM_ACCEL_RATE s	10.0 s	RW	Num				US
02.025	Deceleration Rate 5	±VM_ACCEL_RATE s	10.0 s	RW	Num				US
02.026	Deceleration Rate 6	±VM_ACCEL_RATE s	10.0 s	RW	Num				US
02.027	Deceleration Rate 7	±VM_ACCEL_RATE s	10.0 s	RW	Num				US
02.028	Deceleration Rate 8	±VM_ACCEL_RATE s	10.0 s	RW	Num				US
02.029	Jog Deceleration Rate	±VM_ACCEL_RATE s	0.2 s	RW	Num				US
02.030	Acceleration Rate Selected	0 to 8	-	RO	Num	ND	NC	PT	
02.031	Deceleration Rate Selected	0 to 8	-	RO	Num	ND	NC	PT	
02.032	Acceleration Rate Select Bit 0	Off (0) or On (1)	Off (0)	RW	Bit		NC		
02.033	Acceleration Rate Select Bit 1	Off (0) or On (1)	Off (0)	RW	Bit		NC		
02.034	Acceleration Rate Select Bit 2	Off (0) or On (1)	Off (0)	RW	Bit		NC		
02.035	Deceleration Rate Select Bit 0	Off (0) or On (1)	Off (0)	RW	Bit		NC		
02.036	Deceleration Rate Select Bit 1	Off (0) or On (1)	Off (0)	RW	Bit		NC		
02.037	Deceleration Rate Select Bit 2	Off (0) or On (1)	Off (0)	RW	Bit		NC		
02.039	Ramp Rate Units	0 to 2	0	RW	Num				US
02.040	S Ramp Percentage	0.0 to 50.0 %	0.0 %	RW	Num				US
02.041	S Ramp Set-up Mode	0 to 2	0	RW	Num				US
02.042	Maximum Rate Of Change Of Acceleration 1	0.0 to 300.0 s²/100Hz	0.0 s²/100Hz	RW	Num				US
02.043	Maximum Rate Of Change Of Acceleration 2	0.0 to 300.0 s²/100Hz	0.0 s²/100Hz	RW	Num				US

Parameter	Designation	Range	Default	Type					
02.044	Maximum Rate Of Change Of Acceleration 3	0.0 to 300.0 s²/100Hz	0.0 s²/100Hz	RW	Num				US
02.045	Maximum Rate Of Change Of Acceleration 4	0.0 to 300.0 s²/100Hz	0.0 s²/100Hz	RW	Num				US

6.2.3 - Menu 3 - Frequency Monitoring and Speed Feedback

Parameter	Designation	Range	Default	Type					
03.001	Final Demand Reference	±VM_FREQ Hz	-	RO	Num	ND	NC	PT	FI
03.005	Zero Frequency Threshold	0.00 to 20.00 Hz	2.00 Hz	RW	Num				US
03.006	At Frequency Lower Limit	0.00 to 150.00 Hz	1.00 Hz	RW	Num				US
03.007	At Frequency Upper Limit	0.00 to 150.00 Hz	1.00 Hz	RW	Num				US
03.008	Over Frequency Threshold	0.00 to 150.00 Hz	0.00 Hz	RW	Num				US
03.009	Absolute At Frequency Select	Off (0) or On (1)	Off (0)	RW	Bit				US
03.022	Hard Frequency Reference	±VM_SPEED_FREQ_REF Hz	0.00 Hz	RW	Num				US
03.023	Hard Frequency Reference Select	Off (0) or On (1)	Off (0)	RW	Bit				US
03.029	Position	0 to 65535	-	RO	Num	ND	NC	PT	FI
03.032	Position Counter Reset	Off (0) or On (1)	Off (0)	RW	Bit		NC		
03.035	Position Scaling Numerator	0.000 to 1.000	1.000	RW	Num				US
03.036	Position Scaling Denominator	0.000 to 100.000	1.000	RW	Num				US
03.037	Frequency Output or PWM Output Scaling	0.000 to 4.000	1.000	RW	Num				US
03.038	Maximum Output Frequency	1 (0), 2 (1), 5 (2), 10 (3) kHz	5 (2) kHz	RW	Txt				US
03.042	Frequency Input High Precision	Off (0) or On (1)	Off (0)	RW	Bit				US
03.043	Maximum Reference Frequency	0.00 to 100.00 kHz	10.00 kHz	RW	Num				US
03.044	Frequency Reference Scaling	0.000 to 4.000	1.000	RW	Num				US
03.045	Frequency Reference	±100.00 %	-	RO	Num	ND	NC	PT	FI
03.047	Two Point Minimum Frequency	±100.00 %	-100.00 %	RW	Num				US
03.048	Drive Reference at Minimum Frequency	±100.00 %	-100.00 %	RW	Num				US
03.049	Two Point Maximum Frequency	0.00 to 100.00 %	100.00 %	RW	Num				US
03.050	Drive Reference at Maximum Frequency	0.00 to 100.00 %	100.00 %	RW	Num				US
03.072	Motor speed percent	±150.0 %	-	RO	Num	ND	NC	PT	FI
03.127	Frequency feedback	±VM_SPEED_FREQ_REF Hz	-	RO	Num	ND	NC	PT	
03.128	Revolution Counter	0 to 65535 Revs	-	RO	Num	ND	NC	PT	FI
03.134	Rotary Lines Per Revolution	512 (0), 1024 (1), 2048 (2), 4096 (3)	1024 (1)	RW	Txt				US
03.142	Encoder feedback filter	1 to 31 ms	3 ms	RW	Num				US
03.143	Maximum Frequency Feedback	±VM_SPEED_FREQ_REF Hz	50.00 Hz	RW	Num				US

6.2.4 - Menu 4 - Torque and Current control

Parameter	Designation	Range	Default	Type					
04.001	Current Magnitude	±VM_DRIVE_CURRENT A	-	RO	Num	ND	NC	PT	FI
04.002	Torque Producing Current	±VM_DRIVE_CURRENT A	-	RO	Num	ND	NC	PT	FI
04.003	Final Torque Reference	±VM_TORQUE_CURRENT %	-	RO	Num	ND	NC	PT	FI
04.004	Final Current Reference	±VM_TORQUE_CURRENT %	-	RO	Num	ND	NC	PT	FI
04.005	Motoring Current Limit	±VM_MOTOR1_CURRENT_LIMIT %	165.0 %	RW	Num		RA		US
04.006	Regenerating Current Limit	±VM_MOTOR1_CURRENT_LIMIT %	165.0 %	RW	Num		RA		US
04.007	Symmetrical Current Limit	±VM_MOTOR1_CURRENT_LIMIT %	165.0 %	RW	Num		RA		US
04.008	Torque Reference	±VM_USER_CURRENT %	0.0 %	RW	Num				US
04.011	Torque Mode Selector	0 or 1	0	RW	Num				US
04.013	Current Controller Kp Gain	0.00 to 4000.00	20.00	RW	Num				US
04.014	Current Controller Ki Gain	0.000 to 600.000	40.000	RW	Num				US
04.015	Motor Thermal Time Constant 1	1 to 3000 s	179 s	RW	Num				US
04.016	Thermal Protection Mode	00 to 11	00	RW	Bin				US
04.017	Magnetising Current	±VM_DRIVE_CURRENT A	-	RO	Num	ND	NC	PT	FI
04.018	Final Current Limit	±VM_TORQUE_CURRENT %	-	RO	Num	ND	NC	PT	
04.019	Motor Protection Accumulator	0.0 to 100.0 %	-	RO	Num	ND	NC	PT	PS
04.020	Percentage Load	±VM_USER_CURRENT %	-	RO	Num	ND	NC	PT	FI
04.024	User Current Maximum Scaling	±VM_TORQUE_CURRENT_ UNIPOLAR %	165.0 %	RW	Num		RA		US
04.025	Low Frequency Thermal Protection Mode	0 or 1	0	RW	Num				US
04.036	Motor Protection Accumulator Power-up Value	Power down (0), Zero (1), Real time (2)	Power down (0)	RW	Txt				US
04.041	User Over Current Trip Level	0 to 100 %	100 %	RW	Num		RA		US

6.2.5 - Menu 5 - Motor Control

Parameter	Designation	Range	Default	Type					
05.001	Output Frequency	±VM_SPEED_FREQ_REF Hz	-	RO	Num	ND	NC	PT	FI
05.002	Output Voltage	±VM_AC_VOLTAGE V	-	RO	Num	ND	NC	PT	FI
05.003	Output Power	±VM_POWER kW	-	RO	Num	ND	NC	PT	FI
05.004	Motor Rpm	± 9000 rpm	-	RO	Num	ND	NC	PT	FI
05.005	D.c. Link Voltage	±VM_DC_VOLTAGE V	-	RO	Num	ND	NC	PT	FI
05.006	Motor Rated Frequency	0.00 to 150.00 Hz	50.00 Hz	RW	Num				US
05.007	Motor Rated Current	±VM_RATED_CURRENT A	0.00 A	RW	Num		RA		US
05.008	Motor Rated Speed	0.0 to 9000.0 rpm	1500.0 rpm	RW	Num				US
05.009	Motor Rated Voltage	0 to VM_AC_VOLTAGE_SET V	200V drive: 230 V 400V drive: 400 V	RW	Num		RA		US
05.010	Motor Rated Power Factor	0.00 to 1.00	0.85	RW	Num		RA		US
05.011	Number Of Motor Poles	Automatic (0) to 32 (16) Poles	Automatic (0)	RW	Txt				US
05.012	Auto-tune	0 to 2	0	RW	Num		NC		
05.013	Dynamic V To F Select	0 to 1	1	RW	Num				US
05.014	Open-loop Voltage Mode	Ur S (0), Ur (1), Fixed (2), Ur Auto (3), Ur I (4), Square (5), Fixed Tapered (6)	Ur I (4)	RW	Txt				US
05.015	Low Frequency Voltage Boost	0.0 to 25.0 %	3.0 %	RW	Num				US
05.017	Stator Resistance	0.0000 to 99.9999 Ω	0.0000 Ω	RW	Num		RA		US
05.018	Maximum Switching Frequency	±VM_MAX_SWITCHING_ FREQUENCY kHz	3 (3) kHz	RW	Txt		RA		US
05.019	High Stability Space Vector Modulation	Off (0) or On (1)	Off (0)	RW	Bit				US
05.020	Over Modulation Enable	Off (0) or On (1)	Off (0)	RW	Bit				US
05.024	Transient Inductance	0.000 to 500.000 mH	0.000 mH	RW	Num		RA		US
05.025	Stator Inductance	0.00 to 5000.00 mH	0.00 mH	RW	Num		RA		US
05.027	Slip Compensation Level	±150.0 %	100.0 %	RW	Num				US
05.028	Flux Control Compensation Disable	Off (0) or On (1)	Off (0)	RW	Bit				US
05.031	Voltage Controller Gain	1 to 30	1	RW	Num				US
05.032	Torque Per Amp	0.00 to 500.00 Nm/A		RO	Num	ND	NC	PT	
05.033	Slip Compensation Limit	0.00 to 10.00 Hz	10.00 Hz	RW	Num				US
05.035	Auto-switching Frequency Change Disable	0 to 1	0	RW	Num				US
05.036	Slip Compensation Filter	64 (0), 128 (1), 256 (2), 512 (3) ms	128 (1) ms	RW	Txt				US
05.037	Switching Frequency	±VM_MAX_SWITCHING_ FREQUENCY kHz		RO	Txt	ND	NC	PT	
05.038	Minimum Switching Frequency	±VM_MAX_SWITCHING_ FREQUENCY kHz	2 (2) kHz	RW	Txt		RA		US
05.040	Spin Start Boost	0.0 to 10.0	1.0	RW	Num				US
05.042	Reverse Output Phase Sequence	Off (0) or On (1)	Off (0)	RW	Bit				US

Parameter	Designation	Range	Default	Type					
05.043	Motor Type	0.75kW 2P HV (0), 1.10kW 2P HV (1), 1.50kW 2P HV (2), 1.80kW 2P HV (3), 2.20kW 2P HV (4), 3.00kW 2P HV (5), Reserved (6), 4.00kW 2P HV (7), 5.50kW 2P HV (8), 7.50kW 2P HV (9), 0.75kW 4P HV (10), 0.90kW 4P HV (11), 1.10kW 4P HV (12), 1.50kW 4P HV (13), 1.80kW 4P HV (14), 2.20kW 4P HV (15), 3.00kW 4P HV (16), 4.00kW 4P HV (17), 5.50kW 4P HV (18), 7.50kW 4P HV (19), 0.75kW 2P LV (20), 1.10kW 2P LV (21), 1.50kW 2P LV (22), Reserved (23), Reserved (24), 3.00kW 2P LV (25), Reserved (26), 4.00kW 2P LV (27), 0.75kW 4P LV (28), 0.90kW 4P LV (29), 1.10kW 4P LV (30), 1.50kW 4P LV (31), 1.80kW 4P LV (32), 2.20kW 4P LV (33), 3.00kW 4P LV (34), 4.00kW 4P LV (35), 0.25kW 2P HV (36), 0.37kW 2P HV (37), 0.55kW 2P HV (38), 0.25kW 4P HV (39), 0.37kW 4P HV (40), 0.55kW 4P HV (41), 0.25kW 2P LV (42), 0.37kW 2P LV (43), 0.55kW 2P LV (44), 0.25kW 4P LV (45), 0.37kW 4P LV (46), 0.55kW 4P LV (47)	0.75kW 2P HV (0)	RO	Txt		NC	PT	US
05.059	Maximum Deadtime Compensation	0.000 to 10.000 µs	0.000 µs	RO	Num		NC	PT	US
05.060	Current At Maximum Deadtime Compensation	0.00 to 100.00 %	0.00 %	RO	Num		NC	PT	US
05.061	Disable Deadtime Compensation	Off (0) or On (1)	Off (0)	RW	Bit				US
05.074	Boost End Voltage	0.0 to 100.0 %	50.0 %	RW	Num				US
05.075	Boost End Frequency	0.0 to 100.0 %	50.0 %	RW	Num				US
05.076	Second Point Voltage	0.0 to 100.0 %	55.0 %	RW	Num				US
05.077	Second Point Frequency	0.0 to 100.0 %	55.0 %	RW	Num				US
05.078	Third point voltage	0.0 to 100.0 %	75.0 %	RW	Num				US
05.079	Third point frequency	0.0 to 100.0 %	75.0 %	RW	Num				US
05.080	Low acoustic noise enable	Off (0) or On (1)	Off (0)	RW	Bit				US
05.081	Change to maximum drive switching frequency at low output current	Off (0) or On (1)	Off (0)	RW	Bit				US
05.083	Voltage Shelving Disable	Off (0) or On (1)	Off (0)	RW	Bit				US
05.084	Low Frequency Torque adjustment	0.0 to 100.0 %	0.0 %	RW	Num				US
05.085	Low Frequency Switching Frequency	±VM_MAX_SWITCHING_ FREQUENCY kHz	2 (2) kHz	RW	Txt				US
05.086	Switching Frequency Threshold	0.00 to 150.00 Hz	0.00 Hz	RW	Num				US
05.087	Stability Controller Gain	0 to 999	100	RW	Num				US
05.088	Ur Mode Pre-Flux delay	0.0 to 0.7 s	0.1 s	RW	Num				US
05.089	Low Losses Space Vector Modulation	Off (0) or On (1)	Off (0)	RW	Bit				US

6.2.6 - Menu 6 - Sequencer and Clock

Parameter	Designation	Range	Default	Type					
06.001	Stop Mode	Coast (0), Ramp (1), Ramp dc I (2), dc I (3), Timed dc I (4), Disable (5), No Ramp (6)	Ramp (1)	RW	Txt				US
06.002	Limit Switch Stop Mode	Stop (0), Ramp (1)	Ramp (1)	RW	Txt				US
06.003	Supply Loss Mode	Disable (0), Ramp Stop (1), Ride Thru (2)	Disable (0)	RW	Txt				US
06.004	Start/Stop Logic Select	0 to 6	0	RW	Num				US
06.006	Injection Braking Level	0.0 to 150.0 %	100.0 %	RW	Num		RA		US
06.007	Injection Braking Time	0.0 to 100.0 s	1.0 s	RW	Num				US
06.008	Hold Zero Frequency	Off (0) or On (1)	Off (0)	RW	Bit				US
06.009	Catch A Spinning Motor	Disable (0), Enable (1), Fwd Only (2), Rev Only (3)	Disable (0)	RW	Txt				US
06.010	Enable Conditions	000000000000 to 111111110111	-	RO	Bin	ND	NC	PT	
06.011	Sequencer State Machine Inputs	0000000 to 1111111	-	RO	Bin	ND	NC	PT	
06.012	Enable Stop Key	Off (0) or On (1)	Off (0)	RW	Bit				US
06.013	Enable Auxiliary Key	Disabled (0), Forward/Reverse (1), Run Reverse (2)	Disabled (0)	RW	Txt				US
06.014	Disable Auto Reset On Enable	Off (0) or On (1)	Off (0)	RW	Bit				US
06.015	Drive Enable	Off (0) or On (1)	On (1)	RW	Bit				US
06.016	Date	00-00-00 to 31-12-99	-	RW	Date	ND	NC	PT	
06.017	Time	00:00:00 to 23:59:59	-	RW	Time	ND	NC	PT	
06.018	Day Of Week	Sunday (0), Monday (1), Tuesday (2), Wednesday (3), Thursday (4), Friday (5), Saturday (6)	-	RO	Txt	ND	NC	PT	
06.019	Date/Time Selector	Set (0), Powered (1), Running (2), Acc Powered (3), Local Keypad (4), Remote Keypad (5), Slot 1 (6)	Powered (1)	RW	Txt				US
06.020	Date Format	Std (0), US (1)	Std (0)	RW	Txt				US
06.021	Time Between Fan Cleaning	0 to 30000 Hours	0 Hours	RW	Num				US
06.022	Fan Cleaning Active	Off (0) or On (1)	-	RW	Bit	ND	NC		
06.023	Time Before Fan Cleaning	0 to 30000 Hours	-	RO	Num	ND	NC	PT	PS
06.024	Reset Energy Meter	Off (0) or On (1)	Off (0)	RW	Bit				
06.025	Energy Meter: MWh	±999.9 MWh	-	RO	Num	ND	NC	PT	PS
06.026	Energy Meter: kWh	±99.99 kWh	-	RO	Num	ND	NC	PT	PS
06.027	Energy Cost Per kWh	0.0 to 600.0	0.0	RW	Num				US
06.028	Running Cost	±32000	-	RO	Num	ND	NC	PT	
06.029	Hardware Enable	Off (0) or On (1)	-	RO	Bit	ND	NC	PT	
06.030	Run Forward	Off (0) or On (1)	Off (0)	RW	Bit		NC		
06.031	Jog Forward	Off (0) or On (1)	Off (0)	RW	Bit		NC		
06.032	Run Reverse	Off (0) or On (1)	Off (0)	RW	Bit		NC		
06.033	Forward/Reverse	Off (0) or On (1)	Off (0)	RW	Bit		NC		
06.034	Run	Off (0) or On (1)	Off (0)	RW	Bit		NC		
06.035	Forward Limit Switch	Off (0) or On (1)	Off (0)	RW	Bit		NC		
06.036	Reverse Limit Switch	Off (0) or On (1)	Off (0)	RW	Bit		NC		
06.037	Jog Reverse	Off (0) or On (1)	Off (0)	RW	Bit		NC		
06.038	User Enable	Off (0) or On (1)	On (1)	RW	Bit		NC		
06.039	Not Stop	Off (0) or On (1)	Off (0)	RW	Bit		NC		
06.040	Enable Sequencer Latching	Off (0) or On (1)	Off (0)	RW	Bit				US

Parameter	Designation	Range	Default	Type					
06.041	Drive Event Flags	00 to 11	00	RW	Bin		NC		
06.042	Control Word	000000000000000 to 111111111111111	000000000000000	RW	Bin		NC		
06.043	Control Word Enable	0 to 1	0	RW	Num				US
06.045	Cooling Fan control	0 to 2	2	RW	Num				US
06.047	Input Phase Loss Detection Mode	Full (0), Ripple Only (1), Disabled (2)	Full (0)	RW	Txt				US
06.048	Supply Loss Detection Level	0 to VM_SUPPLY_LOSS_LEVEL V	200V drive: 205 V 400V drive: 410 V	RW	Num		RA		US
06.051	Hold Supply Loss Active	Off (0) or On (1)	Off (0)	RW	Bit		NC		
06.052	Motor Pre-heat Current Magnitude	0 to 100 %	0 %	RW	Num				US
06.058	Output Phase Loss Detection Time	0.5s (0), 1.0s (1), 2.0s (2), 4.0s (3)	0.5s (0)	RW	Txt				US
06.059	Output Phase Loss Detection Enable	Off (0) or On (1)	Off (0)	RW	Bit				US
06.060	Standby Mode Enable	Off (0) or On (1)	Off (0)	RW	Bit				US
06.061	Standby Mode Mask	0000 to 1111	0000	RW	Bin				US
06.073	Braking IGBT Lower Threshold	±VM_DC_VOLTAGE_SET V	200V drive: 390 V 400V drive: 780 V	RW	Num		RA		US
06.074	Braking IGBT Upper Threshold	±VM_DC_VOLTAGE_SET V	200V drive: 390 V 400V drive: 780 V	RW	Num		RA		US
06.075	Low Voltage Braking IGBT Threshold	±VM_DC_VOLTAGE_SET V	0 V	RW	Num		RA		US
06.076	Low Voltage Braking IGBT Threshold Select	Off (0) or On (1)	Off (0)	RW	Bit				
06.077	Low DC Link Operation	Off (0) or On (1)	Off (0)	RW	Bit				US
06.084	UTC Offset	±24.00 Hours	0.00 Hours	RW	Num				US
06.089	DC Injection Active	Off (0) or On (1)	-	RO	Bit	ND	NC	PT	US

6.2.7 - Menu 7 - Analog I/O

Parameter	Designation	Range	Default	Type					
07.001	Analog/Digital Input 1	±100.00 %	-	RO	Num	ND	NC	PT	FI
07.002	Analog/Digital Input 2	±100.00 %	-	RO	Num	ND	NC	PT	FI
07.003	Analog/Digital Input/Output 3	±100.00 %	-	RO	Num	ND	NC	PT	FI
07.004	Stack Temperature	±250 °C	-	RO	Num	ND	NC	PT	
07.007	Analog Input 1 Mode	4-20mA Stop (-6), 20-4mA Stop (-5), 4-20mA Low (-4), 20-4mA Low (-3), 4-20mA Hold (-2), 20-4mA Hold (-1), 0-20mA (0), 20-0mA (1), 4-20mA Trp (2), 20-4mA Trp (3), 4-20mA (4), 20-4mA (5), Voltage (6), Digital (7)	Voltage (6)	RW	Txt				US
07.008	Analog Input 1 Scaling	0.000 to 10.000	1.000	RW	Num				US
07.009	Analog Input 1 Invert	Off (0) or On (1)	Off (0)	RW	Bit				US
07.010	Analog Input 1 Destination A	0.000 to 30.999	1.036	RW	Num	DE		PT	US
07.011	Analog Input 2 Mode	4-20mA Stop (-6), 20-4mA Stop (-5), 4-20mA Low (-4), 20-4mA Low (-3), 4-20mA Hold (-2), 20-4mA Hold (-1), 0-20mA (0), 20-0mA (1), 4-20mA Trp (2), 20-4mA Trp (3), 4-20mA (4), 20-4mA (5), Voltage (6), Digital (7)	4-20mA (4)	RW	Txt				US
07.012	Analog Input 2 Scaling	0.000 to 10.000	1.000	RW	Num				US
07.013	Analog Input 2 Invert	Off (0) or On (1)	Off (0)	RW	Bit				US
07.014	Analog Input 2 Destination A	0.000 to 30.999	1.037	RW	Num	DE		PT	US
07.015	Analog I/O 3 Mode	4-20mA Stop (-6), 20-4mA Stop (-5), 4-20mA Low (-4), 20-4mA Low (-3), 4-20mA Hold (-2), 20-4mA Hold (-1), 0-20mA (0), 20-0mA (1), 4-20mA Trp (2), 20-4mA Trp (3), 4-20mA (4), 20-4mA (5), Voltage (6), Digital (7), Analogue Output (8)	Analogue Output (8)	RW	Txt				US
07.016	Analog Input 3 Scaling	0.000 to 10.000	1.000	RW	Num				US
07.017	Analog Input 3 Invert	Off (0) or On (1)	Off (0)	RW	Bit				US
07.018	Analogue Input 3 Destination A	0.000 to 30.999	0.000	RW	Num	DE		PT	US
07.019	Analog Output 3 Source A	0.000 to 30.999	2.001	RW	Num			PT	US
07.020	Analog Output 3 Scaling	0.000 to 40.000	1.000	RW	Num				US
07.026	Analog Input 1 Preset on Current Loss	4.00 to 20.00 mA	4.00 mA	RW	Num				US
07.027	Analog Input 2 Preset on Current Loss	4.00 to 20.00 mA	4.00 mA	RW	Num				US
07.028	Analog Input 1 Current Loop Loss	Off (0) or On (1)		RO	Bit	ND	NC	PT	
07.029	Analog Input 2 Current Loop Loss	Off (0) or On (1)		RO	Bit	ND	NC	PT	
07.030	Analog Input 1 Offset	±100.00 %	0.00 %	RW	Num				US
07.031	Analog Input 2 Offset	±100.00 %	0.00 %	RW	Num				US
07.032	Analog Input 3 Offset	±100.00 %	0.00 %	RW	Num				US
07.034	Inverter Temperature	±250 °C		RO	Num	ND	NC	PT	
07.035	Percentage Of d.c. Link Thermal Trip Level	0 to 100 %		RO	Num	ND	NC	PT	
07.036	Percentage Of Drive Thermal Trip Level	0 to 100 %		RO	Num	ND	NC	PT	
07.037	Temperature Nearest To Trip Level	0 to 29999		RO	Num	ND	NC	PT	
07.040	Analog Input 3 Preset on Current Loss	4.00 to 20.00	4.00	RW	Num				US

Parameter	Designation	Range	Default	Type					
07.041	Analog Input 3 Current Loop Loss	Off (0) or On (1)	-	RO	Bit	ND	NC	PT	
07.045	Analog Input 2 Thermistor Mode	An/Dig Input (0), Therm Short Cct (1), Thermistor (2), Therm No Trip (3)	An/Dig Input (0)	RW	Txt				US
07.046	Thermistor Type	DIN44081 (0), KTY84 (1), PT1000 (2), PT2000 (3), Other (4)	DIN44081 (0)	RW	Txt				US
07.047	Thermistor Feedback	0 to 4000 Ω	-	RO	Num	ND	NC	PT	FI
07.048	Thermistor Trip Threshold	0 to 4000 Ω	3300 Ω	RW	Num				US
07.049	Thermistor Reset Threshold	0 to 4000 Ω	1800 Ω	RW	Num				US
07.050	Thermistor Temperature	-50 to 300 °C	-	RO	Num	ND	NC	PT	FI
07.051	Analog Input 1 Control	0 to 5	0	RW	Num				US
07.052	Analog Input 2 Control	0 to 5	0	RW	Num				US
07.053	Analog Input 3 Control	0 to 5	0	RW	Num				US
07.057	Analog Output 3 Control	0 to 16	16	RW	Num				US
07.061	Analog Input 1 Minimum Reference	0.00 to 100.00 %	0.00 %	RW	Num				US
07.062	Analog Input 1 At Minimum Reference	±100.00 %	-100.00 %	RW	Num				US
07.063	Analog Input 1 Maximum Reference	0.00 to 100.00 %	100.00 %	RW	Num				US
07.064	Analog Input 1 At Maximum Reference	±100.00 %	100.00 %	RW	Num				US
07.065	Analog Input 2 Minimum Reference	0.00 to 100.00 %	0.00 %	RW	Num				US
07.066	Analog Input 2 At Minimum Reference	±100.00 %	0.00 %	RW	Num				US
07.067	Analog Input 2 Maximum Reference	0.00 to 100.00 %	100.00 %	RW	Num				US
07.068	Analog Input 2 At Maximum Reference	±100.00 %	100.00 %	RW	Num				US
07.069	Analog Input 3 Minimum Reference	0.00 to 100.00 %	0.00 %	RW	Num				US
07.070	Analog Input 3 At Minimum Reference	±100.00 %	0.00 %	RW	Num				US
07.071	Analog Input 3 Maximum Reference	0.00 to 100.00 %	100.00 %	RW	Num				US
07.072	Analog Input 3 At Maximum Reference	±100.00 %	100.00 %	RW	Num				US
07.090	Analog Input 1 Destination B	0.000 to 30.999	-	RO	Num	DE	NC	PT	US
07.094	Analog Input 2 Destination B	0.000 to 30.999	-	RO	Num	DE	NC	PT	US
07.099	Analog Output 3 Source B	0.000 to 30.999	-	RO	Num	ND	NC	PT	US
07.102	Analog Output 2 Source B	0.000 to 30.999	-	RO	Num	ND	NC	PT	US

6.2.8 - Menu 8 - Digital I/O

Parameter	Designation	Range	Default	Type					
08.001	Digital I/O 1 State	Off (0) or On (1)	-	RO	Bit	ND	NC	PT	
08.002	Digital Input 2 State	Off (0) or On (1)	-	RO	Bit	ND	NC	PT	
08.003	Digital Input 3 State	Off (0) or On (1)	-	RO	Bit	ND	NC	PT	
08.004	Digital Input 4 State	Off (0) or On (1)	-	RO	Bit	ND	NC	PT	
08.008	Relay 1 Output State	Off (0) or On (1)	-	RO	Bit	ND	NC	PT	
08.011	Digital I/O 1 Invert	Not Invert (0), Invert (1)	Not Invert (0)	RW	Txt				US
08.012	Digital Input 2 Invert	Not Invert (0), Invert (1)	Not Invert (0)	RW	Txt				US
08.013	Digital Input 3 Invert	Not Invert (0), Invert (1)	Not Invert (0)	RW	Txt				US
08.014	Digital Input 4 Invert	Not Invert (0), Invert (1)	Not Invert (0)	RW	Txt				US
08.018	Relay 1 Invert	Not Invert (0), Invert (1)	Not Invert (0)	RW	Txt				US
08.020	Digital I/O Read Word	000000000000 to 111111111111	-	RO	Bin	ND	NC	PT	
08.021	Digital IO1 Source/Destination A	0.000 to 30.999	01.041	RW	Num	DE		PT	US
08.022	Digital Input 2 Source/Destination A	0.000 to 30.999	ID302: 0.000 ID300: 06.038	RW	Num	DE		PT	US
08.023	Digital Input 03 Destination A	0.000 to 30.999	6.030	RW	Num	DE		PT	US
08.024	Digital Input 04 Destination A	0.000 to 30.999	6.032	RW	Num	DE		PT	US
08.028	Relay 1 Output Source A	0.000 to 30.999	10.001	RW	Num			PT	US
08.031	Digital I/O 01 mode	Input (0), Output (1), Frequency output (2), PWM output (3)	Input (0)	RW	Txt				US
08.033	Digital Input 3/4 mode	Digital Input (0), Frequency (1), Encoder AB (2)	Digital Input (0)	RW	Txt				US
08.039	STO Input 01 State (ID302 only)	Off (0) or On (1)	-	RO	Bit	ND	NC	PT	
08.040	STO Input 02 State (ID302 only)	Off (0) or On (1)	-	RO	Bit	ND	NC	PT	
08.041	Keypad Run Button State	Off (0) or On (1)	-	RO	Bit	ND	NC	PT	
08.042	Keypad Auxiliary Button State	Off (0) or On (1)	-	RO	Bit	ND	NC	PT	
08.044	Keypad Stop Button State	Off (0) or On (1)	-	RO	Bit	ND	NC	PT	
08.051	Keypad Run Button Invert/Toggle	Not Invert (0), Invert (1), Toggle (2)	Not Invert (0)	RW	Txt				US
08.052	Keypad Auxiliary Button Invert/ Toggle	Not Invert (0), Invert (1), Toggle (2)	Not Invert (0)	RW	Txt				US
08.061	Keypad Run Button Destination	0.000 to 30.999	0.000	RW	Num	DE		PT	US
08.062	Keypad Auxiliary Button Destination	0.000 to 30.999	0.000	RW	Num	DE		PT	US
08.081	DI1 Control	0 to 26	0	RW	Num				US
08.082	DI2 Control	0 to 26	0	RW	Num				US
08.083	DI3 Control	0 to 26	0	RW	Num				US
08.084	DI4 Control	0 to 26	0	RW	Num				US
08.091	DO1 Control	0 to 21	0	RW	Num				US
08.092	DO2 Control	0 to 21	0	RW	Num				US
08.098	Relay 1 Control	0 to 21	0	RW	Num				US
08.121	DI/O 01 Source/Destination B	0.000 to 30.999	-	RO	Num	DE	NC	PT	US
08.122	DI 02 Destination B	0.000 to 30.999	-	RO	Num	DE	NC	PT	US
08.123	DI 03 Destination B	0.000 to 30.999	-	RO	Num	DE	NC	PT	US
08.124	DI 04 Destination B	0.000 to 30.999	-	RO	Num	DE	NC	PT	US
08.128	Relay 01 Source B	0.000 to 30.999	-	RO	Num	ND	NC	PT	US

NOTE

6.2.9 - Menu 9 - User Functions 1

Parameter	Designation	Range	Default	Type					
09.001	Logic Function 1 Output	Off (0) or On (1)	-	RO	Bit	ND	NC	PT	
09.002	Logic Function 2 Output	Off (0) or On (1)	-	RO	Bit	ND	NC	PT	
09.003	Motorised Pot Output	±100.00 %	-	RO	Num	ND	NC	PT	PS
09.004	Logic Function 1 Source 1	0.000 to 30.999	0.000	RW	Num			PT	US
09.005	Logic Function 1 Source 1 Invert	Off (0) or On (1)	Off (0)	RW	Bit				US
09.006	Logic Function 1 Source 2	0.000 to 30.999	0.000	RW	Num			PT	US
09.007	Logic Function 1 Source 2 Invert	Off (0) or On (1)	Off (0)	RW	Bit				US
09.008	Logic Function 1 Output Invert	Off (0) or On (1)	Off (0)	RW	Bit				US
09.009	Logic Function 1 Delay	±25.0 s	0.0 s	RW	Num				US
09.010	Logic Function 1 Destination	0.000 to 30.999	0.000	RW	Num	DE		PT	US
09.014	Logic Function 2 Source 1	0.000 to 30.999	0.000	RW	Num			PT	US
09.015	Logic Function 2 Source 1 Invert	Off (0) or On (1)	Off (0)	RW	Bit				US
09.016	Logic Function 2 Source 2	0.000 to 30.999	0.000	RW	Num			PT	US
09.017	Logic Function 2 Source 2 Invert	Off (0) or On (1)	Off (0)	RW	Bit				US
09.018	Logic Function 2 Output Invert	Off (0) or On (1)	Off (0)	RW	Bit				US
09.019	Logic Function 2 Delay	±25.0 s	0.0 s	RW	Num				US
09.020	Logic Function 2 Destination	0.000 to 30.999	0.000	RW	Num	DE		PT	US
09.021	Motorised Pot Mode	0 to 4	0	RW	Num				US
09.022	Motorised Pot Bipolar Select	Off (0) or On (1)	Off (0)	RW	Bit				US
09.023	Motorised Pot Rate	0 to 250 s	20 s	RW	Num				US
09.024	Motorised Pot Scaling	0.000 to 4.000	1.000	RW	Num				US
09.025	Motorised Pot Destination	0.000 to 30.999	0.000	RW	Num	DE		PT	US
09.026	Motorised Pot Up	Off (0) or On (1)	Off (0)	RW	Bit		NC		
09.027	Motorised Pot Down	Off (0) or On (1)	Off (0)	RW	Bit		NC		
09.028	Motorised Pot Reset	Off (0) or On (1)	Off (0)	RW	Bit		NC		
09.029	Binary Sum Ones	Off (0) or On (1)	Off (0)	RW	Bit				
09.030	Binary Sum Twos	Off (0) or On (1)	Off (0)	RW	Bit				
09.031	Binary Sum Fours	Off (0) or On (1)	Off (0)	RW	Bit				
09.032	Binary Sum Output	0 to 255	-	RO	Num	ND	NC	PT	
09.033	Binary Sum Destination	0.000 to 30.999	0.000	RW	Num	DE		PT	US
09.034	Binary Sum Offset	0 to 248	0	RW	Num				US
09.035	Timer 1 Start Date	00-00-00 to 31-12-99	00-00-00	RW	Date				US
09.036	Timer 1 Start Time	00:00:00 to 23:59:59	00:00:00	RW	Time				US
09.037	Timer 1 Stop Date	00-00-00 to 31-12-99	00-00-00	RW	Date				US
09.038	Timer 1 Stop Time	00:00:00 to 23:59:59	00:00:00	RW	Time				US
09.039	Timer 1 Repeat Function	None (0), Hour (1), Day (2), Week (3), Month (4), Year (5), One off (6), Minute (7)	None (0)	RW	Txt				US
09.040	Timer 1 Enable	Off (0) or On (1)	Off (0)	RW	Bit				US
09.041	Timer 1 Invert	Off (0) or On (1)	Off (0)	RW	Bit				US
09.042	Timer 1 Output	Off (0) or On (1)	-	RO	Bit	ND	NC	PT	
09.043	Timer 1 Destination	0.000 to 30.999	0.000	RW	Num	DE		PT	US
09.045	Timer 2 Start Date	00-00-00 to 31-12-99	00-00-00	RW	Date				US
09.046	Timer 2 Start Time	00:00:00 to 23:59:59	00:00:00	RW	Time				US
09.047	Timer 2 Stop Date	00-00-00 to 31-12-99	00-00-00	RW	Date				US
09.048	Timer 2 Stop Time	00:00:00 to 23:59:59	00:00:00	RW	Time				US

Parameter	Designation	Range	Default	Type					
09.049	Timer 2 Repeat Function	None (0), Hour (1), Day (2), Week (3), Month (4), Year (5), One off (6), Minute (7)	None (0)	RW	Txt				US
09.050	Timer 2 Enable	Off (0) or On (1)	Off (0)	RW	Bit				US
09.051	Timer 2 Invert	Off (0) or On (1)	Off (0)	RW	Bit				US
09.052	Timer 2 Output	Off (0) or On (1)	-	RO	Bit	ND	NC	PT	
09.053	Timer 2 Destination	0.000 to 30.999	0.000	RW	Num	DE		PT	US
09.055	Scope Trace 1 Source	0.000 to 30.999	0.000	RW	Num			PT	US
09.056	Scope Trace 2 Source	0.000 to 30.999	0.000	RW	Num			PT	US
09.057	Scope Trace 3 Source	0.000 to 30.999	0.000	RW	Num			PT	US
09.058	Scope Trace 4 Source	0.000 to 30.999	0.000	RW	Num			PT	US
09.059	Scope Trigger	Off (0) or On (1)	Off (0)	RW	Bit				
09.060	Scope Trigger Source	0.000 to 30.999	0.000	RW	Num			PT	US
09.061	Scope Trigger Threshold	-2147483648 to 2147483647	0	RW	Num				US
09.062	Scope Trigger Invert	Off (0) or On (1)	Off (0)	RW	Bit				US
09.063	Scope Mode	Single (0), Normal (1), Auto (2)	Single (0)	RW	Txt				US
09.064	Scope Arm	Off (0) or On (1)	Off (0)	RW	Bit		NC		
09.065	Scope Data Not Ready	Off (0) or On (1)	-	RO	Bit	ND	NC	PT	
09.066	Scope Saving Data	Off (0) or On (1)	-	RO	Bit	ND	NC	PT	
09.067	Scope Sample Time	1 to 200	1	RW	Num				US
09.068	Scope Trigger Delay	0 to 100 %	0 %	RW	Num				US
09.069	Scope Time Period	0.00 to 200000.00 ms	-	RO	Num	ND	NC	PT	

6.2.10 - Menu 10 - Status and Trips

Parameter	Designation	Range	Default	Type					
10.001	Drive Healthy	Off (0) or On (1)	-	RO	Bit	ND	NC	PT	
10.002	Drive Active	Off (0) or On (1)	-	RO	Bit	ND	NC	PT	
10.003	Zero Frequency	Off (0) or On (1)	-	RO	Bit	ND	NC	PT	
10.004	Running At Or Below Minimum Frequency	Off (0) or On (1)	-	RO	Bit	ND	NC	PT	
10.005	Below Set Frequency	Off (0) or On (1)	-	RO	Bit	ND	NC	PT	
10.006	At Frequency	Off (0) or On (1)	-	RO	Bit	ND	NC	PT	
10.007	Above Set Frequency	Off (0) or On (1)	-	RO	Bit	ND	NC	PT	
10.008	Rated Load Reached	Off (0) or On (1)	-	RO	Bit	ND	NC	PT	
10.009	Current Limit Active	Off (0) or On (1)	-	RO	Bit	ND	NC	PT	
10.010	Regenerating	Off (0) or On (1)	-	RO	Bit	ND	NC	PT	
10.011	Braking IGBT Active	Off (0) or On (1)	-	RO	Bit	ND	NC	PT	
10.012	Braking Resistor Alarm	Off (0) or On (1)	-	RO	Bit	ND	NC	PT	
10.013	Reverse Direction Commanded	Off (0) or On (1)	-	RO	Bit	ND	NC	PT	
10.014	Reverse Direction Running	Off (0) or On (1)	-	RO	Bit	ND	NC	PT	
10.015	Supply Loss	Off (0) or On (1)	-	RO	Bit	ND	NC	PT	
10.016	Under Voltage Active	Off (0) or On (1)	-	RO	Bit	ND	NC	PT	
10.017	Motor Overload Alarm	Off (0) or On (1)	-	RO	Bit	ND	NC	PT	
10.018	Drive Over-temperature Alarm	Off (0) or On (1)	-	RO	Bit	ND	NC	PT	
10.019	Drive Warning	Off (0) or On (1)	-	RO	Bit	ND	NC	PT	
10.020 to 10.029	Trip 0 to trip 9	0 to 255	-	RO	Txt	ND	NC	PT	PS
10.030	Braking Resistor Rated Power	0.0 to 99999.9 kW	0.0 kW	RW	Num				US
10.031	Braking Resistor Thermal Time Constant	0.00 to 1500.00 s	0.00 s	RW	Num				US
10.032	External Trip	Off (0) or On (1)	Off (0)	RW	Bit		NC		
10.033	Drive Reset	Off (0) or On (1)	Off (0)	RW	Bit		NC		
10.034	Number Of Auto-reset Attempts	None (0), 1 (1), 2 (2), 3 (3), 4 (4), 5 (5), Infinite (6)	None (0)	RW	Txt				US
10.035	Auto-reset Delay	1.0 to 600.0 s	1.0 s	RW	Num				US
10.036	Auto-reset Hold Drive Healthy	Off (0) or On (1)	Off (0)	RW	Bit				US
10.037	Action On Trip Detection	00000 to 11111	00000	RW	Bin				US
10.038	User Trip	0 to 255	-	RW	Num	ND	NC		
10.039	Braking Resistor Thermal Accumulator	0.0 to 100.0 %	-	RO	Num	ND	NC	PT	
10.040	Status Word	000000000000000 to 111111111111111	-	RO	Bin	ND	NC	PT	
10.041	Trip 0 Date	00-00-00 to 31-12-99	-	RO	Date	ND	NC	PT	PS
10.042	Trip 0 Time	00:00:00 to 23:59:59	-	RO	Time	ND	NC	PT	PS
10.043	Trip 1 Date	00-00-00 to 31-12-99	-	RO	Date	ND	NC	PT	PS
10.044	Trip 1 Time	00:00:00 to 23:59:59	-	RO	Time	ND	NC	PT	PS
10.045	Trip 2 Date	00-00-00 to 31-12-99	-	RO	Date	ND	NC	PT	PS
10.046	Trip 2 Time	00:00:00 to 23:59:59	-	RO	Time	ND	NC	PT	PS
10.047	Trip 3 Date	00-00-00 to 31-12-99	-	RO	Date	ND	NC	PT	PS
10.048	Trip 3 Time	00:00:00 to 23:59:59	-	RO	Time	ND	NC	PT	PS
10.049	Trip 4 Date	00-00-00 to 31-12-99	-	RO	Date	ND	NC	PT	PS
10.050	Trip 4 Time	00:00:00 to 23:59:59	-	RO	Time	ND	NC	PT	PS

Parameter	Designation	Range	Default	Type					
10.051	Trip 5 Date	00-00-00 to 31-12-99	-	RO	Date	ND	NC	PT	PS
10.052	Trip 5 Time	00:00:00 to 23:59:59	-	RO	Time	ND	NC	PT	PS
10.053	Trip 6 Date	00-00-00 to 31-12-99	-	RO	Date	ND	NC	PT	PS
10.054	Trip 6 Time	00:00:00 to 23:59:59	-	RO	Time	ND	NC	PT	PS
10.055	Trip 7 Date	00-00-00 to 31-12-99	-	RO	Date	ND	NC	PT	PS
10.056	Trip 7 Time	00:00:00 to 23:59:59	-	RO	Time	ND	NC	PT	PS
10.057	Trip 8 Date	00-00-00 to 31-12-99	-	RO	Date	ND	NC	PT	PS
10.058	Trip 8 Time	00:00:00 to 23:59:59	-	RO	Time	ND	NC	PT	PS
10.059	Trip 9 Date	00-00-00 to 31-12-99	-	RO	Date	ND	NC	PT	PS
10.060	Trip 9 Time	00:00:00 to 23:59:59	-	RO	Time	ND	NC	PT	PS
10.061	Braking Resistor Resistance	0.00 to 10000.00 Ω	0.00 Ω	RW	Num				US
10.064	Remote Keypad Battery Low	Off (0) or On (1)	-	RO	Bit	ND	NC	PT	
10.065	Auto-tune Active	Off (0) or On (1)	-	RO	Bit	ND	NC	PT	
10.066	Limit Switch Active	Off (0) or On (1)	-	RO	Bit	ND	NC	PT	
10.068	Hold Drive Healthy on Under Voltage	Off (0) or On (1)	Off (0)	RW	Bit				US
10.069	Additional Status Bits	000000000000 to 111111111111	-	RO	Bin	ND	NC	PT	
10.070 to 10.079	Trip 0 to trip 9 Sub-trip Number	0 to 65535	-	RO	Num	ND	NC	PT	PS
10.080	Stop Motor	Off (0) or On (1)	-	RO	Bit	ND	NC	PT	
10.081	Phase Loss	Off (0) or On (1)	-	RO	Bit	ND	NC	PT	
10.090	Drive Ready	Off (0) or On (1)	-	RO	Bit	ND	NC	PT	
10.101	Drive Status	Inhibit (0), Ready (1), Stop (2), Run (4), Supply Loss (5), Deceleration (6), dc Injection (7), Trip (9), Heat (14), Under Voltage (15)	-	RO	Txt	ND	NC	PT	
10.102	Trip Reset Source	0 to 1023	-	RO	Num	ND	NC	PT	PS
10.103	Trip Time Identifier	-2147483648 to 2147483647 ms	-	RO	Num	ND	NC	PT	
10.104	Active Alarm	None (0), Brake Resistor (1), Motor Overload (2), Drive Overload (4), Auto Tune (5), Limit Switch (6), Option Slot 1 (9), Low AC (13), Current limit (14), 24V Backup Lost (15), Fan (16)	-	RO	Txt	ND	NC	PT	
10.106	Potential Drive Damage Conditions	00 to 11	-	RO	Bin	ND	NC	PT	PS
10.107	Low AC Alarm	Off (0) or On (1)	-	RO	Bit	ND	NC	PT	
10.108	Cooling fan failure	Off (0) or On (1)	-	RO	Bit	ND	NC	PT	

6.2.11 - Menu 11 - Miscellaneous

Parameter	Designation	Range	Default	Type					
11.018	Status Mode Parameter 1	0.000 to 30.999	2.001	RW	Num			PT	US
11.019	Status Mode Parameter 2	0.000 to 30.999	4.020	RW	Num			PT	US
11.020	Reset Serial Communications	Off (0) or On (1)	-	RW	Bit	ND	NC		
11.021	Customer defined scaling	0.000 to 10.000	1.000	RW	Num				US
11.022	Active Parameter At Power-up	0.000 to 0.095	0.010	RW	Num			PT	US
11.023	Serial Address	1 to 247	1	RW	Num				US
11.024	Serial Mode	8 2 NP (0), 8 1 NP (1), 8 1 EP (2), 8 1 OP (3), 8 2 NP M (4), 8 1 NP M (5), 8 1 EP M (6), 8 1 OP M (7), 7 1 EP (8), 7 1 OP (9)	8 1 NP (1)	RW	Txt				US
11.025	Serial Baud Rate	600 (1), 1200 (2), 2400 (3), 4800 (4), 9600 (5), 19200 (6), 38400 (7), 57600 (8), 76800 (9), 115200 (10) Baud	115200 (10) Baud	RW	Txt				US
11.026	Minimum Comms Transmit Delay	0 to 250 ms	2 ms	RW	Num				US
11.027	Silent Period	0 to 250 ms	0 ms	RW	Num				US
11.028	Drive Derivative	0 to 255	-	RO	Num	ND	NC	PT	
11.029	Software Version	0 to 99999999	-	RO	Num	ND	NC	PT	
11.030	User Security Code	0 to 9999	-	RW	Num	ND		PT	US
11.031	User Drive Mode	Open-loop (1)	-	RW	Txt	ND	NC	PT	
11.032	Maximum Heavy Duty Rating	0.00 to 9999.99 A	-	RO	Num	ND	NC	PT	
11.033	Drive Rated Voltage	200V (1), 400V (2)	-	RO	Txt	ND	NC	PT	
11.034	Drive Configuration	STANDARD AV/AI (11), AV with brake (12), 3PS/1Ana brake (13), 3PS/1Ana Nobrake (14), 8 Preset (15), Keypad (16), Keypad Ref (17), Electronic Pot (18), Torque Control (19), Pid Control (20), Local/Remote (21), Pump (22)	STANDARD AV/AI (11)	RW	Txt			PT	US
11.035	Power Software Version	0 to 99999999	-	RO	Num	ND	NC	PT	
11.042	Parameter Cloning	None (0), Read (1), Program (2), Auto (3), Boot (4)	None (0)	RW	Txt		NC		US
11.043	Load Defaults	None (0), Standard (1)	None (0)	RW	Txt		NC		
11.044	User Security Status	Level 1 (0), Level 2 (1), All Menus (2), Status Only (3), No Access (4)	-	RW	Txt	ND		PT	
11.045	Select Motor 2 Parameters	Motor 1 (0), Motor 2 (1)	Motor 1 (0)	RW	Txt				US
11.046	Defaults Previously Loaded	0 to 2000	-	RO	Num	ND	NC	PT	US
11.047	Onboard User Program: Enable	Stop (0), Run (1)	Run (1)	RW	Txt				US
11.048	Onboard User Program: Status	-2147483648 to 2147483647	-	RO	Num	ND	NC	PT	
11.049	Onboard User Program: Programming Events	0 to 65535	-	RO	Num	ND	NC	PT	
11.050	Onboard User Program: FreewheelingTasks Per Second	0 to 65535	-	RO	Num	ND	NC	PT	
11.051	Onboard User Program: Clock Task Time Used	0.0 to 100.0 %	-	RO	Num	ND	NC	PT	
11.052	Serial Number LS	000000 to 999999	-	RO	Num	ND	NC	PT	
11.053	Serial Number MS	0 to 999999	-	RO	Num	ND	NC	PT	
11.054	Drive Date Code	0000 to 9999	-	RO	Num	ND	NC	PT	
11.055	Onboard User Program: Clock Task Schedule Rate	0 to 262128 ms	-	RO	Num	ND	NC	PT	
11.060	Maximum Rated Current	0.000 to 999.999 A	-	RO	Num	ND	NC	PT	

Parameter	Designation	Range	Default	Type					
11.061	Full Scale Current Kc	0.000 to 999.999 A	-	RO	Num	ND	NC	PT	
11.063	Product Type	0 to 255	-	RO	Num	ND	NC	PT	
11.064	Product Identifier Characters	1295265840 to 2147483647	-	RO	Num	ND	NC	PT	
11.065	Frame size and voltage code	000 to 999	-	RO	Num	ND	NC	PT	
11.066	Power Stage Identifier	0 to 255	-	RO	Num	ND	NC	PT	
11.067	Control Board Identifier	0 to 255	-	RO	Num	ND	NC	PT	
11.068	Drive current rating	00000 to 32767	-	RO	Num	ND	NC	PT	
11.070	Core Parameter Database Version	0.00 to 99.99	-	RO	Num	ND	NC	PT	
11.079	Drive Name Characters 1-4	-2147483648 to 2147483647	757935405	RW	Num			PT	US
11.080	Drive Name Characters 5-8	-2147483648 to 2147483647	757935405	RW	Num			PT	US
11.081	Drive Name Characters 9-12	-2147483648 to 2147483647	757935405	RW	Num			PT	US
11.082	Drive Name Characters 13-16	-2147483648 to 2147483647	757935405	RW	Num			PT	US
11.084	Drive Mode	Open-loop (1)	-	RO	Txt	ND	NC	PT	US
11.085	Security Status	None (0), Read-only (1), Status-only (2), No Access (3)	-	RO	Txt	ND	NC	PT	PS
11.086	Menu Access Status	Menu 0 Level 1 (0), Menu 0 (1), All Menus (2)	-	RO	Txt	ND	NC	PT	PS
11.091	Additional Identifier Characters 1	-2147483648 to 2147483647	-	RO	Num	ND	NC	PT	
11.092	Additional Identifier Characters 2	-2147483648 to 2147483647	-	RO	Num	ND	NC	PT	
11.093	Additional Identifier Characters 3	-2147483648 to 2147483647	-	RO	Num	ND	NC	PT	
11.099	Modbus Parameter Conversion	0000 to 1111	0000	RW	Bin				US

6.2.12 - Menu 12 - User Functions 2 and Brake Control

Parameter	Designation	Range	Default	Type					
12.001	Threshold Detector 1 Output	Off (0) or On (1)	-	RO	Bit	ND	NC	PT	
12.002	Threshold Detector 2 Output	Off (0) or On (1)	-	RO	Bit	ND	NC	PT	
12.003	Threshold Detector 1 Source	0.000 to 30.999	0.000	RW	Num			PT	US
12.004	Threshold Detector 1 Level	0.00 to 100.00 %	0.00 %	RW	Num				US
12.005	Threshold Detector 1 Hysteresis	0.00 to 25.00 %	0.00 %	RW	Num				US
12.006	Threshold Detector 1 Output Invert	Off (0) or On (1)	Off (0)	RW	Bit				US
12.007	Threshold Detector 1 Destination	0.000 to 30.999	0.000	RW	Num	DE		PT	US
12.008	Variable Selector 1 Source 1	0.000 to 30.999	0.000	RW	Num			PT	US
12.009	Variable Selector 1 Source 2	0.000 to 30.999	0.000	RW	Num			PT	US
12.010	Variable Selector 1 Mode	Input 1 (0), Input 2 (1), Add (2), Subtract (3), Multiply (4), Divide (5), Time Const (6), Ramp (7), Modulus (8), Powers (9)	Input 1 (0)	RW	Txt				US
12.011	Variable Selector 1 Destination	0.000 to 30.999	0.000	RW	Num	DE		PT	US
12.012	Variable Selector 1 Output	±100.00 %	-	RO	Num	ND	NC	PT	
12.013	Variable Selector 1 Source 1 Scaling	±4.000	1.000	RW	Num				US
12.014	Variable Selector 1 Source 2 Scaling	±4.000	1.000	RW	Num				US
12.015	Variable Selector 1 Control	0.00 to 100.00	0.00	RW	Num				US
12.016	Variable Selector 1 Enable	Off (0) or On (1)	On (1)	RW	Bit				US
12.023	Threshold Detector 2 Source	0.000 to 30.999	0.000	RW	Num			PT	US
12.024	Threshold Detector 2 Level	0.00 to 100.00 %	0.00 %	RW	Num				US
12.025	Threshold Detector 2 Hysteresis	0.00 to 25.00 %	0.00 %	RW	Num				US
12.026	Threshold Detector 2 Output Invert	Off (0) or On (1)	Off (0)	RW	Bit				US
12.027	Threshold Detector 2 Destination	0.000 to 30.999	0.000	RW	Num	DE		PT	US
12.028	Variable Selector 2 Source 1	0.000 to 30.999	0.000	RW	Num			PT	US
12.029	Variable Selector 2 Source 2	0.000 to 30.999	0.000	RW	Num			PT	US
12.030	Variable Selector 2 Mode	Input 1 (0), Input 2 (1), Add (2), Subtract (3), Multiply (4), Divide (5), Time Const (6), Ramp (7), Modulus (8), Powers (9)	Input 1 (0)	RW	Txt				US
12.031	Variable Selector 2 Destination	0.000 to 30.999	0.000	RW	Num	DE		PT	US
12.032	Variable Selector 2 Output	±100.00 %	-	RO	Num	ND	NC	PT	
12.033	Variable Selector 2 Source 1 Scaling	±4.000	1.000	RW	Num				US
12.034	Variable Selector 2 Source 2 Scaling	±4.000	1.000	RW	Num				US
12.035	Variable Selector 2 Control	0.00 to 100.00	0.00	RW	Num				US
12.036	Variable Selector 2 Enable	Off (0) or On (1)	On (1)	RW	Bit				US
12.040	BC Brake Release	Off (0) or On (1)	-	RO	Bit	ND	NC	PT	
12.041	BC Enable	Disable (0), Relay (1), Digital IO (2), User (3)	Disable (0)	RW	Txt				US
12.042	BC Upper Current Threshold	0 to 200 %	50 %	RW	Num				US
12.043	BC Lower Current Threshold	0 to 200 %	10 %	RW	Num				US
12.044	BC Brake Release Frequency	0.00 to 20.00 Hz	1.00 Hz	RW	Num				US
12.045	BC Brake Apply Frequency	0.00 to 20.00 Hz	2.00 Hz	RW	Num				US
12.046	BC Brake Release Delay	0.0 to 25.0 s	0.1 s	RW	Num				US
12.047	BC Post-brake Release Delay	0.0 to 25.0 s	0.1 s	RW	Num				US
12.050	BC Initial Direction	Ref (0), Forward (1), Reverse (2)	Ref (0)	RW	Txt				US
12.051	BC Brake Apply Through Zero Threshold	0.00 to 20.00 Hz	1.00 Hz	RW	Num				US

6.2.13 - Menu 14 - User PID Controller

Parameter	Designation	Range	Default	Type					
14.001	PID1 Output	±100.00 %	-	RO	Num	ND	NC	PT	
14.002	PID1 Feed-forward Reference Source	0.000 to 30.999	0.000	RW	Num			PT	US
14.003	PID1 Reference Source	0.000 to 30.999	0.000	RW	Num			PT	US
14.004	PID1 Feedback Source	0.000 to 30.999	0.000	RW	Num			PT	US
14.005	PID1 Reference Invert	Off (0) or On (1)	Off (0)	RW	Bit				US
14.006	PID1 Feedback Invert	Off (0) or On (1)	Off (0)	RW	Bit				US
14.007	PID1 Reference Slew Rate	0.0 to 3200.0 s	0.0 s	RW	Num				US
14.008	PID1 Enable	Off (0) or On (1)	Off (0)	RW	Bit				US
14.009	PID1 Enable Source 1	0.000 to 30.999	0.000	RW	Num			PT	US
14.010	PID1 Proportional Gain	0.000 to 4.000	1.000	RW	Num				US
14.011	PID1 Integral Gain	0.000 to 4.000	0.500	RW	Num				US
14.012	PID1 Differential Gain	0.000 to 4.000	0.000	RW	Num				US
14.013	PID1 Output Upper Limit	0.00 to 100.00 %	100.00 %	RW	Num				US
14.014	PID1 Output Lower Limit	±100.00 %	-100.00 %	RW	Num				US
14.015	PID1 Output Scaling	0.000 to 4.000	1.000	RW	Num				US
14.016	PID1 Destination	0.000 to 30.999	0.000	RW	Num	DE		PT	US
14.017	PID1 Integral Hold	Off (0) or On (1)	Off (0)	RW	Bit				
14.018	PID1 Symmetrical Limit Enable	Off (0) or On (1)	Off (0)	RW	Bit				US
14.019	PID1 Feed-forward Reference	±100.00 %	-	RO	Num	ND	NC	PT	
14.020	PID1 Reference	±100.00 %	-	RO	Num	ND	NC	PT	
14.021	PID1 Feedback	±100.00 %	-	RO	Num	ND	NC	PT	
14.022	PID1 Error	±100.00 %	-	RO	Num	ND	NC	PT	
14.023	PID1 Reference Scaling	0.000 to 4.000	1.000	RW	Num				US
14.024	PID1 Feedback Scaling	0.000 to 4.000	1.000	RW	Num				US
14.025	PID1 Digital Reference	±100.00 %	0.00 %	RW	Num				US
14.026	PID1 Digital Feedback	±100.00 %	0.00 %	RW	Num				US
14.027	PID1 Enable Source 2	0.000 to 30.999	0.000	RW	Num			PT	US

6.2.14 - Menu 15 - Optional module setup

Menu 15 is dependent on the module option fitted into slot1 of the drive. Parameters Pr **15.001** to **15.008** are common to all option modules, see the parameter table below.
To set up the option module (menus 1.01 to 1.09), see the relevant option module user guide.

Parameter	Designation	Range	Default	Type					
15.001	Module ID	0 to 65535	-	RO	Num	ND	NC	PT	
15.002	Software Version	00.00.00 to 99.99.99	-	RO	Ver	ND	NC	PT	
15.003	Hardware Version	0.00 to 99.99	-	RO	Num	ND	NC	PT	
15.004	Serial Number LS	0 to 999999	-	RO	Num	ND	NC	PT	
15.005	Serial Number MS		-	RO	Num	ND	NC	PT	
15.006	Status	-2 to 3	-	RO	Txt	ND	NC	PT	
15.007	Reset	Off (0) or On (1)	Off (0)	RW	Bit		NC		

The optional module ID are as follows:

Module ID	Module Name	Module ID	Module Name	Module ID	Module Name
0	No module installed	**433**	SI-Ethernet	**447**	SI-DeviceNet
209	SI-I/O	**434**	SI-PROFINET V2	**448**	SI-CANopen
431	SI-EtherCAT	**443**	SI-PROFIBUS		

6.2.15 - Menu 18 - Application Menu 1

Parameter	Designation	Range	Default	Type					
18.001	Application Menu 1 Power-down Save Integer	-32768 to 32767	0	RW	Num				PS
18.002 to 18.004	Application Menu 1 Read-only Integer 2 to 4	-32768 to 32767		RO	Num	ND	NC		
18.005	Application Menu 1 Read-only Integer 5 (used by Pump configuration: analog signal destination)	-32768 to 32767		RO	Num	ND	NC		
18.006	Application Menu 1 Read-only Integer 6	-32768 to 32767		RO	Num	ND	NC		
18.007	Application Menu 1 Read-only Integer 7 (used by Pump configuration: sensor feedback source)	-32768 to 32767		RO	Num	ND	NC		
18.008 to 18.011	Application Menu 1 Read-only Integer 8 to 11	-32768 to 32767		RO	Num	ND	NC		
18.012	Application Menu 1 Read-write Integer 12 (used by Pump configuration: PID signal source)	-32768 to 32767	0	RW	Num				US
18.013	Application Menu 1 Read-write Integer 13 (used by Pump configuration: Regulation Hysteresis)	-32768 to 32767	0	RW	Num				US
18.014	Application Menu 1 Read-write Integer 14 (used by Pump configuration: Pump-off Condition Threshold)	-32768 to 32767	0	RW	Num				US
18.015	Application Menu 1 Read-write Integer 15 (used by Pump configuration: Overpressure Delay)	-32768 to 32767	0	RW	Num				US
18.016	Application Menu 1 Read-write Integer 16 (used by Pump configuration: Number of Back-up Pumps)	-32768 to 32767	0	RW	Num				US
18.017	Application Menu 1 Read-write Integer 17	-32768 to 32767	0	RW	Num				US
18.018	Application Menu 1 Read-write Integer 18 (used by Pump configuration: Minimum Speed)	-32768 to 32767	0	RW	Num				US
18.019	Application Menu 1 Read-write Integer 19 (used by Pump configuration: pump-off trip enable)	-32768 to 32767	0	RW	Num				US
18.020	Application Menu 1 Read-write Integer 20 (used by Pump configuration: Numerical Pressure Reference 1)	-32768 to 32767	0	RW	Num				US
18.021	Application Menu 1 Read-write Integer 21 (used by Pump configuration: Numerical Pressure Reference 2)	-32768 to 32767	0	RW	Num				US
18.022	Application Menu 1 Read-write Integer 22 (used by Pump configuration: Restart Pressure)	-32768 to 32767	0	RW	Num				US
18.023	Application Menu 1 Read-write Integer 23 (used by Pump configuration: Maximum value of the Pressure Feedback)	-32768 to 32767	0	RW	Num				US
18.024	Application Menu 1 Read-write Integer 24 (used by Pump configuration: Delay Before Back Up Pump Start)	-32768 to 32767	0	RW	Num				US
18.025	Application Menu 1 Read-write Integer 25 (used by Pump configuration: Delay Before Back up Pump stop)	-32768 to 32767	0	RW	Num				US

Parameter	Designation	Range	Default	Type					
18.026	Application Menu 1 Read-write Integer 26 (used by Pump configuration: Hydraulic Circuit Filling)	-32768 to 32767	0	RW	Num				US
18.027	Application Menu 1 Read-write Integer 27 (used by Pump configuration: Pump-off trip delay)	-32768 to 32767	0	RW	Num				US
18.028 to 18.030	Application Menu 1 Read-write Integer 28 to 30	-32768 to 32767	0	RW	Num				US
18.031	Application Menu 1 Read-write bit 31 (used by Pump configuration: back-up pump overpressure disable)	Off (0) or On (1)	Off (0)	RW	Bit				US
18.032	Application Menu 1 Read-write bit 32 (used by Pump configuration: Manual or automatic mode)	Off (0) or On (1)	Off (0)	RW	Bit				US
18.033	Application Menu 1 Read-write bit 33 (used by Pump configuration: Regulation run demand)	Off (0) or On (1)	Off (0)	RW	Bit				US
18.034	Application Menu 1 Read-write bit 34 (used by Pump configuration: Regulation run demand feedback)	Off (0) or On (1)	Off (0)	RW	Bit				US
18.035	Application Menu 1 Read-write bit 35	Off (0) or On (1)	Off (0)	RW	Bit				US
18.036	Application Menu 1 Read-write bit 36 (used by Pump configuration: Numerical reference select)	Off (0) or On (1)	Off (0)	RW	Bit				US
18.037	Application Menu 1 Read-write bit 37 (used by Pump configuration: Analog/Numerical Reference Select)	Off (0) or On (1)	Off (0)	RW	Bit				US
18.038	Application Menu 1 Read-write bit 38	Off (0) or On (1)	Off (0)	RW	Bit				US
18.039	Application Menu 1 Read-write bit 39 (used by Pump configuration: Restart Mode)	Off (0) or On (1)	Off (0)	RW	Bit				US
18.040	Application Menu 1 Read-write bit 40	Off (0) or On (1)	Off (0)	RW	Bit				US
18.041	Application Menu 1 Read-write bit 41 (used by Pump configuration: Back-up pump 1 command)	Off (0) or On (1)	Off (0)	RW	Bit				US
18.042	Application Menu 1 Read-write bit 42 (used by Pump configuration: Second Back Up Pump Command)	Off (0) or On (1)	Off (0)	RW	Bit				US
18.043	Application Menu 1 Read-write bit 43 (used by Pump configuration: Third Back Up Pump Command)	Off (0) or On (1)	Off (0)	RW	Bit				US
18.044 to 18.050	Application Menu 1 Read-write bit 44 to 50	Off (0) or On (1)	Off (0)	RW	Bit				US

To know more about the Pump configuration, please refer to *section 5.6.12, page 82*

6.2.16 - Menu 20 - Application Menu 2

Parameter	Designation	Range	Default	Type					
20.021	Application Menu 3 Read-write Long Integer 21	-2147483648 to 2147483647	0	RW	Num				
20.022	Application Menu 3 Read-write Long Integer 22	-2147483648 to 2147483647	0	RW	Num				
20.023	Application Menu 3 Read-write Long Integer 23	-2147483648 to 2147483647	0	RW	Num				
20.024	Application Menu 3 Read-write Long Integer 24	-2147483648 to 2147483647	0	RW	Num				
20.025	Application Menu 3 Read-write Long Integer 25	-2147483648 to 2147483647	0	RW	Num				
20.026	Application Menu 3 Read-write Long Integer 26	-2147483648 to 2147483647	0	RW	Num				
20.027	Application Menu 3 Read-write Long Integer 27	-2147483648 to 2147483647	0	RW	Num				
20.028	Application Menu 3 Read-write Long Integer 28	-2147483648 to 2147483647	0	RW	Num				
20.029	Application Menu 3 Read-write Long Integer 29 (used by Pump configuration: Pump program version 1)	-2147483648 to 2147483647	0	RW	Num				
20.030	Application Menu 3 Read-write Long Integer 30 (used by Pump configuration: Pump program version 2)	-2147483648 to 2147483647	0	RW	Num				

To know more about the Pump configuration, please refer to *section 5.6.12, page 82*.

6.2.17 - Menu 21 - Motor 2 Parameters

Parameter	Designation	Range	Default	Type					
21.001	M2 Maximum Speed	±VM_POSITIVE_REF_CLAMP Hz	50.00 Hz	RW	Num				US
21.002	M2 Minimum Speed	±VM_NEGATIVE_REF_CLAMP2 Hz	0.00 Hz	RW	Num				US
21.003	M2 Reference Selector	A1 A2 (0), A1 Preset (1), A2 Preset (2), Preset (3), Keypad (4), Reserved (5), Keypad Ref (6)	A1 A2 (0)	RW	Txt				US
21.004	M2 Acceleration Rate 1	±VM_ACCEL_RATE	5.0	RW	Num				US
21.005	M2 Deceleration Rate 1	±VM_ACCEL_RATE	10.0	RW	Num				US
21.006	M2 Motor Rated Frequency	0.00 to 150.00 Hz	50.00 Hz	RW	Num				US
21.007	M2 Motor Rated Current	±VM_RATED_CURRENT A	0.00 A	RW	Num		RA		US
21.008	M2 Motor Rated Speed	0.0 to 9000.0 rpm	1500.0 rpm	RW	Num				US
21.009	M2 Motor Rated Voltage	±VM_AC_VOLTAGE_SET V	200V drive: 230 V 400V drive :400 V	RW	Num		RA		US
21.010	M2 Motor Rated Power Factor	0.00 to 1.00	0.85	RW	Num		RA		US
21.011	M2 Number of Motor Poles	Automatic (0) to 32 (16) Poles	Automatic (0)	RW	Txt				US
21.012	M2 Stator Resistance	0.0000 to 99.9999 Ω	0.0000 Ω	RW	Num		RA		US
21.014	M2 Transient Inductance	0.000 to 500.000 mH	0.000 mH	RW	Num		RA		US
21.015	Motor 2 Active	Off (0) or On (1)		RO	Bit	ND	NC	PT	
21.016	M2 Motor Thermal Time Constant 1	1 to 3000 s	179 s	RW	Num				US
21.022	M2 Current Controller Kp Gain	0.00 to 4000.00	20.00	RW	Num				US
21.023	M2 Current Controller Ki Gain	0.000 to 600.000	40.000	RW	Num				US
21.024	M2 Stator Inductance	0.00 to 5000.00 mH	0.00 mH	RW	Num		RA		US
21.027	M2 Motoring Current Limit	±VM_MOTOR2_CURRENT_LIMIT %	165.0 %	RW	Num		RA		US
21.028	M2 Regenerating Current Limit	±VM_MOTOR2_CURRENT_LIMIT %	165.0 %	RW	Num		RA		US
21.029	M2 Symmetrical Current Limit	±VM_MOTOR2_CURRENT_LIMIT %	165.0 %	RW	Num		RA		US
21.033	M2 Low Frequency Thermal Protection Mode	0 or 1	0	RW	Num				US

NOTE

Motor 2 parameters menu can be used in the case the application needs 2 motor parameter sets. Motor rating parameters are identical but acceleration / deceleration rates or maximum speed for example may need to be different in the operating cycle of the application.

6.2.18 - Menu 22 - Menu 0 Setup

Parameter	Designation	Range	Default	Type					
22.001	Parameter 00.001 Set-up	0.000 to 30.999	1.007	RW	Num			PT	US
22.002	Parameter 00.002 Set-up	0.000 to 30.999	1.006	RW	Num			PT	US
22.003	Parameter 00.003 Set-up	0.000 to 30.999	2.011	RW	Num			PT	US
22.004	Parameter 00.004 Set-up	0.000 to 30.999	2.021	RW	Num			PT	US
22.005	Parameter 00.005 Set-up	0.000 to 30.999	11.034	RW	Num			PT	US
22.006	Parameter 00.006 Set-up	0.000 to 30.999	5.007	RW	Num			PT	US
22.007	Parameter 00.007 Set-up	0.000 to 30.999	5.008	RW	Num			PT	US
22.008	Parameter 00.008 Set-up	0.000 to 30.999	5.009	RW	Num			PT	US
22.009	Parameter 00.009 Set-up	0.000 to 30.999	5.010	RW	Num			PT	US
22.010	Parameter 00.010 Set-up	0.000 to 30.999	11.044	RW	Num			PT	US
22.011 to 22.029	Parameters 00.011 to 00.029 Set-up: dependent of the preset configuration selected by Pr 00.005	0.000 to 30.999	-	RW	Num			PT	US
22.030	Parameter 00.030 Set-up	0.000 to 30.999	2.004	RW	Num			PT	US
22.031	Parameter 00.031 Set-up	0.000 to 30.999	6.001	RW	Num			PT	US
22.032	Parameter 00.032 Set-up	0.000 to 30.999	5.013	RW	Num			PT	US
22.033	Parameter 00.033 Set-up	0.000 to 30.999	6.009	RW	Num			PT	US
22.034	Parameter 00.034 Set-up	0.000 to 30.999	1.010	RW	Num			PT	US
22.035	Parameter 00.035 Set-up	0.000 to 30.999	8.081	RW	Num			PT	US
22.036	Parameter 00.036 Set-up	0.000 to 30.999	0.000	RW	Num			PT	US
22.037	Parameter 00.037 Set-up	0.000 to 30.999	5.018	RW	Num			PT	US
22.038	Parameter 00.038 Set-up	0.000 to 30.999	5.012	RW	Num			PT	US
22.039	Parameter 00.039 Set-up	0.000 to 30.999	5.006	RW	Num			PT	US
22.040	Parameter 00.040 Set-up	0.000 to 30.999	5.011	RW	Num			PT	US
22.041	Parameter 00.041 Set-up	0.000 to 30.999	5.014	RW	Num			PT	US
22.042	Parameter 00.042 Set-up	0.000 to 30.999	5.015	RW	Num			PT	US
22.043	Parameter 00.043 Set-up	0.000 to 30.999	11.025	RW	Num			PT	US
22.044	Parameter 00.044 Set-up	0.000 to 30.999	11.023	RW	Num			PT	US
22.045	Parameter 00.045 Set-up	0.000 to 30.999	11.020	RW	Num			PT	US
22.046	Parameter 00.046 Set-up	0.000 to 30.999	12.042	RW	Num			PT	US
22.047	Parameter 00.047 Set-up	0.000 to 30.999	12.043	RW	Num			PT	US
22.048	Parameter 00.048 Set-up	0.000 to 30.999	12.044	RW	Num			PT	US
22.049	Parameter 00.049 Set-up	0.000 to 30.999	12.045	RW	Num			PT	US
22.050	Parameter 00.050 Set-up	0.000 to 30.999	12.046	RW	Num			PT	US
22.051	Parameter 00.051 Set-up	0.000 to 30.999	12.047	RW	Num			PT	US
22.052	Parameter 00.052 Set-up	0.000 to 30.999	12.040	RW	Num			PT	US
22.053	Parameter 00.053 Set-up	0.000 to 30.999	12.050	RW	Num			PT	US
22.054	Parameter 00.054 Set-up	0.000 to 30.999	12.051	RW	Num			PT	US
22.055	Parameter 00.055 Set-up	0.000 to 30.999	12.041	RW	Num			PT	US
22.056	Parameter 00.056 Set-up	0.000 to 30.999	10.020	RW	Num			PT	US
22.057	Parameter 00.057 Set-up	0.000 to 30.999	10.021	RW	Num			PT	US
22.058	Parameter 00.058 Set-up	0.000 to 30.999	10.022	RW	Num			PT	US
22.059	Parameter 00.059 Set-up	0.000 to 30.999	11.047	RW	Num			PT	US
22.060	Parameter 00.060 Set-up	0.000 to 30.999	11.048	RW	Num			PT	US
22.061	Parameter 00.061 Set-up	0.000 to 30.999	11.030	RW	Num			PT	US

Parameter	Designation	Range	Default	Type					
22.062	Parameter 00.062 Set-up	0.000 to 30.999	11.019	RW	Num			PT	US
22.063	Parameter 00.063 Set-up	0.000 to 30.999	11.018	RW	Num			PT	US
22.064	Parameter 00.064 Set-up	0.000 to 30.999	11.021	RW	Num			PT	US
22.065	Parameter 00.065 Set-up	0.000 to 30.999	0.000	RW	Num			PT	US
22.066	Parameter 00.066 Set-up	0.000 to 30.999	0.000	RW	Num			PT	US
22.067	Parameter 00.067 Set-up	0.000 to 30.999	0.000	RW	Num			PT	US
22.068	Parameter 00.068 Set-up	0.000 to 30.999	0.000	RW	Num			PT	US
22.069	Parameter 00.069 Set-up	0.000 to 30.999	5.040	RW	Num			PT	US
22.070	Parameter 00.070 Set-up	0.000 to 30.999	0.000	RW	Num			PT	US
22.071	Parameter 00.071 Set-up	0.000 to 30.999	0.000	RW	Num			PT	US
22.072	Parameter 00.072 Set-up	0.000 to 30.999	0.000	RW	Num			PT	US
22.073	Parameter 00.073 Set-up	0.000 to 30.999	0.000	RW	Num			PT	US
22.074	Parameter 00.074 Set-up	0.000 to 30.999	0.000	RW	Num			PT	US
22.075	Parameter 00.075 Set-up	0.000 to 30.999	0.000	RW	Num			PT	US
22.076	Parameter 00.076 Set-up	0.000 to 30.999	10.037	RW	Num			PT	US
22.077	Parameter 00.077 Set-up	0.000 to 30.999	11.032	RW	Num			PT	US
22.078	Parameter 00.078 Set-up	0.000 to 30.999	11.029	RW	Num			PT	US
22.079	Parameter 00.079 Set-up	0.000 to 30.999	0.000	RW	Num			PT	US
22.080	Parameter 00.080 Set-up	0.000 to 30.999	10.002	RW	Num			PT	US
22.071	Parameter 00.081 Set-up	0.000 to 30.999	1.001	RW	Num			PT	US
22.072	Parameter 00.082 Set-up	0.000 to 30.999	1.003	RW	Num			PT	US
22.073	Parameter 00.083 Set-up	0.000 to 30.999	3.001	RW	Num			PT	US
22.074	Parameter 00.084 Set-up	0.000 to 30.999	5.005	RW	Num			PT	US
22.075	Parameter 00.085 Set-up	0.000 to 30.999	5.001	RW	Num			PT	US
22.076	Parameter 00.086 Set-up	0.000 to 30.999	5.002	RW	Num			PT	US
22.077	Parameter 00.087 Set-up	0.000 to 30.999	5.004	RW	Num			PT	US
22.078	Parameter 00.088 Set-up	0.000 to 30.999	4.001	RW	Num			PT	US
22.079	Parameter 00.089 Set-up	0.000 to 30.999	4.002	RW	Num			PT	US
22.080	Parameter 00.090 Set-up	0.000 to 30.999	8.020	RW	Num			PT	US
22.081	Parameter 00.091 Set-up	0.000 to 30.999	1.011	RW	Num			PT	US
22.082	Parameter 00.092 Set-up	0.000 to 30.999	1.012	RW	Num			PT	US
22.083	Parameter 00.093 Set-up	0.000 to 30.999	0.000	RW	Num			PT	US
22.084	Parameter 00.094 Set-up	0.000 to 30.999	7.001	RW	Num			PT	US
22.085	Parameter 00.095 Set-up	0.000 to 30.999	7.002	RW	Num			PT	US

7 - TECHNICAL DATA

7.1 - Drive data

7.1.1 - Drive maximum output current ratings

Drive Size	230V supply 1ph / 3ph				400V supply 3ph			
	Drive Reference	Maximum Output current	Peak current 150% 60s	Peak current 180% 3s	Drive Reference	Maximum Output current	Peak current 150% 60s	Peak current 180% 3s
		(A)	(A)	(A)		(A)	(A)	(A)
1	12017	1.7	2.55	3.06	14012	1.2	1.8	2.16
	12024	2.4	3.6	4.32	14015	1.5	2.25	2.7
	12030	3.0	4.5	5.4	14018	1.8	2.7	3.24
	N/A				14021	2.1	3.15	3.78
					14025	2.5	3.75	4.5
					14030	3.0	4.5	5.4
					14033	3.3	4.95	5.94
2	22035	3.5	5.25	6.3	24042	4.2	6.3	7.56
	22052	5.2	7.8	9.36	24050	5.0	7.5	9
	22057	5.7	8.55	10.26	24070	7.0	10.5	12.6
	N/A				24085	8.5	12.75	15.3
3	32075*	7.5	11.25	13.5	34119	11.9	17.85	21.42
	32087*	8.7	13.05	15.66	34155	15.5	23.25	27.9
	32120*	12.0	18	21.6	N/A			
	32155*	15.5	23.25	27.9				

* 3ph model only

7.1.2 - De-ratings

The characteristics given above and in the installation and quick start commissioning guide are for 40 °C (104 °F), 1000 m altitude and 3 kHz switching frequency. De-rating can be required for higher switching frequencies, ambient temperature >40 °C (104 °F) and higher altitude. For applications outside the standard levels, please contact Leroy-Somer.

7.1.3 - Braking

Braking occurs when the drive is decelerating the motor, or is preventing the motor from gaining speed due to mechanical influences. During braking, energy is returned to the drive from the motor.
If the drive is expected to rapidly decelerate a load, or to hold back an overhauling load, a braking resistor must be installed.

Three optional braking resistors are available for the Commander ID300/302. These dedicated braking resistors have thermal protection included. See the table below for their ratings and associated parameter settings.

Drive size	Braking resistor reference	Power (W)	Resistance value (Ω)	Pr 10.030	Pr 10.031	Pr 10.061
1	ID-SIZE1-DBR	200	400	0.2	36	400
2	ID-SIZE2-DBR		200	0.2	36	200
3	ID-SIZE3-DBR		100	0.2	42	100

WARNING
If an optional braking resistor is fitted to the drive, the required resistor protection is set at factory. If drive default parameter values are restored, Pr 10.030, 10.031 and 10.061 are set back to their default values. In that case, you should set the right values again to protect the braking resistor.

In the case these optional resistors do not match with the application, another external braking resistor can be connected. For more information, please contact Leroy-Somer.

WARNING
When an external braking resistor is used, it is essential that an overload protection device is incorporated in the braking resistor circuit.

Drive size	Minimum resistance value of the braking resistor (Ω)	
	200V model	400V model
1	180	360
2	90	180
3	40	80

7.2 - EMC (Electromagnetic compatibility)

The product is designed to comply with international standards in a typical installation.
If the installation is poorly designed or other equipment does not comply with international standards for EMC, the product might cause or suffer from disturbance due to electromagnetic interaction with other equipment. It is the responsibility of the installer to ensure that the equipment or system into which the product is incorporated complies with the relevant EMC legislation in the country of use.

Within the European Union, equipment into which this product is incorporated must comply with the Electromagnetic Compatibility Directive 2014/30/EU.

If particularly sensitive equipment is to be used nearby, or in a non-industrial environment, then the recommendations of Compliance with IEC 61800-3 (EN 61800-3:2004+A1:2012 standard for Power Drive Systems) or Compliance with generic emission standards should be followed to give reduced radio-frequency emission.

• As the leakage current is high, a permanent fixed ground connection must be provided or other suitable measures taken to prevent a safety hazard occurring if the connection is lost.
• The Commander ID300/302 integrates an in-built EMC filter, but there is no possibility to disconnect it. If the ground leakage current is unacceptable for the user, please contact Leroy-Somer.

NOTE
The installer of the drive is responsible for ensuring compliance with the EMC regulations that apply in the country in which the drive is to be used.

7.2.1 - Immunity compliance

Standard	Type of immunity	Test specification	Application	Level
IEC 61000-4-2 EN61000-4-2:2009	Electrostatic discharge	6 kV contact discharge 8 kV air discharge	Module enclosure	Level 3 (industrial)
IEC 61000-4-3 EN61000-4-3:2006+A2:2010	Radio frequency radiated field	10 V/m prior to modulation 80 - 1000 MHz 80 % AM (1 kHz) modulation	Module enclosure	Level 3 (industrial)
IEC61000-4-4 EN61000-4-4:2012	Fast transient burst	5/50 ns 2 kV transient at 5 kHz repetition frequency via coupling clamp	Control lines	Level 4 (industrial harsh)
		5/50 ns 2 kV transient at 5 kHz repetition frequency by direct injection	Power lines	Level 3 (industrial)
IEC61000-4-5 EN61000-4-5:2014	Surges	Common mode 4 kV 1.2/50 µs waveshape	AC supply lines: line to ground	Level 4
		Differential mode 2 kV1.2/50 µs waveshape	AC supply lines: line to line	Level 3
		Lines to ground	Signal ports to ground	Level 2
IEC61000-4-6 EN61000-4-6:2014	Conducted radio frequency	10V prior to modulation 0.15 - 80 MHz 80 % AM (1 kHz) modulation	Control and power lines	Level 3 (industrial)
IEC61000-4-11 EN61000-4-11:2004	Voltage dips and interruptions	-30 % 10 ms +60 % 100 ms -60 % 1 s <-95 % 5 s	AC power ports	-

Standard	Type of immunity	Test specification	Application	Level
IEC61000-6-1 EN61000-6-1:2007	Generic immunity standard for the residential, commercial and light - industrial environment		-	Complies
IEC61000-6-2 EN61000-6-2:2005	Generic immunity standard for the industrial environment			Complies
IEC61800-3 EN 61800-3: 2004+A1:2012	Product standard for adjustable speed power drive systems (immunity requirements)		Meets immunity requirements for first and second environments	

7.2.2 - Emission

The 2004 revision of IEC 61800-3 and EN 61800-3: 2004+A1:2012 uses different terminology to align the requirements of the standard better with the EC EMC Directive.

Power drive systems are categorized C1 to C4:

Category	Definition
C1	Intended for use in the first or second environments
C2	Not a plug-in or movable device, and intended for use in the first environment only when installed by a professional, or in the second environment
C3	Intended for use in the second environment, not the first environment
C4	Intended for use in the second environment in a system rated at over 400 A, or in a complex system

NOTE

- The first environment is one that includes residential premises. It also includes establishments directly connected without intermediate transformers to a low-voltage power supply network which supplies buildings used for residential purposes.
- The second environment is one that includes all establishments other than those directly connected to a low-voltage power supply network which supplies buildings used for residential purposes.

The drive contains an in-built filter for basic emission control. An additional optional filter provides further reduction of emission. The requirements of the standards are met, depending on the switching frequency.

Conformity conditions according to the switching frequency (Pr 05.018 / 00.037)								
EMC filter	**Drive size**	**2 kHz**	**3 kHz**	**4 kHz**	**6 kHz**	**8 kHz**	**12 kHz**	**16 kHz**
In-built	**1 & 2**	C3		-				
	3	C3					-	
Optional	**1 to 3**	C1						

7.3 - Safe Torque Off (STO) function of Commander ID302

The Safe Torque Off function provides a means for preventing the drive from generating torque in the motor, with a very high level of integrity. It is suitable for incorporation into a safety system for a machine. It is also suitable for use as a conventional drive enable input.

The Safe Torque Off function makes use of the special property of an inverter drive with an induction motor, which is that torque cannot be generated without the continuous correct active behaviour of the inverter circuit. All credible faults in the inverter power circuit cause a loss of torque generation.
Most component failures are revealed by the drive failing to operate. Safe Torque Off is also independent of the drive firmware.

The Commander ID302 integrates a dual channel STO (two fully independent channels).
If either or both inputs are set at a logic low state, there are no single faults in the drive which can permit the motor to be driven.

The function is defined according to EN 61800-5-2 and IEC 61800-5-2.
It is not necessary to use both channels to meet the requirements of the standards. The purpose of the two channels is to allow connection to machine safety systems where two channels are required, and to facilitate protection against wiring faults.
For example, if each channel is connected to a safety-related digital output of a safety related controller, computer or PLC, then on detection of a fault in one output, the drive can still be disabled safely through the other output.
Under these conditions, there are no single wiring faults which can cause a loss of the safety function, i.e. inadvertent enabling of the drive.

The Safe Torque Off function of the Commander ID302 has been independently assessed by Notified Body, TüV Rheinland for use as a safety component of a machine.

The safety function "Safe Torque Off" complies with the requirements of SIL CL 3 according to IEC 61800-5-2/ IEC 62061/ IEC 61508, and Cat 4. / PL e according to EN ISO 13849-1 and can be used in applications up to these safety levels.

It is confirmed that the product tested complies with the requirements for machines defined in Annex I of the EC Directive 2006/42/EC.

This certificate is available on request.

According to IEC 61800-5-2/ IEC 62061/ IEC 61508

Type	Value
Safety Integrity level	3
Proof test interval 20 years	20 years
High demand or a continuous mode of operation	
PFH (1/h)	2.77×10^{-10}
Low demand mode of operation (not EN 61800-5-2)	
PFDavg	2.43×10^{-5}

According to EN ISO 13849-1

Type	Value	Classification
Category	4	
Performance Level (PL)	e	
MTTFD (ST01)	484 years	High
MTTFD (ST02)	412 years	High
DCavg	≥99 %	High
Mission time	20 years	

NOTE

• Logic levels comply with IEC 61131-2:2007 for type 1 digital inputs rated at 24 V. Maximum level for logic low to achieve SIL3 and PL e 5 V and 0.5 mA.

• In the event that the two-channel operation is not required, the two inputs can be connected together to form a single Safe Torque Off input.
In this case it is important to note that a single short-circuit from the Safe Torque Off input to a DC supply > 5 V could cause the drive to be enabled.
This might occur through a fault in the wiring. This can be excluded according to EN ISO 13849-2 by the use of protected wiring. The wiring can be protected by either of the following methods:
• By placing the wiring in a segregated cable duct or other enclosure.
or
• By providing the wiring with a grounded shield in a positive-logic grounded control circuit. The shield is provided to avoid a hazard from an electrical fault. It may be grounded by any convenient method; no special EMC precautions are required.

Note on response time of Safe Torque Off, and use with safety controllers with self-testing outputs:
Safe Torque Off has been designed to have a response time of greater than 1 ms so that it is compatible with safety controllers whose outputs are subject to a dynamic test with a pulse width not exceeding 1 ms.

The design of safety-related control systems must only be done by personnel with the required training and experience.
The Safe Torque Off function will only ensure the safety of a machine if it is correctly incorporated into a complete safety system. The system must be subject to a risk assessment to confirm that the residual risk of an unsafe event is at an acceptable level for the application.
Safe Torque Off does not provide electrical isolation. The supply to the drive must be disconnected by an approved isolation device before gaining access to power connections.
Safe Torque Off inhibits the operation of the drive, this includes inhibiting braking. If the drive is required to provide both braking and Safe Torque Off in the same operation (e.g. for emergency stop) then a safety timer relay or similar device must be used to ensure that the drive is disabled a suitable time after braking. The braking function in the drive is provided by an electronic circuit which is not fail-safe. If braking is a safety requirement, it must be supplemented by an independent fail-safe braking mechanism.
It is essential to observe the maximum permitted voltage of 5 V for a safe low (disabled) state of Safe Torque Off. The connections to the drive must be arranged so that voltage drops in the 0V wiring cannot exceed this value under any loading condition. It is strongly recommended that the Safe Torque Off circuits be provided with a dedicated 0V conductors which should be connected to terminals 32 et 33.

Safe Torque Off over-ride
The drive does not provide any facility to over-ride the Safe Torque Off function, for example for maintenance purposes.

7.4 - EIA 485 serial communication

EIA 485 Serial communication is via the RJ45 connector located either in ID-3 CABLE-RJ45-FLANGE option flange, or near to the terminal blocks of the drive. The drive only supports Modbus RTU protocol. The communications port applies a 1.25 unit load to the communications network.

For port pin-outs of the RJ45, please refer to the table below.

Pin	Function
1	120 Ω Termination resistor
2	RX TX
3	0 V
4	+24 V (100 mA) output
5	Not connected
6	TX enable
7	RX\ TX\
8	RX\ TX\ (if termination resistors are required, link to pin 1)

An external USB hardware interface such as a PC cannot be used directly with the 2-wire EIA485 interface of the drive. Therefore a suitable converter is required.
An USB to EIA485 isolated converter is available as an option: USB/RS485 cable.

When using the above converter or any other suitable converter with the drive, it is recommended that no terminating resistors be connected on the network. It may be necessary to 'link out' the terminating resistor within the converter depending on which type is used. The information on how to link out the terminating resistor will normally be contained in the user information supplied with the converter.

The following parameters need to be set according to the system requirements.

Parameter	Range	Details
Serial Address Pr **11.023**	1 to 247	This parameter defines the serial address (between 1 and 247 are permitted).
Serial Mode Pr **11.024**	8 2 NP (0), to 7 1 OP M (11)	The drive is always a slave. This parameter defines the supported data formats used by the 485 comms port on the drive. It can be changed via the drive keypad or via the comms interface itself.
Serial Baud Rate Pr **11.025**	300 (0), to 115200 (10)	This parameter can be changed via the drive keypad or via the comms interface itself. If it is changed via the comms interface, the response to the command uses the original baud rate. The master should wait at least 20 ms before sending a new message using the new baud rate.

7.5 - Control word and status word

7.5.1 - Control word

Drive commands can be managed by setting one parameter only: Pr **06.042** Control word, a 15-bit parameter.

Each bit of this parameter matches with a drive command parameter. The function is enabled when the bit is set to 1 and disabled when it is set to 0.
First before controlling the drive with Pr **06.042**, it is necessary to set Pr **06.043** to 1 to enable the function (terminal commands are not active anymore).

Pr 06.042 Bit	Corresponding parameter or function
0	Drive Enable (Pr **06.015**)
1	Run Forward (Pr **06.030**)
2	Jog Forward (Pr **06.031**)
3	Run Reverse (Pr **06.032**)
4	Forward/Reverse (Pr **06.033**)
5	Run (Pr **06.034**)
6	Not Stop (Pr **06.039**)
7	Auto / manual
8	Analog / Preset reference
9	Jog Reverse (Pr **06.037**)
10	Not used
11	Not used
12	Trip drive
13	Reset drive
14	Watchdog

Bits 0-7 and bit 9: Sequencer control
When Auto/manual bit7 = 1, then bits 0 to 6 and bit 9 of the Control Word Pr **06.042** become active. The equivalent parameters are not modified by these bits, but become inactive. When the bits are active, they replace the functions of the equivalent parameters.

Bit 8: Analogue/preset reference
The state of Analogue/Preset Reference bit 8 is written continuously to Reference Select Flag 2 (Pr **01.042**). With default drive settings (i.e. Reference Selector Pr **01.014** = 0), this selects Analog Reference 1 Pr **01.036** when bit 8 = 0 or Preset Reference 1 Pr **01.021** when bit 8 = 1. If any other drive parameters are routed to Reference Select Flag 2 Pr **01.042**, the value of this parameter is undefined.

Bit 10 and bit 11: Not used
The values of these bits have no effect on the drive.

Bit 12: Trip drive
If bit 12 = 1, then a Control Word trip is repeatedly initiated. The trip cannot be cleared until bit 12 = 0.

Bit 13: Reset drive
If bit 13 is changed from 0 to 1, a drive reset is initiated. Bit 13 does not modify Drive Reset Pr **10.033**.

Bit 14: Watchdog
A watchdog system can be enabled or serviced each time bit 14 is changed from 0 to 1. Once bit 14 has been changed from 0 to 1 to enable the watchdog, this must be repeated every 1s or else a Watchdog trip will be initiated. The watchdog is disabled when the trip occurs and must be re-enabled if required when the trip is reset.

7.5.2 - Status word

Drive status information can be known in one parameter only: Pr **10.040** Status word, a 15-bit parameter.
Each bit of this parameter matches with a drive status parameter. The bits in Status Word mirror the status bit parameters as shown below.
Where the parameters do not exist in any mode, the bit remains at zero.

Pr 10.040 Bit	Corresponding parameter
0	Drive Healthy Pr **10.001**
1	Drive Active Pr **10.002**
2	Zero Frequency Pr **10.003**
3	Running At Or Below Minimum Frequency Pr **10.004**
4	Below Set Frequency Pr **10.005**
5	At Frequency Pr **10.006**
6	Above Set Frequency Pr **10.007**
7	Rated Load Reached Pr **10.008**
8	Current Limit Active Pr **10.009**
9	Regenerating Pr **10.010**
10	Braking IGBT Active Pr **10.011**
11	Braking Resistor Alarm Pr **10.012**
12	Reverse Direction Commanded Pr **10.013**
13	Reverse Direction Running Pr **10.014**
14	Supply Loss Pr **10.015**

7.6 - Onboard PLC

The Commander ID300/302 has the ability to store and execute a 12 kB Onboard PLC user program without the need for additional hardware in the form of an option module.
Machine Control Studio is an IEC61131-3 development environment designed for use with Commander ID300/302.
Machine Control Studio is based on CODESYS from 3S-Smart Software Solutions.
All of the programming languages defined in the IEC standard IEC 61131-3 are supported in the Machine Control Studio development environment.
• ST (Structured text)
• LD (Ladder diagram)
• FBD (Function block diagram)
• IL (Instruction list)
• SFC (Sequential function chart)
• CFC (Continuous Function Chart).

CFC is an extension to the standard programming languages. Machine Control Studio provides a complete environment for the development of user programs. Programs can be created, compiled and downloaded to a Commander ID300/302 for execution, via the communications port. The run-time operation of the compiled program on the target can also be monitored using Machine Control Studio and facilities are provided to interact with the program on the target by setting new values for target variables and parameters.

Machine Control Studio can be downloaded from
www.commander ID300.info.
See the Machine Control Studio help file for more information regarding using Machine Control Studio, creating user programs and downloading user programs to the drive.

• Benefits
The combination of the Onboard PLC and Machine Control Studio, means that the drive can replace nano and some micro PLCs in many applications. Machine Control Studio benefits from access to the standard CODESYS function and function block libraries as well as those from third parties.
Functions and function blocks available as standard in Machine Control Studio include, but not limited to, the following:
• Arithmetic blocks
• Comparison blocks
• Timers
• Counters
• Multiplexers
• Latches
• Bit manipulation
Typical applications for the Onboard PLC include:
• Ancillary pumps
• Fans and control valves
• Interlocking logic
• Sequence routines
• Custom control words.

• Tasks
The Onboard PLC allows use of two tasks.

• Clock: A high priority real time task. The clock task interval can be set from 16 ms to 262 s in multiples of 16 ms. The parameter Onboard User Program: Clock Task Time Used Pr **11.051** shows the percentage of the available time used by clock task. A read or write of a drive parameter by the user program takes a finite period of time. It is possible to select up to 10 parameters as fast access parameter which reduced the amount of time it takes for the user program to read from or write to a drive parameter.

This is useful when using a clock task with a fast update rate as selecting a parameter for fast access reduces the amount of the clock task resource required to access parameters.

• Freewheeling: A non-real time background task. The freewheeling task is scheduled for a short period once every 256 ms. The time for which the task is scheduled will vary depending on the loading of the drive's processor. When scheduled, several scans of the user program may be performed. Some scans may execute in microseconds. However, when the main drive functions are scheduled there will be a pause in the execution of the program causing some scans to take many milliseconds. The parameter Onboard User Program: Freewheeling Tasks Per Second Pr **11.050** shows the number of times the freewheeling task has started per second.

• Variables
The Onboard PLC supports the use of variables with the data types of Boolean, integer (8 bit, 16 bit and 32 bit, signed and unsigned), floating point (64 bit only), strings and time.

• Custom menu
Machine Control Studio can construct a custom drive menu to reside in menu 30 on the drive. The following properties of each parameter can be defined using Machine Control Studio:
• Parameter name
• Number of decimal places
• The units for the parameter to be display on the keypad.
• The minimum, maximum and default values
• Memory handling (i.e. power down save, user save or volatile)
• Data type. The drive provides a limited set of 1 bit, 8 bit, 16 bit and 32 bit integer parameters to create the customer menu.
Parameters in this customer menu can be accessed by the user program and will appear on the keypad.

• Limitations
The Onboard PLC user program has the following limitations:
• The flash memory allocated to the Onboard PLC is about 12 kB.
• The Onboard PLC is provided with 2 kB of RAM.
• The drive is rated for 100 program downloads. This limitation is imposed by the flash memory used to store the program within the drive.
• There is only one real-time task with a minimum period of 16 ms.
• The freewheeling background task runs at a low priority. The drive is prioritized to perform the clock task and its major functions first, e.g. motor control, and will use any remaining processing time to execute the freewheeling task as a background activity. As the drive's processor becomes more heavily loaded, less time is spent executing the freewheeling task.
• Breakpoints, single stepping and online program changes are not possible.
• The Graphing tool is not supported.
• The variable data types REAL (32 bit floating point), LWORD (64 bit integer) and WSTRING (Unicode string), and retained variables are not supported.

• Onboard PLC parameters
The following parameters are associated with the Onboard PLC user program.

11.047 (00.059)	**Onboard User Program: Enable**			
Read-Write	↕	Stop (0) or Run (1)	→	Run (1)

This parameter stops and starts the user program.

Value	Description
0	The onboard user program is stopped.
1	The user program will execute. Background task starts from the beginning.

11.048 (00.060)	**Onboard User Program: Status**			
Read-Only	↕	-2147483648 to 2147483647	→	-

This parameter indicates the status of the user program in the drive. The user program writes the value to this parameter.

Value	Description
0	Stopped
1	Running
2	Exception
3	No user program present

11.049	**Onboard User Program: Programming Events**			
Read-Only	↕	0 to 65535	→	-

This parameter holds the number of times an Onboard PLC user program download has taken place (it is 0 on dispatch from the factory).
The drive is rated for one hundred program downloads. This parameter is not altered when defaults are loaded.

11.050	**Onboard User Program: Freewheeling Tasks Per Second**			
Read-Only	↕	0 to 65535	→	-

This parameter shows the number of times the freewheeling task has started per second.

11.051	**Onboard User Program: Clock Task Time Used**			
Read-Only	↕	0.0 to 100.0 %	→	-

This parameter shows the percentage of the available time used by the user program clock task.

11.055	**Onboard User Program: Clock Task Scheduled Interval**			
Read-Only	↕	0 to 262128 ms	→	-

This parameter shows the interval at which the clock task is scheduled to run at in ms.

• Onboard PLC trips
If the drive detects an error in the user program, it will initiate a User Program trip.
The sub-trip number for the User Program trip details the reason for the error. See *section 8, page 135* for more information on the User Program trip.

7.7 - Low DC bus capacitance

Unlike other Nidec drives, the Commander ID300/302 has a low DC bus capacitance (film capacitors) which increases lifetime and optimizes the compactness of the product.

Due to this low capacitance (around 20µF on 400V size 1 and 2 products and 80µF on 400V size 3 products), some phenomena may occur during the commissioning of the drive. See below for details with remedies.

• Low capability of energy storage / DC bus voltage can increase faster

For some applications with medium or high inertia (inertia ratio between motor and load around 4), it is recommended to implement a braking resistor or increase the deceleration time (due to fast DC bus voltage increasing).
If a braking resistor cannot be used, the deceleration time under stop mode can be reduced using DC injection braking (see Pr **06.006**, Pr **06.007** and Pr **06.011**).

• With no load conditions and for some motor and drive combinations, the motor could be unstable (voltage ripple on the DC bus) depending on the switching frequency, IGBT deadtime, DC bus, motor impedance or internal resistance of the drive.

In the first instance, do not try to set current controller gains (Pr **04.013**, Pr **04.014**). In most cases, Dynamic V/F function solves the issue (Pr **05.013(00.032)** = 1, which is the default setting of the Commander ID300/302). Under no load condition, the nominal voltage applied to the motor is equal to Pr **05.009(00.008)**/2.

For more dynamic applications (spindle tool machine for example), it is advisable to:

- set Pr **05.013(00.032)** to 0,
- set switching frequency to the minimum value if possible Pr **05.018(00.037)** = 2 kHz
- decrease the nominal voltage applied to the motor if the settings above are not sufficient to improve the situation.

If the motor is instable (no load) and Pr 02.004(00.030) = Standard(1), DC regulation can increase the motor speed up to its rated value.

• Example of typical unstable zones for an induction motor with no load condition

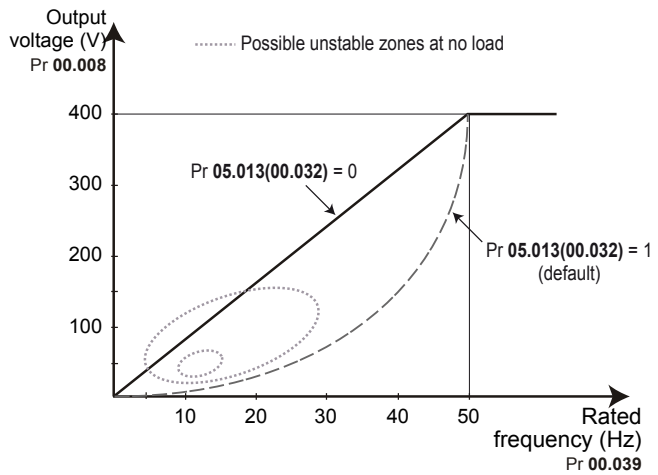

7.8 - Modbus RTU specification

This section describes the adaptation of the MODBUS RTU protocol offered on Commander ID300/302. The portable software class which implements this protocol is also defined.
MODBUS RTU is a master slave system with half-duplex message exchange. The implementation supports the core function codes to read and write registers. A scheme to map between MODBUS registers and Commander ID300/302 parameters is defined. The implementation also defines a 32 bit extension to the standard 16 bit register data format.

7.8.1 - MODBUS RTU

Physical layer

Attribute	Description
Normal physical layer for multi-drop operation	EIA485 2 wire
Bit stream	Standard UART asynchronous symbols with Non Return to Zero (NRZ)
Symbol	Each symbol consists of: 1 start bit 8 data bits (transmitted least significant bit first) 2 stop bits*
Baud rates	600, 1200, 2400, 4800, 9600, 19200, 38400, 57600, 76800, 115200

* The drive will accept a packet with 1 or 2 stop bits but will always transmit 2 stop bits.

RTU framing

The frame has the following basic format:

SLAVE ADDRESS	FUNCTION CODE	Message data	16bit CRC	Silent interval

The frame is terminated with a minimum silent period of 3.5 character times (for example, at 19200 baud the minimum silent period is 2 ms). Nodes use the terminating silence period to detect the end of frame and begin frame processing. All frames must therefore be transmitted as a continuous stream without any gaps greater or equal to the silence period. If an erroneous gap is inserted then receiving nodes may start frame processing early in which case the CRC will fail and the frame will be discarded.
MODBUS RTU is a master slave system. All master requests, except broadcast requests, will lead to a response from an individual slave. The slave will respond (i.e. start transmitting the response) within the quoted maximum slave response time. The minimum slave response time is also quoted but will never be less that the minimum silent period defined by 3.5 character times.
If the master request was a broadcast request then the master may transmit a new request once the maximum slave response time has expired.
The master must implement a message time out to handle transmission errors. This time out period must be set to the maximum slave response time + transmission time for the response.

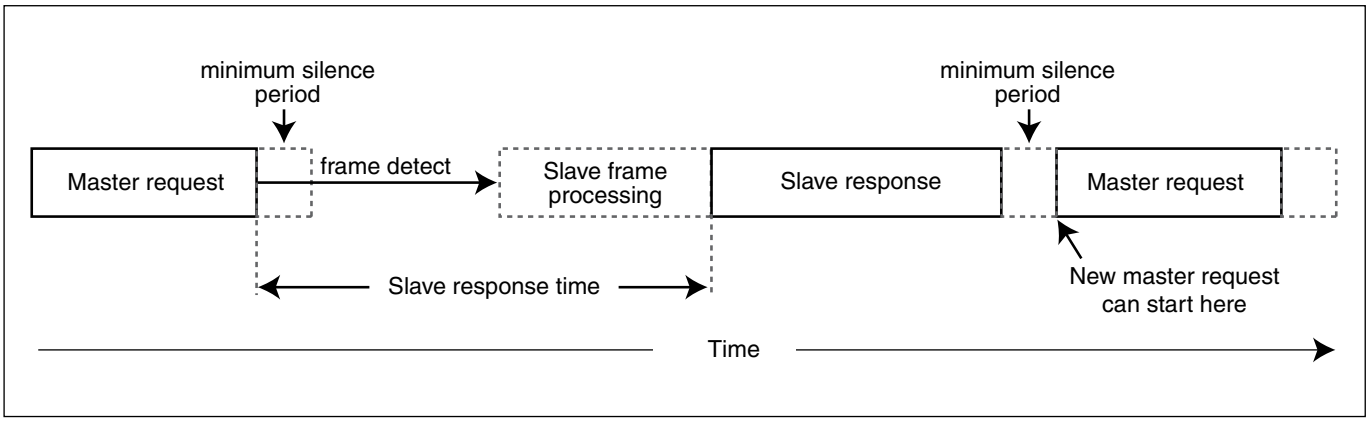

7.8.2 - Slave address

The first byte of the frame is the slave node address. Valid slave node addresses are 1 through 247 decimal. In the master request this byte indicates the target slave node; in the slave response this byte indicates the address of the slave sending the response.

Global addressing
Address zero addresses all slave nodes on the network. Slave nodes suppress the response messages for broadcast requests.

7.8.3 - MODBUS registers

The MODBUS register address range is 16 bit (65536 registers) which at the protocol level is represented by indexes 0 through 65535.

PLC registers
Modicon PLCs typically define 4 register 'files' each containing 65536 registers. Traditionally, the registers are referenced 1 through 65536 rather than 0 through 65535. The register address is therefore decremented on the master device before passing to the protocol.

File type	Description
1	Read only bits ("coil")
2	Read / write bits ("coil")
3	Read only 16bit register
4	Read / write 16bit register

The register file type code is NOT transmitted by MODBUS and all register files can be considered to map onto a single register address space. However, specific function codes are defined in MODBUS to support access to the "coil" registers.

All standard Leroy-Somer drive parameters are mapped to register file '4' and the coil function codes are not required.

CT parameter mapping
The Modbus register address is 16 bits in size, of which the upper two bits are used for data type selection leaving 14 bits to represent the parameter address, taking into account the slave increments the address value by 1, this results in a theoretical maximum parameter address of 163.84 (limited to 162.99 in software) when the default standard addressing mode (see Serial Mode Pr **11.024**) is used.
To access a parameter number above 99 in any drive menu then the modified addressing mode must be used (see Serial Mode Pr **11.024**), this will allow access to parameter numbers up to 255 but also limit the maximum menu number to 63.
The Modbus slave device increments the register address by 1 before processing the command, this effectively prevents access to parameter Pr **00.000** in the drive or option module.

The table below shows how the start register address is calculated for both addressing modes.

Parameter	Addressing mode	Protocol register			
0.mm.ppp	Standard	mm x 100 + ppp - 1			
	Modified	mm x 256 + ppp - 1			
Examples					
		16-bit		**32-bit**	
		Decimal	**Hex (0x)**	**Decimal**	**Hex (0x)**
0.01.021	Standard	120	00 78	16504	40 78
	Modified	276	01 14	16660	41 14
0.01.000	Standard	99	00 63	16483	40 63
	Modified	255	00 FF	16639	40 FF
0.03.161	Standard	N/A	N/A	N/A	N/A
	Modified	928	03 A0	17312	43 A0

Data types
The MODBUS protocol specification defines registers as 16 bit signed integers. All Leroy-Somer devices support this data size.

7.8.4 - Data consistency

All Leroy-Somer devices support a minimum data consistency of one parameter (16 bit or 32 bit data). Some devices support consistency for a complete multiple register transaction.

7.8.5 - Data encoding

MODBUS RTU uses a 'big-endian' representation for addresses and data items (except the CRC, which is 'little-endian'). This means that when a numerical quantity larger than a single byte is transmitted, the MOST significant byte is sent first. So for example:

16 - bits 0x1234 would be 0x12 0x34
32 - bits 0x12345678 would be 0x12 0x34 0x56 0x78

7.8.6 - Function codes

The function code determines the context and format of the message data. Bit 7 of the function code is used in the slave response to indicate an exception.
The following function codes are supported:

Code	Description
3	Read multiple 16 bit registers
6	Write single register
16	Write multiple 16 bit registers
23	Read and write multiple 16 bit registers

FC03 Read multiple
Read a contiguous array of registers. The slave imposes an upper limit on the number of registers, which can be read. If this is exceeded the slave will issue an exception code 2.

Master request

Byte	Description
0	Slave destination node address 1 through 247, 0 is global
1	Function code 0x03
2	Start register address MSB
3	Start register address LSB
4	Number of 16 bit registers MSB
5	Number of 16 bit registers LSB
6	CRC LSB
7	CRC MSB

Slave response

Byte	Description
0	Slave source node address
1	Function code 0x03
2	Length of register data in read block (in bytes)
3	Register data 0 MSB
4	Register data 0 LSB
3+byte count	CRC LSB
4+byte count	CRC MSB

FC06 Write single register
Writes a value to a single 16 bit register. The normal response is an echo of the request, returned after the register contents have been written. The register address can correspond to a 32 bit parameter but only 16 bits of data can be sent.

Master request

Byte	Description
0	Slave node address 1 through 247, 0 is global
1	Function code 0x06
2	Register address MSB
3	Register address LSB
4	Register data MSB
5	Register data LSB
6	CRC LSB
7	CRC MSB

Slave response

Byte	Description
0	Slave source node address
1	Function code 0x06
2	Register address MSB
3	Register address LSB
4	Register data MSB
5	Register data LSB
6	CRC LSB
7	CRC MSB

FC16 Write multiple
Writes a contiguous array of registers. The slave imposes an upper limit on the number of registers which can be written. If this is exceeded the slave will discard the request and the master will time out.

Master request

Byte	Description
0	Slave node address 1 through 247, 0 is global
1	Function code 0x10
2	Start register address MSB
3	Start register address LSB
4	Number of 16 bit registers MSB
5	Number of 16 bit registers LSB
6	Length of register data to write (in bytes)
7	Register data 0 MSB
8	Register data 0 LSB
7+byte count	CRC LSB
8+byte count	CRC MSB

Slave response

Byte	Description
0	Slave source node address
1	Function code 0x10
2	Start register address MSB
3	Start register address LSB
4	Number of 16 bit registers written MSB
5	Number of 16 bit registers written LSB
6	CRC LSB
7	CRC MSB

FC23 Read/Write multiple

Writes and reads two contiguous arrays of registers. The slave imposes an upper limit on the number of registers which can be written. If this is exceeded the slave will discard the request and the master will time out.

Master request

Byte	Description
0	Slave node address 1 through 247, 0 is global
1	Function code 0x17
2	Start register address to read MSB
3	Start register address to read LSB
4	Number of 16 bit registers to read MSB
5	Number of 16 bit registers to read LSB
6	Start register address to write MSB
7	Start register address to write LSB
8	Number of 16 bit registers to write MSB
9	Number of 16 bit registers to write LSB
10	Length of register data to write (in bytes)
11	Register data 0 MSB
12	Register data 0 LSB
11+byte count	CRC LSB
12+byte count	CRC MSB

Slave response

Byte	Description
0	Slave source node address
1	Function code 0x17
2	Length of register data in read block (in bytes)
3	Register data 0 MSB
4	Register data 0 LSB
3+byte count	CRC LSB
4+byte count	CRC MSB

7.8.7 - Extended data types

Standard MODBUS registers are 16bit and the standard mapping maps a single #X.Y parameter to a single MODBUS register. To support 32 bit data types (integer and float) the MODBUS multiple read and write services are used to transfer a contiguous array of 16bit registers.

Slave devices typically contain a mixed set of 16 bit and 32 bit registers. To permit the master to select the desired 16 bit or 32 bit access the top two bits of the register address are used to indicate the selected data type.

NOTE

The selection is applied for the whole block access.

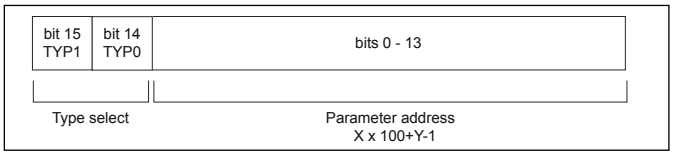

The 2bit type field selects the data type according to the table below:

Type field bits 15-14	Selected data type	Comments
00	INT16	backward compatible
01	INT32	
10	Float32	IEEE754 standard Not supported on all slaves
11	Reserved	

If a 32 bit data type is selected then the slave uses two consecutive 16 bit MODBUS registers (in 'big endian'). The master must also set the correct 'number of 16 bit registers'.
Example, read Pr **20.021** through Pr **20.024** as 32 bit parameters using FC03 from node 8:

Master request

Byte	Value	Description
0	0x08	Slave destination node address
1	0x03	FC03 multiple read
2	0x47	Start register address Pr 20.021 (16384 + 2021 - 1) = 18404 = 0x47E4
3	0xE4	
4	0x00	Number of 16bit registers to read Pr **20.021** through Pr **20.024** is 4x32 bit registers = 8x16 bit registers
5	0x08	
6	CRC LSB	
7	CRC MSB	

Slave response

Byte	Value	Description
0	0x08	Slave destination node address
1	0x03	FC03 multiple read
2	0x10	Length of data (bytes) = 4x32 bit registers = 16 bytes
3-6		Pr **20.021** data
7-10		Pr **20.022** data
11-14		Pr **20.023** data
15-18		Pr **20.024** data
19	CRC LSB	
20	CRC MSB	

Reads when actual parameter type is different from selected

The slave will send the least significant word of a 32 bit parameter if that parameter is read as part of a 16 bit access.

The slave will sign extend the least significant word if a 16 bit parameter is accessed as a 32 bit parameter. The number of 16 bit registers must be even during a 32 bit access.

Example, If Pr **01.028** is a 32 bit parameter with a value of 0x12345678, Pr **01.029** is a signed 16 bit parameter with a value of 0xABCD, and Pr **01.030** is a signed 16 bit parameter with a value of 0x0123.

Read	Start register address	Number of 16 bit registers	Response	Comments
Pr **01.028**	127	1	0x5678	Standard 16 bit access to a 32 bit register will return low 16 bit word of truncated data
Pr **01.028**	16511*	2	0x12345678	Full 32 bit access
Pr **01.028**	16511*	1	Exception 2	Number of words must be even for 32 bit access
Pr **01.029**	128	1	0xABCD	Standard 16 bit access to a 32 bit register will return low 16 bit word of data
Pr **01.029**	16512*	2	0xFFFFABCD	32 bit access to a 16 bit register will return 32 bit sign extended data
Pr **01.030**	16513*	2	0x00000123	32 bit access to a 16 bit register will return 32 bit sign extended data
Pr **01.028** to Pr **01.029**	127	2	0x5678, 0xABCD	Standard 16 bit access to a 32 bit register will return low 16 bit word of truncated data
Pr **01.028** to Pr **01.029**	16511*	4	0x12345678, 0xFFFFABCD	Full 32 bit access

* Bit14 is et to allow 32 bit access.

Writes when actual parameter type is different from selected

The slave will allow writing a 32 bit value to a 16 bit parameter as long as the 32 bit value is within the normal range of the 16 bit parameter.

The slave will allow a 16 bit write to a 32 bit parameter. The slave will sign extend the written value, therefore the effective range of this type of write will be -32768 to +32767.

Examples, if Pr **01.028** has a range of ±100000, and Pr **01.029** has a range of ±10000.

Write	Start register address	Number of 16 bit registers	Data	Comments
Pr **01.028**	127	1	0x1234	Standard 16 bit write to a 32bit register. Value written = 0x00001234
Pr **01.028**	127	1	0xABCD	Standard 16 bit write to a 32 bit register. Value written = 0xFFFFABCD
Pr **01.028**	16511	2	0x00001234	Value written = 0x00001234
Pr **01.029**	128	1	0x0123	Value written = 0x0123
Pr **01.029**	16512	2	0x00000123	Value written = 0x00000123

* Bit 14 is set to allow 32 bit access

7.8.8 - Exceptions

The slave will respond with an exception response if an error is detected in the master request. If a message is corrupted and the frame is not received or the CRC fails then the slave will not issue an exception. In this case the master device will time out. If a write multiple (FC16 or FC23) request exceeds the slave maximum buffer size then the slave will discard the message. No exception will be transmitted in this case and the master will time out.

Exception message format

The slave exception message has the following format.

Byte	Description
0	Slave source node address
1	Original function code with bit 7 set
2	Exception code
3	CRC LSB
4	CRC MSB

Exception codes

The following exception codes are supported.

Code	Description
1	Function code not supported
2	Register address out of range, or request to read too many registers

Parameter over range during block write FC16

The slave processes the write block in the order the data is received. If a write fails due to an out of range value then the write block is terminated. However, the slave does not raise an exception response, rather the error condition is signalled to the master by the number of successful writes field in the response. Parameter over range during block read/write FC23 There will be no indication that there has been a value out of range during a FC23 access.

7.8.9 - CRC

The CRC is a 16bit cyclic redundancy check using the standard CRC-16 polynomial x16 + x15 + x2 + 1. The 16 bit CRC is appended to the message and transmitted LSB first.
The CRC is calculated on ALL the bytes in the frame.

7.8.10 - Device compatibility parameters

All devices have the following compatibility parameters defined:

Parameter	Description
Device ID	Unique device identification code
Minimum slave response time	The minimum delay between the end of a message from the master and the time at which the master is ready to receive a response from the slave.
Maximum slave response time	When global addressing, the master must wait for this time before issuing a new message. In a network of devices, the slowest time must be used
Maximum baud rate	
32 bit float data type supported	If this data type is not supported then an over range error will be raised if this data type is used
Maximum buffer size	Determines the maximum block size.

7.8.11 - How to select a preset configuration with Modbus RTU

To activate a preset configuration, please proceed to the following settings:

- Write the required preset configuration to Pr **11.034**.
- Write 1001 to Pr **xx.000** (parameter 0 of any menu) to request a save.
- Write 100 to Pr **10.038** to request a reset that will perform the default settings.

8 - DIAGNOSTICS

When a LED side flange is fitted (ID-RUN-POT-LED-FLANGE, ID-POT-LED-FLANGE or ID-LED-FLANGE options) to the Commander ID300/302, the LEDs will give indications on the healthy of the Commander ID300/302, as explained in *section 3.5, page 12*. If the drive trips on a fault or is in alarm state, a keypad option or “Connect” software is needed to view which trip/alarm code it is.

When a keypad is connected to the Commander ID300/302, its display gives various information on trip, alarm and status indications.

Users must not attempt to repair a drive if it is faulty, nor carry out fault diagnosis other than through the use of the diagnostic features described in this chapter. If a drive or a motor is faulty, it must be returned to an authorized Leroy-Somer distributor for repair.

8.1 - LED indications

ADIO3 analog output is used to control the illumination of the 3 LED’s on flange option if fitted (Red, Green and Yellow LEDs). Pr **07.003** displays the level of the analog signal.

NOTE

By default, Yellow LED is not active. See Pr **07.019** if required. For more information about LED management, refer to *section 3.5, page 12*.

The table below indicates the ADIO3 output percentage for the defined LED states. This percentage is indicated in Pr **07.003**.

Red	Green	Yellow	Pr 07.003 (%)
			0
			14,30
			28,50
			43,20
			57,60
			70,90
			85,10
			100

8.2 - Trip indications on the keypad display

The output of the drive is disabled under any trip condition so that the drive stops controlling the motor. If the motor is running when the trip occurs it will coast to a stop.
During a trip condition, the upper row of the display indicates that a trip has occurred and the lower row of the keypad display will show the trip string. Some trips have a sub-trip number to provide additional information about the trip. If a trip has a sub-trip number, the sub-trip number is flashed alternately with the trip string unless there is space on the second row for both the trip string and the sub-trip number in which case both the trip string and sub-trip information is displayed separated by a decimal point.

Trips are listed alphabetically in *section 8.3, page 136* and based on the trip indication shown on the keypad display. The most recent trip can be read in Pr **10.020/00.056** providing a trip number. It must be noted that the hardware trips (HF01 to HF23) do not have trip numbers (except HF08, HF11, HF12 and HF18 which have sub-trip number/s).

The trip number must be checked in the trip table to identify the specific trip (see *section 8.4, page 153)*.

Example:
1. Trip code 2 is read from Pr **10.020/00.056** via serial communications.
2. Trip table shows Trip 2 is an Over Volts trip .

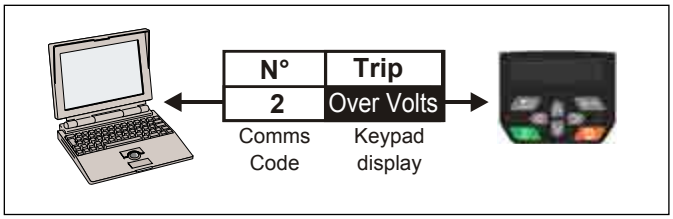

3. Look up Over Volts on *page 145*
4. Perform checks detailed under Diagnosis.

NOTE

The sub-trip number associated with the trips listed in Trip table is in the form xxyzz and used to identify the source of the trip.
The digits xx are 00 for a trip generated by the control system. If the trip is related to the power system then xx will have a value of 01, when displayed the leading zeros are suppressed.
For a control system trip (xx is zero), the y digit where relevant is defined for each trip. If not relevant, the y digit will have a value of zero.
The zz digits give the reason for the trip and are defined in each trip description.

8.3 - Trip descriptions

Trip	Diagnosis
An Input 1 Loss	**Analog input 1 current loss**
28	The 'An Input 1 Loss' trip indicates that a current loss was detected in current mode on Analog input 1 (Terminal 2). In 4-20 mA and 20-4 mA modes loss of input is detected if the current falls below 3 mA. **Recommended actions:** • Check control wiring is correct • Check control wiring is undamaged • Check the Analog Input 1 Mode (Pr **07.007**) • Current signal is present and greater than 3 mA
An Input 1 OI	**Analog input 1 over-current**
189	Current input on analog input 2 exceeds 24 mA. **Recommended actions:** Check control wiring is correct. Check control wiring is undamaged. Check Analog Input 1 Mode Pr **07.007**
An Input 2 Loss	**Analog input 2 current loss**
29	The 'An Input 2 Loss' trip indicates that a current loss was detected in current mode on Analog input 2 (Terminal 4). In 4-20 mA and 20-4 mA modes loss of input is detected if the current falls below 3 mA. **Recommend actions:** • Check control wiring is correct • Check control wiring is undamaged • Check the Analog Input 2 Mode (Pr **07.011**) • Current signal is present and greater than 3 mA
An Input 2 OI	**Analog input 2 over-current**
190	Current input on analog input 2 exceeds 24 mA.
An Input 3 Loss	**Analog input 3 current loss**
39	The 'An Input 3 Loss' trip indicates that a current loss was detected in current mode on Analog input 3 (Terminal 5). In 4-20 mA and 20-4 mA modes loss of input is detected if the current falls below 3 mA. **Recommended actions:** • Check control wiring is correct • Check control wiring is undamaged • Check the Analog Input 3 Mode (Pr **07.015**) • Current signal is present and greater than 3 mA
An Input 3 OI	**Analog input 3 over-current**
191	Current input on analog input 3 exceeds 24mA
Autotune 1	**Required speed could not be reached**
11	The drive has tripped during an autotune. The cause of the trip can be identified from the sub-trip number. **Sub-trip** / **Reason** 2 / The motor did not reach the required speed during rotating autotune. **Recommended actions:** • Ensure the motor is free to turn i.e. mechanical brake is released
Autotune 3	**Measured inertia has exceeded the parameter range (RFC-A mode only, available soon)**
13	The drive has tripped during a rotating autotune or mechanical load measurement. The cause of the trip can be identified from the associated sub-trip number. **Sub-trip** / **Reason** 1 / Measured inertia has exceeded the parameter range during a mechanical load measurement 3 / The mechanical load test has been unabled to identify the motor inertia **Recommended actions:** • Check motor cable wiring is correct

Trip	Diagnosis
Autotune Stopped	**Autotune test stopped before completion**
18	The drive was prevented from completing an autotune, because either the drive enable or the drive run were removed. **Recommended actions:** • Check the drive enable signal (Terminal 8 on Commander ID300 and terminals 31 & 34 on Commander ID302) was active during the autotune. • Check the run command was active in Digital input 3 or 4 state (Pr **08.003** or Pr **08.004**) during the autotune.
Brake R Too Hot	**Braking resistor over temperature**
19	The 'Brake R Too Hot' trip indicates that braking resistor overload has timed out. The value in Braking Resistor Thermal Accumulator (Pr **10.039**) is calculated using Braking Resistor Rated Power (Pr **10.030**), Braking Resistor Thermal Time Constant (Pr **10.031**) and Braking Resistor Resistance (Pr **10.061**). The 'Brake R too Hot' trip is initiated when the Braking Resistor Thermal Accumulator (Pr **10.039**) reaches 100 %. **Recommended actions:** • Ensure the values entered in Pr **10.030**, Pr **10.031** and Pr **10.061** are correct. • Check resistor value and power rating • If an external thermal protection device is being used and the braking resistor software overload protection is not required, set Pr **10.030**, Pr **10.031** or Pr **10.061** to 0 to disable the trip.
Control Word	**Trip initiated from the Control Word (Pr 06.042)**
35	The 'Control Word' trip is initiated by setting bit 12 on the control word in Pr **06.042** when the control word is enabled (Pr **06.043** = 1). **Recommended actions:** • Check the value of Pr **06.042**. • Disable the control word in Control Word Enable (Pr **06.043**) Bit 12 of the control word set to a one causes the drive to trip on Control Word. When the control word is enabled, the trip can only be cleared by setting bit 12 to zero.
Data Changing	**Drive parameters are being changed**
97	A user action or a file system write is active that is changing the drive parameters and the drive has been commanded to enable, i.e. Drive Active (Pr **10.002**) = 1. The user actions that change drive parameters are loading defaults or changing drive mode. The file system actions that will cause this trip to be initiated if the drive is enabled during the transfer are writing a parameter or macro file to the drive, or transferring a user program to the drive. It should be noted that none of these actions can be started if the drive is active, and so the trip only occurs if the action is started and then the drive is enabled. **Recommended actions:** • Ensure the drive is not enabled when one of the following is being carried out: - Loading defaults - Transferring user program - Changing drive mode
Derivative ID	**Derivative file error**
246	Derivative file error with sub-trips:

Sub-trip	Reason	Comments
1	The derivative file is missing or is invalid	Occurs when the drive powers-up. Load valid derivative file matching the control board hardware.
2	The derivative file does not match the control board hardware	Occurs when the drive powers-up. Load valid derivative file matching the control board hardware.
3	The derivative file has been changed for a file with a different derivative number.	Occurs when the drive powers-up or the file is programmed. The file tasks will not run.

Recommended actions:
• Contact the supplier of the drive

Trip	Diagnosis
Derivative Image	**Derivative product image error**
248	The Derivative Image trip indicates that an error has been detected in the derivative product image. The reason for the trip can be identified by the sub-trip number.

Sub-trip	Reason	Comments
1	Divide by zero	
2	Undefined trip	
3	Attempted fast parameter access set-up with non-existent parameter	
4	Attempted access to non-existent parameter	
5	Attempted write to read-only parameter	
6	Attempted an over-range write	
7	Attempted read from write-only parameter	
30	The image has failed because either its CRC is incorrect, or there are less than 6 bytes in the image or the image header version is less than 5	Occurs when the drive powers-up or the image is programmed. The image tasks will not run
31	The image requires more RAM for heap and stack than can be provided by the drive.	As 30
32	The image requires an OS function call that is higher than the maximum allowed.	As 30
33	The ID code within the image is not valid.	As 30
34	The derivative image has been changed for an image with a different derivative number.	As 30
40	The timed task has not completed in time and has been suspended.	Reduce code in timed task or power down repeat rate
41	Undefined function called, i.e. a function in the host system vector table that has not been assigned.	As 40
51	Core menu customization table CRC check failed	As 30
52	Customizable menu table CRC check failed	As 30
53	Customizable menu table changed	Occurs when the drive powers-up or the image is programmed and the table has changed. Defaults are loaded for the derivative menu and the trip will keep occurring until drive parameters are saved.
61	The option module installed in slot 1 is not allowed with the derivative image.	As 30
80	Image is not compatible with the control board.	Initiated from within the image code
81	Image is not compatible with the control board serial number.	As 80

Recommended actions:
• Contact the supplier of the drive

Destination	**Two or more parameters are writing to the same destination parameter**
199	The 'Destination' trip indicates that destination parameters of two or more functions (Menus 7, 8, 9, 12 or 14) within the drive are writing to the same parameter. **Recommended actions:** • Set Pr **mm.000** to 'Destinations' or 12001 and check all visible parameters in all menus for parameter write conflicts

<table>
<tr><th>Trip</th><th>Diagnosis</th></tr>
<tr><td>Drive config</td><td>Drive configuration</td></tr>
<tr><td>232</td><td>The hardware ID does not match the user software ID.
<table>
<tr><th>Sub-trip</th><th>Reason</th></tr>
<tr><td>2</td><td>The power stage hardware detected is invalid.</td></tr>
<tr><td>3</td><td>The power stage hardware does not match the drive configuration data.</td></tr>
</table>
Recommended actions:
• Return the drive to the supplier</td></tr>
<tr><td>EEPROM Fail</td><td>Default parameters have been loaded</td></tr>
<tr><td>31</td><td>The 'EEPROM Fail' trip indicates that default parameters have been loaded. The exact cause/reason of the trip can be identified from the sub-trip number.
<table>
<tr><th>Sub-trip</th><th>Reason</th></tr>
<tr><td>1</td><td>The most significant digit of the internal parameter database version number has changed</td></tr>
<tr><td>2</td><td>The CRC's applied to the parameter data stored in internal non-volatile memory indicate that a valid set of parameters cannot be loaded</td></tr>
<tr><td>3</td><td>The drive mode restored from internal non-volatile memory is outside the allowed range for the product or the derivative image does not allow the previous drive mode</td></tr>
<tr><td>4</td><td>The drive derivative image has changed</td></tr>
<tr><td>5</td><td>The power stage hardware has changed</td></tr>
<tr><td>6</td><td>Reserved</td></tr>
<tr><td>7</td><td>Reserved</td></tr>
<tr><td>8</td><td>The control board hardware has changed</td></tr>
<tr><td>9</td><td>The checksum on the non-parameter area of the EEPROM has failed</td></tr>
</table>
The drive holds two banks of user save parameters and two banks of power down save parameters in non-volatile memory.
If the last bank of either set of parameters that was saved is corrupted a 'User Save' or 'Power Down Save 'trip is produced. If one of these trips occurs, the parameters values that were last saved successfully are used. It can take some time to save parameters when requested by the user and if the power is removed from the drive during this process, it is possible to corrupt the data in the non-volatile memory.
If both banks of user save parameters or both banks of power down save parameters are corrupted or one of the other conditions given in the table above occurs 'EEPROM Fail.xxx' trip is produced. If this trip occurs it is not possible to use the data that has been saved previously, and so the drive will be loaded with default parameters. The trip can only be reset if Pr mm.000 is set to 10, 11, 1233 or 1244 or if Load Defaults (Pr 11.043) is set to a non-zero value.
Recommended actions:
• Default the drive and perform a reset
• Allow sufficient time to perform a save before the supply to the drive is removed
• If the trip persists - return drive to supplier</td></tr>
<tr><td>External Trip</td><td>An External trip is initiated</td></tr>
<tr><td>6</td><td>An 'External Trip' trip has occurred. The cause of the trip can be identified from the sub trip number displayed after the trip string. See table below.
<table>
<tr><th>Sub-trip</th><th>Reason</th></tr>
<tr><td>3</td><td>External Trip (Pr 10.032) = 1</td></tr>
</table>
In the case of the Pump preset configuration has been enabled (Pr 00.005/11.034 = Pump (22)), this trip indicates the pump is in pump-off condition. For more details about pump configuration, refer to section 5.6.12, page 82
Recommended actions:
• Check the value of Pr 10.032.
• Select ‘Destinations’ (or enter 12001) in Pr mm.000 and check for a parameter controlling Pr 10.032.
• Ensure Pr 10.032 is not being controlled by serial comms</td></tr>
</table>

Trip	Diagnosis
File changed	**File changed**
247	Drive configuration file has changed in the power stage processor and so a power cycle is required. **Recommended action:** • Power cycle the drive.
FW incompatible	**Firmware incompatibility**
237	The 'FW incompatible' trip indicates that the user firmware (Pr **11.029**) is incompatible with the power firmware (Pr **11.035**). **Recommended actions:** • Contact the supplier of the drive
HF01	**Data processing error: CPU hardware fault**
	The 'HF01' trip indicates that a CPU address error has occurred. This trip indicates that the control PCB on the drive has failed. **Recommended actions:** • Hardware fault – Contact the supplier of the drive
HF02	**Data processing error: CPU memory management fault**
	The 'HF02' trip indicates that a DMAC address error has occurred. This trip indicates that the control PCB on the drive has failed. **Recommended actions:** • Hardware fault – Contact the supplier of the drive
HF03	**Data processing error: CPU has detected a bus fault**
	The 'HF03' trip indicates that a bus fault has occurred. This trip indicates that the control PCB on the drive has failed. **Recommended actions:** • Hardware fault – Contact the supplier of the drive
HF04	**Data processing error: CPU has detected a usage fault**
	The 'HF04' trip indicates that a usage fault has occurred. This trip indicates that the control PCB on the drive has failed. **Recommended actions:** • Hardware fault – Contact the supplier of the drive
HF05	**Reserved**
HF06	**Reserved**
HF07	**Data processing error: Watchdog failure**
	The 'HF07' trip indicates that a watchdog failure has occurred. This trip indicates that the control PCB on the drive has failed. **Recommended actions:** • Hardware fault – Contact the supplier of the drive
HF08	**Data processing error: CPU Interrupt crash**
	The 'HF08' trip indicates that a CPU interrupt crash has occurred. This trip indicates that the control PCB on the drive has failed. **Recommended actions:** • Hardware fault – Contact the supplier of the drive
HF09	**Data processing error: Free store overflow**
	The 'HF09' trip indicates that a free store overflow has occurred. This trip indicates that the control PCB on the drive has failed. **Recommended actions:** • Hardware fault – Contact the supplier of the drive
HF10	**Reserved**

Trip	Diagnosis
HF11	**Data processing error: Non-volatile memory comms error**
	The 'HF11' trip indicates that a non-volatile memory comms error has occurred. The crash level is indicated by the sub-trip number. This trip indicates that the control PCB on the drive has failed.

Sub-trip	Reason	Recommended action
1	Non-volatile memory comms error.	Contact the supplier of the drive.
2	EEPROM size is incompatible with the user firmware.	Contact the supplier of the drive

HF12	**Data processing error: Main program stack overflow**
	The 'HF12' trip indicates that the main program stack over flow has occurred. The stack can be identified by the sub-trip number. This trip indicates that the control PCB on the drive has failed.

Sub-trip	Stack
1	User program or derivative background stack overflow
2	User program or derivative timed stack overflow
3	Main system interrupt stack overflow
4	Main system background stack overflow

Recommended actions:
• Hardware fault - Contact the supplier of the drive

HF13	Reserved
HF14	
HF15	
HF16	**Data processing error: RTOS error**
	The 'HF16' trip indicates that a RTOS error has occurred. This trip indicates that the control PCB on the drive has failed.

Recommended actions:
• Hardware fault – Contact the supplier of the drive

HF17	**Reserved**
HF18	**Data processing error: Internal flash memory has failed**
	The 'HF18' trip indicates that the internal flash memory has failed when writing option module parameter data. The reason for the trip can be identified by the sub-trip number.

Sub-trip	Reason
1	Programming error while writing menu in flash
2	Erase flash block containing setup menus failed
3	Erase flash block containing application menus failed

HF19	**Data processing error: CRC check on the firmware has failed**
	'HF19' trip indicates that the CRC check on the drive firmware has failed. The drive is now in its Bootloader and is waiting for a new image to be downloaded using Connect software. Once a new image is downloaded, the drive can run normally.

Recommended actions:
• Contact the supplier of the drive

HF23	**Hardware fault**

Recommended actions:
• If this trip occurs, contact the supplier of the drive

I cal. range	**Current calibration range**
231	Current calibration range error.

Recommended actions:
• Hardware fault - Contact the supplier of the drive

<table>
<tr><th>Trip</th><th>Diagnosis</th></tr>
<tr><td>I/O Overload</td><td>Digital output overload</td></tr>
<tr><td>26</td><td>This trip indicates that the total current drawn from the digital output has exceeded the limit.
<table>
<tr><th>Sub-trip</th><th>Reason</th></tr>
<tr><td>1</td><td>Digital output or 24 V supply load on control terminal is too high.</td></tr>
</table>
Recommended actions:
• Check total loads on digital outputs and 24 V
• Check control wiring is correct
• Check output wiring is undamaged</td></tr>
<tr><td>Keypad Mode</td><td>Keypad has been removed when the drive is receiving the reference from the keypad</td></tr>
<tr><td>34</td><td>The 'Keypad Mode' trip indicates that the drive is in keypad mode [Reference Selector (Pr 01.014) = 4 or 6] and the keypad has been removed or disconnected from the drive.
Recommended actions:
• Re-install keypad and reset
• Change Reference Selector (Pr 01.014) to select the reference from another source</td></tr>
<tr><td>Motor Too Hot</td><td>Output current overload timed out (I^2t)</td></tr>
<tr><td>20</td><td>The 'Motor Too Hot' trip indicates a motor thermal overload based on the Motor Rated Current (Pr 05.007) and Motor Thermal Time Constant (Pr 04.015). Pr 04.019 displays the motor temperature as a percentage of the maximum value. The drive will trip on 'Motor Too Hot' when Pr 04.019 gets to 100 %.
Recommended actions:
• Ensure the load is not jammed / sticking
• Check the load on the motor has not changed
• Tune the motor rated speed parameter (Pr 05.008) (RFC-A mode only, available soon)
• Ensure the motor rated current is not zero</td></tr>
<tr><td>No power board</td><td>No power board</td></tr>
<tr><td>236</td><td>This trip is generated if the control board cannot establish a communication link with the power stage within 5 seconds of powering up.
Recommended actions:
• Hardware fault - contact the supplier of the drive.</td></tr>
<tr><td>OHt Control</td><td>Control stage over temperature</td></tr>
<tr><td>219</td><td>This trip indicates that a control stage over-temperature has been detected if Cooling Fan Control (Pr 06.045) = 0. This trip causes the option module to go to standby and Potential Drive Damage Conditions (Pr 10.106) Bit 1 to be set.
Recommended actions:
• Increase ventilation by setting Cooling Fan Control (Pr 06.045) > 0</td></tr>
</table>

<table>
<tr><th>Trip</th><th>Diagnosis</th></tr>
<tr><td>OHt dc bus</td><td>DC bus over temperature</td></tr>
<tr><td>27</td><td>The 'OHt dc bus' trip indicates a DC bus component over temperature based on a software thermal model. The drive includes a thermal protection system to protect the DC bus components within the drive. This includes the effects of the output current and DC bus ripple. The estimated temperature is displayed as a percentage of the trip level in Pr 07.035. If this parameter reaches 100 % then an 'OHt dc bus' trip is initiated. The drive will attempt to stop the motor before tripping. If the motor does not stop in 10 seconds, the drive trips immediately.
<table>
<tr><th>Source</th><th>xx</th><th>y</th><th>zz</th></tr>
<tr><td>Control system</td><td>00</td><td>2</td><td>00: DC link thermal model gives OHt dc bus with sub-trip 0.</td></tr>
</table>
Recommended actions:
• Check the AC supply voltage balance and levels
• Check DC bus ripple level
• Reduce duty cycle
• Reduce motor load
• Check the output current stability. If unstable;
Check the motor map settings with motor nameplate (Pr 05.006, Pr 05.007, Pr 05.008, Pr 05.009, Pr 05.010, Pr 05.011)
Disable slip compensation (Pr 05.027 = 0) – (Open loop), Disable dynamic V to F operation (Pr 05.013 = 0) - (Open loop), Select fixed boost (Pr 05.014 = Fixed) – (Open loop)
Select high stability space vector modulation (Pr 05.019 = On) – (Open loop), Disconnect the load and complete a rotating auto-tune (Pr 05.012)
Reduce frequency loop gains (Pr 03.010, Pr 03.011, Pr 03.012) – (RFC-A only, available soon)</td></tr>
<tr><td>OHt Inverter</td><td>Inverter over temperature based on thermal model</td></tr>
<tr><td>21</td><td>This trip indicates that an IGBT junction over-temperature has been detected based on a firmware thermal model.
Recommended actions:
• Check drive fan is still functioning correctly.
• Force the fan to run at maximum speed.
• Reduce the selected drive switching frequency.
• Ensure Auto-switching Frequency Change Disable Pr 05.035 is set to 0.
• Reduce duty cycle.
• Increase acceleration / deceleration rate parameter values.
• Reduce motor load.
• Check DC bus ripple.
• Ensure input phases are present and balanced.
• Check the drive is correctly sized for the application.</td></tr>
<tr><td>OHt Power</td><td>Power stage over temperature</td></tr>
<tr><td>22</td><td>This trip indicates that a power stage over-temperature has been detected. From the sub-trip ‘xxyzz’, the Thermistor location is identified by ‘zz’.
<table>
<tr><th>Source</th><th>xx</th><th>y</th><th>zz</th></tr>
<tr><td>Power system</td><td>01</td><td>0</td><td>zz: Thermistor location defined by zz in the power system gives OHt Power trip with sub-trip xx0zz.</td></tr>
</table>
Recommended actions:
• Check drive fan is still functioning correctly.
• Force the fan to run at maximum speed.
• Reduce the selected drive switching frequency.
• Ensure Auto-switching Frequency Change Disable Pr 05.035 is set to 0.
• Reduce duty cycle.
• Increase acceleration / deceleration rate parameter values.
• Reduce motor load.
• Check DC bus ripple.
• Ensure input phases are present and balanced.
• Check the drive is correctly sized for the application.</td></tr>
</table>

Trip	Diagnosis
OI ac	**Instantaneous output over current detected**
3	The instantaneous drive output current has exceeded Pr **11.061**. This trip cannot be reset until 10 s after the trip was initiated. **Recommended actions/checks:** • Increase acceleration/deceleration rate • If seen during auto-tune reduce the voltage boost • Check for short circuit on the output cabling • Check integrity of the motor insulation using an insulation tester • Reduce the values in the current loop gain parameters - (Pr **04.013**, Pr **04.014**)
OI Brake	**Braking IGBT over current detected: short circuit protection for the braking IGBT activated**
4	The 'OI Brake' trip indicates that over current has been detected in braking IGBT or braking IGBT protection has been activated. This trip cannot be reset until 10 s after the trip was initiated. **Recommended actions:** • Check brake resistor wiring • Check braking resistor value is greater than or equal to the minimum resistance value • Check braking resistor insulation
Out Phase Loss	**Output phase loss detected**
98	The 'Out Phase Loss' trip indicates that phase loss has been detected at the drive output. A test can be made for output phase loss when the drive is enabled or the output phase loss condition can be detected while the drive is running as defined by Output Phase Loss Detection Enable (Pr **06.059**). **Sub-trip** / **Reason**: 1 – U phase is not connected when drive is enabled 2 – V phase is not connected when drive is enabled 3 – W phase is not connected when drive is enabled 4 – The drive output frequency is above 4 kHz and a phase is disconnected for the time specified by Output Phase Loss Detection Time (Pr **06.058**) NOTE If Pr **05.042** = On(1), the physical output phases are reversed, and so sub-trip 3 refers to physical output phase V and sub-trip 2 refers to physical output phase W. **Recommended actions:** • Check motor and drive connections • To disable the trip set Output Phase Loss Detection Enable (Pr **06.059**) = 0
Output Phase U	**Over current on U phase**
228	On enabling of the drive it switches the negative DC bus to each motor terminal in turn to detect an earth fault. If current is detected in any of the motor windings the drive will trip OI.E1, OI.E2 or OI.E3 depending on which terminal the fault is detected (U, V, or W respectively). **Recommended actions:** Check motor and connection to motor
Output Phase V	**Over current on V phase**
229	See 'Output Phase U' for explanation. **Recommended actions:** Check motor and connection to motor
Output Phase W	**Over current on V phase**
230	See 'Output Phase U' for explanation. **Recommended actions:** Check motor and connection to motor

<table>
<tr><th>Trip</th><th>Diagnosis</th></tr>
<tr><td>Over Speed</td><td>Motor frequency has exceeded the over frequency threshold</td></tr>
<tr><td>7</td><td>In open loop mode, if the Post-ramp Reference (Pr 02.001) exceeds the threshold set in the Over Frequency Threshold (Pr 03.008) in either direction an 'Over Speed' trip is produced. In RFC-A mode (available soon), if the Estimated Frequency (Pr 03.002) exceeds the Over Frequency Threshold in Pr 03.008 in either direction, an 'Over Speed' trip is produced. If Pr 03.008 is set to 0.00, the threshold is then equal to 1.2 x the value set in Pr 01.006.
Recommended actions:
• Check that the motor is not being driven by another part of the system.
• Reduce the Frequency Controller Proportional Gain (Pr 03.010) to reduce the frequency overshoot (RFC-A mode only, available soon).
• Reduce Current Controller Ki Gain (Pr 04.014).</td></tr>
<tr><td>Over Volts</td><td>DC bus voltage has exceeded the peak level or maximum continuous level for 15 seconds</td></tr>
<tr><td>2</td><td>The 'Over Volts' trip indicates that the DC bus voltage has exceeded the VM_DC_VOLTAGE[MAX] or VM_DC_VOLTAGE_SET[MAX] for 15 s. The trip threshold varies depending on voltage rating of the drive as shown below.
<table>
<tr><th>Voltage rating</th><th>Threshold</th></tr>
<tr><td>200</td><td>415</td></tr>
<tr><td>400</td><td>900</td></tr>
</table>
Sub-trip Identification
<table>
<tr><th>Sub-trip</th><th>Reason</th></tr>
<tr><td>0</td><td>Instantaneous trip when the d.c. link voltage exceeds the theshold in the table above</td></tr>
<tr><td>1</td><td>Reserved</td></tr>
<tr><td>2</td><td>Time delayed trip indicating that the d.c. link voltage is above VM_DC_VOLTAGE_SET[MAX].</td></tr>
</table>
Recommended actions:
• Increase deceleration ramp (Pr 02.021)
• Decrease the braking resistor value (staying above the minimum value)
• Check nominal AC supply level
• Check for supply disturbances which could cause the DC bus to rise
• Check motor insulation using an insulation tester</td></tr>
<tr><td>Phase Loss</td><td>Supply phase loss</td></tr>
<tr><td>32</td><td>The 'Phase Loss' trip indicates that the drive has detected an input phase loss or large supply imbalance. The drive will attempt to stop the motor before this trip is initiated. If the motor cannot be stopped in 10 seconds the trip occurs immediately. The 'Phase Loss' trip works by monitoring the ripple voltage on the DC bus of the drive, if the DC bus ripple exceeds the threshold, the drive will trip on 'Phase Loss'. Potential causes of the DC bus ripple are input phase loss, large supply impedance and severe output current instability.
<table>
<tr><th>Source</th><th>xx</th><th>y</th><th>zz</th></tr>
<tr><td>Control system</td><td>00</td><td>0</td><td>00: Phase loss detected based on control system feedback. The drive attempts to stop the motor before tripping unless bit 2 of Action On Trip Detection (Pr 10.037) is set to one.</td></tr>
<tr><td>Power system</td><td>01</td><td>0</td><td>10: Phase loss has been detected by the rectifier module.</td></tr>
</table>
Input phase loss detection can be disabled when the drive is required to operate from the DC supply or from a single phase supply in Input Phase Loss Detection Mode (Pr 06.047).
Recommended actions:
• Check the AC supply voltage balance and level at full load
• Check the DC bus ripple level with an isolated oscilloscope
• Check the output current stability
• Check for mechanical resonance with the load
• Reduce the duty cycle
• Reduce the motor load
• Disable the phase loss detection, set Pr 06.047 to 2.</td></tr>
</table>

Trip	Diagnosis
Power Board HF	**Power board HF**
235	Power processor hardware fault. The sub-trip number is the HF code. **Recommended action:** • Hardware fault - Contact the supplier of the drive
Power Boot Mode	**Power board is in bootloader mode**
245	Power board is in bootloader mode. **Recommended actions:** • Contact the supplier of the drive
Power Comms	**Communication has been lost / errors detected between control and power board**
93	The 'Power Comms' trip is initiated if there is no communications between the control board processor and the power board processor. The reason for the trip can be identified by the sub-trip number. **Recommended actions:** • Hardware fault – Contact the supplier of the drive

Sub-trip	Reason
1	PLL operating range out of lock
2	Power board lost communications with user board
3	User board lost communication with power board
4	Communication CRC error

Power Data	**Power system configuration data error**
220	Data relevant to the rating of the drive is stored in the power stage processor flash memory. A copy of this data is also stored in the control board processor and this is transferred across at power up if the data in the control board and power stage does not match. There are a few sub-trips associated with power data transfer: **Recommended actions:** • Hardware fault – Contact the supplier of the drive

Sub-trip	Reason
0	An error occured when writing to the data in the Power stage Flash (during factory upload of data)
1	A file error has been detected in the Power stage when data is being written to it (in the factory),or being uploaded from it by the control board processor.
2	There is no table present in the power stage, or there is an error in the data table, or the control board is being powered from the 24V backup supply and it does not have a valid table present (during 24V backup operation the control card cannot communicate with the power stage to update the data table).
3	The power system data table is bigger than the space available in the control pod to store it.
4	Reserved
5	Table CRC error.
6	The version number of the generator software that produced the table is too low, i.e. a table from a newer generator is required that includes features that have been added to the table that may not be present.
7	The power data table used internally by the power module has an error.
8	The control board failed to upload the data from the power stage or write it to it's flash memory.

Power Down Save	**Power down save error**
37	The 'Power Down Save' trip indicates that an error has been detected in the power down save parameters saved in non-volatile memory. **Recommended actions:** • Perform a 1001 save in Pr **mm.000** to ensure that the trip doesn't occur the next time the drive is powered up.

Trip	Diagnosis
PSU	**Internal power supply fault**
5	The 'PSU' trip indicates that one or more internal power supply rails are outside limits or overloaded. **Recommended actions:** • Remove the option module and perform a reset • There is a hardware fault within the drive – return the drive to the supplier
Reserved	**Reserved trips**
01, 09, 12, 14-17, 23, 38, 39, 91, 94 - 95, 99, 101 - 109, 111, 168 - 172, 176, 191 - 198, 205 - 217, 222 - 224, 229 - 230, 233, 238 - 244, 251 - 254	These trip numbers are reserved for future use. These trips should not be used by the user application programs.
Resistance	**Measured resistance has exceeded the parameter range**
33	During auto-tune an attempt is made to measure the resistance of the motor connected to the drive. The drive will trip with one of the following sub-trip codes if a problem is encountered during the measurement. The reason for the trip can be identified by the sub-trip number. **Sub-trip** / **Reason** 1 – Stator resistance (Pr **05.017**/**21.012**) is greater than (V_{FS} / √2) / Full Scale Current Kc (Pr **11.061**), where V_{FS} is the full scale d.c. bus voltage; or the result is = 100 ohms. 2 – The measured Transient Inductance (Pr **05.024**/**21.014**) is greater than 500 mH or the measured Stator Inductance (Pr **05.025**/**21.024**) is greater than 5000 mH. 3 – A resistance value entered by the user is greater than (V_{FS} / √2) / Full Scale Current Kc (Pr **11.061**), where V_{FS} is the full scale d.c. bus voltage. Clear this trip by setting Stator Resistance (Pr **05.017**) to a value that is in range and resetting the drive. 4 – The measured stator resistance is not greater than the sub-trip 0 check but is outside the firmware usable range for this drive size. **Recommended actions:** • Ensure the stator resistance of the motor falls within the range of the drive model. The most likely cause of this trip is trying to measure a motor much smaller than the drive rating. Ratio's of drive size to motor size of greater than 15:1 are likely to lead to a problem. • Check that a value has not been entered in the Stator Resistance for the presently selected motor map that exceeds the allowed range. • Check the motor cable / connections • Check the integrity of the motor stator winding using an insulation tester • Check the motor phase to phase resistance at the drive terminals • Check the motor phase to phase resistance at the motor terminals • Ensure the stator resistance of the motor falls within the range of the drive model • Select fixed boost mode (Pr **05.014** = Fd) and verify the output current waveforms with an oscilloscope • Replace the motor

Trip	Diagnosis
Slot 1 Different	**Option module in option slot 1 has changed**
204	The 'Slot 1 Different' trip indicates that the option module in option slot 1 on the drive is a different type to that installed when parameters were last saved on the drive. The reason for the trip can be identified by the sub-trip number.

Sub-trip	Reason
1	No module was installed previously
2	A module with the same identifier is installed, but the set-up menu for this option slot has been changed, and so default parameters have been loaded for this menu.
3	A module with the same identifier is installed, but the applications menu for this option slot has been changed, and so default parameters have been loaded for this menu.
4	A module with the same identifier is installed, but the set-up and applications menu for this option slot have been changed, and so default parameters have been loaded for these menus.
> 99	Shows the identifier of the module previously installed.

Recommended actions:
• Turn off the power, ensure the correct option module is installed in the option slot and re-apply the power.
• Confirm that the currently installed option module is correct, ensure option module parameters are set correctly and perform a user save in Pr **mm.000**.

Slot 1 Error	**Option module in option slot 1 has detected a fault**
202	The 'Slot 1 Error' trip indicates that the option module in option slot 1 on the drive has detected an error. The reason for the error can be identified by the sub-trip number. As default the sub-trip number is shown as a number on the display. However, it is possible for the option module to supply sub-trip number strings which will be displayed instead of the number if available. **Recommended actions:** • See relevant option module User Guide for details of the trip
Slot 1 HF	**Option module 1 hardware fault**
200	The 'Slot 1 HF' trip is generated by the drive. The possible causes of the trip can be identified by the sub-trip number.

Sub-trip	Reason
1	The module category cannot be identified
2	All the required customized menu table information has not been supplied or the tables supplied are
3	There is insufficient memory available to allocate the comms buffers for this module
4	The module has not indicated that it is running correctly during drive power-up
5	Module has been removed after power-up or it has stopped working
6	The module has not indicated that it has stopped accessing drive parameters during a drive mode change
7	The module has failed to acknowledge that a request has been made to reset the drive processor
8	The drive failed to read correctly the menu table from the module during drive power-up
9	The drive failed to upload menu tables from the module and timed-out (5 s)
10	Menu table CRC invalid

Recommended actions:
• Ensure the option module is installed correctly
• Replace the option module
• Replace the drive

<table>
<tr><th>Trip</th><th>Diagnosis</th></tr>
<tr><td>Slot 1 Not Fitted</td><td>Option module in option slot 1 has been removed</td></tr>
<tr><td>203</td><td>The 'Slot 1 Not Fitted' trip indicates that the option module in option slot 1 on the drive has been removed since the last power up. The sub-trip number gives the ID code of the option module that has been removed.
Recommended actions:
• Ensure the option module is installed correctly.
• Re-install the option module.
• To confirm that the removed option module is no longer required perform a save function in Pr mm.000.</td></tr>
<tr><td>Slot 1 Watchdog</td><td>Option module watchdog function service error</td></tr>
<tr><td>201</td><td>The 'Slot 1 Watchdog' trip indicates that the option module installed in Slot 1 has started the option watchdog function and then failed to service the watchdog correctly.
Recommended actions:
• Replace the option module</td></tr>
<tr><td>Soft Start</td><td>Soft start relay failed to close, soft start monitor failed</td></tr>
<tr><td>226</td><td>The 'Soft Start' trip indicates that the soft start relay in the drive failed to close or the soft start monitoring circuit has failed. The cause of the trip can be identified by the sub-trip number.
<table>
<tr><th>Sub-trip</th><th>Reason</th></tr>
<tr><td>1</td><td>Soft-start failure</td></tr>
</table>
Recommended actions:
• Hardware fault – Contact the supplier of the drive</td></tr>
<tr><td>STO Error</td><td>No Safe Torque Off board fitted</td></tr>
<tr><td>234</td><td>STO board not fitted.
Recommended actions:
Hardware fault – Contact the supplier of the drive</td></tr>
<tr><td>Stored HF</td><td>Hardware trip has occurred during last power down</td></tr>
<tr><td>221</td><td>The 'Stored HF' trip indicates that a hardware trip (HF01 –HF18) has occurred and the drive has been power cycled. The sub-trip number identifies the HF trip.
Recommended actions:
• Enter 1299 in Pr mm.000 and press reset to clear the trip</td></tr>
<tr><td>Sub-array RAM</td><td>RAM allocation error</td></tr>
<tr><td>227</td><td>The 'Sub-array RAM' trip indicates that an option module derivative or user program image has requested more parameter RAM than is allowed. The RAM allocation is checked in order of resulting sub-trip numbers, and so the failure with the highest sub-trip number is given. The sub-trip is calculated as (parameter size) + (parameter type) + sub-array number.
<table>
<tr><th>Parameter size</th><th>Value</th></tr>
<tr><td>1 bit</td><td>1</td></tr>
<tr><td>8 bit</td><td>2</td></tr>
<tr><td>16 bit</td><td>3</td></tr>
<tr><td>32 bit</td><td>4</td></tr>
<tr><td>64 bit</td><td>5</td></tr>
</table>
<table>
<tr><th>Parameter type</th><th>Value</th></tr>
<tr><td>Volatile</td><td>0</td></tr>
<tr><td>User save</td><td>1</td></tr>
<tr><td>Power-down save</td><td>2</td></tr>
</table>
Derivatives can customize menus 18 and 20.
<table>
<tr><th>Sub-array</th><th>Menus</th><th>Value</th></tr>
<tr><td>Applications menus</td><td>18-20</td><td>1</td></tr>
<tr><td>Derivative image</td><td>29</td><td>2</td></tr>
<tr><td>User program image</td><td>30</td><td>3</td></tr>
<tr><td>Option slot 1 set-up</td><td>15</td><td>4</td></tr>
<tr><td>Option slot 1 applications</td><td>25</td><td>5</td></tr>
</table></td></tr>
</table>

<table>
<tr><th>Trip</th><th>Diagnosis</th></tr>
<tr><td>Temp Feedback</td><td>Internal thermistor has failed</td></tr>
<tr><td>218</td><td>This trip indicates a fault with a thermistor in the Power stage (i.e. open circuit or short circuit).
<table>
<tr><th>Sub- trip</th><th>Reason</th></tr>
<tr><td>0</td><td>Thermistor failure in the main power stage</td></tr>
<tr><td>1010</td><td>Thermistor failure in the rectifier module</td></tr>
</table>
Recommended actions:
• Hardware fault – Contact the supplier of the drive</td></tr>
<tr><td>Th Short Circuit</td><td>Motor thermistor short circuit</td></tr>
<tr><td>25</td><td>The 'Th Short Circuit' trip indicates that the motor thermistor connected to terminal 4 (Analog/digital input 2) on the control connections, is short circuit or low impedance (<50 Ω).
Recommended actions:
• Check thermistor continuity
• Replace motor / motor thermistor</td></tr>
<tr><td>Thermistor</td><td>Motor thermistor over-temperature</td></tr>
<tr><td>24</td><td>The 'Thermistor' trip indicates that the motor thermistor connected to terminal 4 (Analog/digital input 2) on the control connections has indicated a motor over temperature. If Analog input 2 Thermistor Mode (Pr 07.045) is 1, 2 then a thermistor trip is initiated if the feedback value is higher than Thermistor Trip Threshold (Pr 07.048).
Recommended actions:
• Check Threshold Level (Pr 07.048)
• Check motor temperature
• Check thermistor continuity</td></tr>
<tr><td>User OI ac</td><td>User OI ac</td></tr>
<tr><td>8</td><td>A 'User OI ac' trip is initiated if the output current of the drive exceeds the trip level set by User Over Current Trip Level (Pr 04.041).</td></tr>
<tr><td>User Prog Trip</td><td>Trip generated by an onboard user program</td></tr>
<tr><td>96</td><td>This trip can be initiated from within an onboard user program using a function call which defines the sub-trip number.
Recommended actions:
• Check the user program</td></tr>
<tr><td>User Program</td><td>On board user program error</td></tr>
<tr><td>249</td><td>An error has been detected in the onboard user program image. The sub-trip indicated the reason for the trip.
<table>
<tr><th>Sub-trip</th><th>Reason</th><th>Comments</th></tr>
<tr><td>1</td><td>Divide by zero</td><td></td></tr>
<tr><td>2</td><td>Undefined trip</td><td></td></tr>
<tr><td>3</td><td>Attempted fast parameter access set-up with non-existent parameter</td><td></td></tr>
<tr><td>4</td><td>Attempted access to non-existent parameter</td><td></td></tr>
<tr><td>5</td><td>Attempted write to read-only parameter</td><td></td></tr>
<tr><td>6</td><td>Attempted an over-range write</td><td></td></tr>
<tr><td>7</td><td>Attempted read from write-only parameter</td><td></td></tr>
<tr><td>30</td><td>The image has failed because either its CRC is incorrect, or there are less than 6 bytes in the image or the image header version is less than 5</td><td>Occurs when the drive powers-up or the image is programmed. The image tasks will not run.</td></tr>
<tr><td>31</td><td>The image requires more RAM for heap and stack than can be provided by the drive.</td><td>As 30.</td></tr>
<tr><td>32</td><td>The image requires an OS function call that is higher than the maximum allowed.</td><td>As 30.</td></tr>
<tr><td>33</td><td>The ID code within the image is not valid.</td><td>As 30.</td></tr>
</table></td></tr>
</table>

Trip	Diagnosis
249 (continued)	

Sub-trip	Reason	Comments
34	The derivative image has been changed for an image with a different derivative number.	As 30.
40	The timed task has not completed in time and has been suspended.	Onboard User Program: Enable (Pr **11.047**) is reset to zero when the trip is initiated.
41	Undefined function called, i.e. a function in the host system vector table that has not been assigned.	As 40.
52	Customizable menu table CRC check failed	As 30.
53	Customizable menu table changed	Occurs when the drive powers-up or the image is programmed and the table has changed. Defaults are loaded for the user program menu and the trip will keep occurring until drive parameters are saved.
80	Image is not compatible with the control board	Initiated from within the image code.
81	Image is not compatible with the control board serial number	
100	Image has detected and prevented attempted pointer access outside of the IEC task's heap area.	
101	Image has detected and prevented misaligned pointer usage.	
102	Image has detected an array bounds violation and prevented its access.	
103	Image has attempted to convert a data type to or from an unknown data type, has failed and has shut itself down.	
104	Image has attempted to use an unknown user service function.	
200	User program has invoked a "divide" service with a denominator of zero. (Note that this is raised by the downloaded image and has therefore been given a distinct error code despite being the same fundamental problem as sub-trip 1.)	

Sub-trip	Reason	Comments
201	Parameter access is not supported. An attempt to read database other than the host drive.	
202	Parameter does not exist. Database was host drive but the specified parameter does not exist.	
203	Parameter is read-only.	
204	Parameter is write-only.	
205	Unknown parameter error.	
206	Invalid bit present in parameter. The parameter does not contain the specified bit.	
207	Parameter format lookup failed. Failed to get parameter information data.	
208	An over-range write has been attempted.	

<table>
<tr><th>Trip</th><th>Diagnosis</th></tr>
<tr><td>249
(continued)</td><td>The following table shows the differences when compared to the derivative product image.
<table>
<tr><th>Sub-trip</th><th>Reason</th></tr>
<tr><td>40, 41</td><td>Onboard User Program: Enable (Pr 11.047) is reset to zero when the trip is initiated.</td></tr>
<tr><td>51</td><td>Not applicable as core menu Customization not allowed.</td></tr>
<tr><td>6x</td><td>Not applicable as option module restrictions not allowed.</td></tr>
<tr><td>7x</td><td>Not applicable as option module restrictions not allowed.</td></tr>
<tr><td>100</td><td>Image has detected and prevented attempted pointer access outside of the IEC task's heap area.</td></tr>
<tr><td>101</td><td>Image has detected and prevented misaligned pointer usage</td></tr>
<tr><td>102</td><td>Image has detected an array bounds violation and prevented its access.</td></tr>
<tr><td>103</td><td>Image has attempted to convert a data type to or from an unknown data type, has failed and has shut itself down.</td></tr>
<tr><td>104</td><td>Image has attempted to use an unknown user service function.</td></tr>
<tr><td>200</td><td>User program has invoked a "divide" service with a denominator of zero (Note that this is raised by the downloaded image and has therefore been given a distinct error code despite being the same fundamental problem as sub-trip 1)</td></tr>
</table></td></tr>
<tr><td>User Save</td><td>User Save error / not completed</td></tr>
<tr><td>36</td><td>The User Save trip indicates that an error has been detected in the user save parameters saved in non-volatile memory. For example, following a user save command, If the power to the drive was removed when the user parameters were being saved.
Recommended actions:
• Perform a user save in Pr mm.000 to ensure that the trip doesn’t occur the next time the drive is powered up.
• Ensure that the drive has enough time to complete the save before removing the power to the drive.</td></tr>
<tr><td>User Trip</td><td>User generated trip</td></tr>
<tr><td>40 - 89
112 - 167</td><td>These trips are not generated by the drive and are to be used by the user to trip the drive through an application program.
Recommended actions:
• Check the user program</td></tr>
<tr><td>Watchdog</td><td>Control word watchdog has timed out</td></tr>
<tr><td>30</td><td>The Watchdog trip indicates that the control word has been enabled and has timed out.
Recommended actions:
Once Pr 06.042 bit 14 has been changed from 0 to 1 to enable the watchdog, this must be repeated every 1s or a Watchdog trip will be initiated. The watchdog is disabled when the trip occurs and must be re-enabled if required when the trip is reset.</td></tr>
</table>

8.4 - Serial communication look up table

The trips can be read in Pr 10.020 to 10.029, providing a trip number. The trip number must be checked in the table below to identify the specific trip, then refer to *section 8.3, page 136* for explanations and recommended actions.

N°	Trip	N°	Trip	N°	Trip
1	Reserved	33	Resistance	203	Slot1 Not Fitted
2	Over Volts	34	Keypad Mode	204	Slot1 Different
3	OI ac	35	Control Word	205 - 217	Reserved
4	OI Brake	36	User Save	218	Temp Feedback
5	PSU	37	Power Down Save	219	OHt Control
6	External Trip	38	Reserved	220	Power Data
7	Over Speed	39	An Input 3 Loss	221	Stored HF
8	User OI ac	40 - 89	User trips 40 to 89	222 - 225	Reserved
9 - 10	Reserved	90 - 92	Reserved	226	Soft Start
11	Autotune 1	93	Power Comms	227	Sub-array RAM
12	Reserved	94 - 95	Reserved	228	Output phase U
13	Autotune 3	96	User Prog Trip	229	Output phase V
14 - 17	Reserved	97	Data Changing	230	Output phase W
18	Autotune Stopped	98	Out Phase Loss	231	I cal. range
19	Brake R Too Hot	99	Reserved	232	Drive config
20	Motor Too Hot	100 - 1110	Reserved	233	Reserved
21	OHt Inverter	111	Reserved	234	STO error
22	OHt Power	112 - 167	User Trips 112 to 167	235	Power Board HF
23	Reserved	168 - 172	Reserved	236	No power board
24	Thermistor	173 - 188	Reserved	237	FW incompatible
25	Th Short Circuit	189	An Input 1 OI	238 - 244	Reserved
26	I/O Overload	190	An Input 2 OI	245	Power Boot Mode
27	OHt dc bus	191	An Input 3 OI	246	Derivative ID
28	An Input 1 Loss	192 - 198	Reserved	247	File changed
29	An Input 2 Loss	199	Destination	248	Derivative Image
30	Watchdog	200	Slot1 HF	249	User Program
31	EEPROM Fail	201	Slot1 Watchdog	250 - 255	Reserved
32	Phase Loss	202	Slot1 Error		

8.5 - Alarm indications

An alarm is an indication given from the flashing red LED of the flange option or on the keypad display by alternating the alarm string with the drive status string display. If an action is not taken to eliminate any alarm except “Auto Tune” and “Limit Switch”, the drive may eventually trip. Alarms are not displayed when a parameter is being edited.

Alarm string	Description
Brake Resistor	Brake resistor overload. Braking Resistor Thermal Accumulator Pr **10.039** in the drive has reached 75.0 % of the value at which the drive will trip
Motor Overload	Motor Protection Accumulator Pr **04.019** in the drive has reached 75.0 % of the value at which the drive will trip and the load on the drive is >100 %.
Drive overload	Drive over temperature. Percentage Of Drive Thermal Trip Level Pr **07.036** in the drive is greater than 90 %.
Auto Tune	The autotune procedure has been initialized and an autotune is in progress.
Limit Switch	Limit switch active. Indicates that a limit switch is active and that is causing the motor to be stopped.
Option Slot 1	Option slot alarm.
Low AC	Low voltage mode. See low AC alarm Pr 1**0.107**.
Current Limit	Current limit active. See Current Limit Active Pr **10.009**.
Fan	Fan reversed or failed.

NOTES

NOTES

Nidec

All for dreams

LEROY-SOMER™

Moteurs Leroy-Somer SAS
Siège social : Boulevard Marcellin Leroy - CS 10015
16915 ANGOULÊME Cedex 9

Société par Actions Simplifiées au capital de 65 800 512 €
RCS Angoulême 338 567 258

www.leroy-somer.com