Nidec
All for dreams

Installation guide

Powerdrive MD Smart Equipment MD3 serie

High-power free standing drive solution

Part number: 5704 en - 2021.10 / b

LEROY-SOMER™

NOTE

LEROY-SOMER reserves the right to modify the characteristics of its products at any time in order to incorporate the latest technological developments. The information contained in this document is therefore liable to be changed without notice.

WARNING

For the user's own safety, this variable speed drive must be connected to an approved earth (⏚ terminal).
If accidentally starting the installation is likely to cause a risk to personnel or the machines being driven, it is essential to comply with the power connection diagrams recommended in this manual.

This equipment is fitted with safety devices which, in the event of a problem, control stopping and thus stop the motor or motors. The motors themselves may also become jammed for mechanical reasons. Voltage fluctuations, and in particular power cuts, can also cause the motor to stop. The removal of the causes of the shutdown can lead to restarting, which could be dangerous for certain machines or installations.
In such cases, it is essential that the user takes appropriate precautions against the motor restarting after an unscheduled stop.

The drive(s) which form part of this equipment is(are) designed to be capable of supplying the motor(s) associated with a machine driven beyond its rated speed.
If the motor(s) or the machine are not mechanically designed to withstand such speeds, the user could be exposed to serious danger resulting from their mechanical deterioration.
Before programming a high speed, it is important that the user checks that the installation can withstand it.

This equipment which is the subject of this manual is designed to be integrated in an installation or an electrical machine, and can under no circumstances be considered to be a safety device. It is therefore the responsibility of the machine manufacturer, the designer of the installation or the user to take all necessary precautions to ensure that the system complies with current standards, and to provide any devices required to ensure the safety of equipment and personnel.

LEROY-SOMER declines all responsibility in the event of the above recommendations not being observed.

.....

This manual only describes the general features, installation and control connections for Powerdrive MD Smart equipment. For commissioning, refer to manual ref. 5641.

(In accordance with the low voltage directive 2014/35/EU)

⚠ Throughout the manual, this symbol warns of consequences which can arise from inappropriate use of the drive, since electrical risks can lead to material or physical damage as well as constituting a fire hazard.

1 - General information

Depending on their degree of protection, variable speed drives can contain unprotected live parts, which can be moving or rotating, as well as hot surfaces, during operation.
Unjustified removal of protection devices, incorrect use, faulty installation or inappropriate operation could represent a serious risk to personnel and equipment.
For further information, consult the manual.
All work relating to transportation, installation, commissioning and maintenance must be performed by experienced, qualified personnel (see IEC 364, CENELEC HD 384 or DIN VDE 0100, as well as national specifications for installation and accident prevention).
In these basic safety instructions, qualified personnel means persons competent to install, mount, commission and operate the product and possessing the relevant qualifications.

2 - Use

Variable speed drives are components designed for integration in installations or electrical machines.
When integrated in a machine, commissioning must not take place until it has been verified that the machine conforms with directive 2006/42/EC (Machinery Directive). It is also necessary to comply with standard EN 60204, which stipulates in particular that electrical actuators (which include variable speed drives) cannot be considered as circuit-breaking devices and certainly not as isolating switches.
Commissioning can take place only if the requirements of the Electromagnetic Compatibility Directive (EMC 2014/30/EC) are met.
The variable speed drives meet the requirements of the Low Voltage Directive 2014/35/EU. The harmonized standards of the DIN VDE 0160 series in connection with standard VDE 0660, part 500 and EN 60146/VDE 0558 are also applicable.
The technical characteristics and instructions concerning the connection conditions specified on the nameplate and in the documentation provided must be observed without fail.

3 - Transportation, storage

All instructions concerning transportation, storage and correct handling must be observed.
The climatic conditions specified in the technical manual must be observed.

4 - Installation

The installation and cooling of equipment must comply with the specifications in the manual supplied with the product.
Variable speed drives must be protected against any excessive stress. In particular, there must be no damage to parts and/or modification of the clearance between components during transportation and handling. Avoid touching the electronic components and contact parts.
Variable speed drives contain parts that are sensitive to electrostatic stresses and can easily be damaged if handled incorrectly. Electrical components must not be exposed to mechanical damage or destruction (risks to health!).

5 - Electrical connection

When work is performed on variable speed drives that are powered up, the national accident prevention regulations must be respected.
The electrical installation must comply with the relevant specifications (for example conductor cross-sections, protection via fused circuit-breaker, connection of protective conductor). More detailed information is given in the manual.
Instructions for an installation which meets the requirements for electromagnetic compatibility, such as screening, earthing, presence of filters and correct laying of cables and conductors, are given in the documentation supplied with the variable speed drives. These instructions must be followed in all cases, even if the variable speed drive carries the CE mark. Adherence to the limits given in the EMC legislation is the responsibility of the manufacturer of the installation or the machine.

6 - Operation

Installations in which variable speed drives are to be integrated must be fitted with additional protection and monitoring devices as laid down in the current relevant safety regulations, such as the law on technical equipment, accident prevention regulations, etc. Modifications to the variable speed drives using control software are permitted.
Active parts of the device and the live power connections must not be touched immediately after the variable speed drive is powered down, as the capacitors could still be charged. In view of this, the warnings fixed to the variable speed drives must be observed.
Permanent magnet motors generate electrical energy while they are rotating, even when the drive is switched off. In this case, the drive continues to be powered by the motor terminals. If the load is capable of turning the motor, a switching device must be provided upstream of the motor to isolate the drive during maintenance operations.
During operation, all doors and protective covers must be kept closed.

7 - Servicing and maintenance

Refer to the manufacturer's documentation.
See the Maintenance section in this document.

This manual is to be given to the end user.

This manual describes the installation of electrical equipment of the **Powerdrive MD Smart type**.

Powerdrive MD Smart Equipment

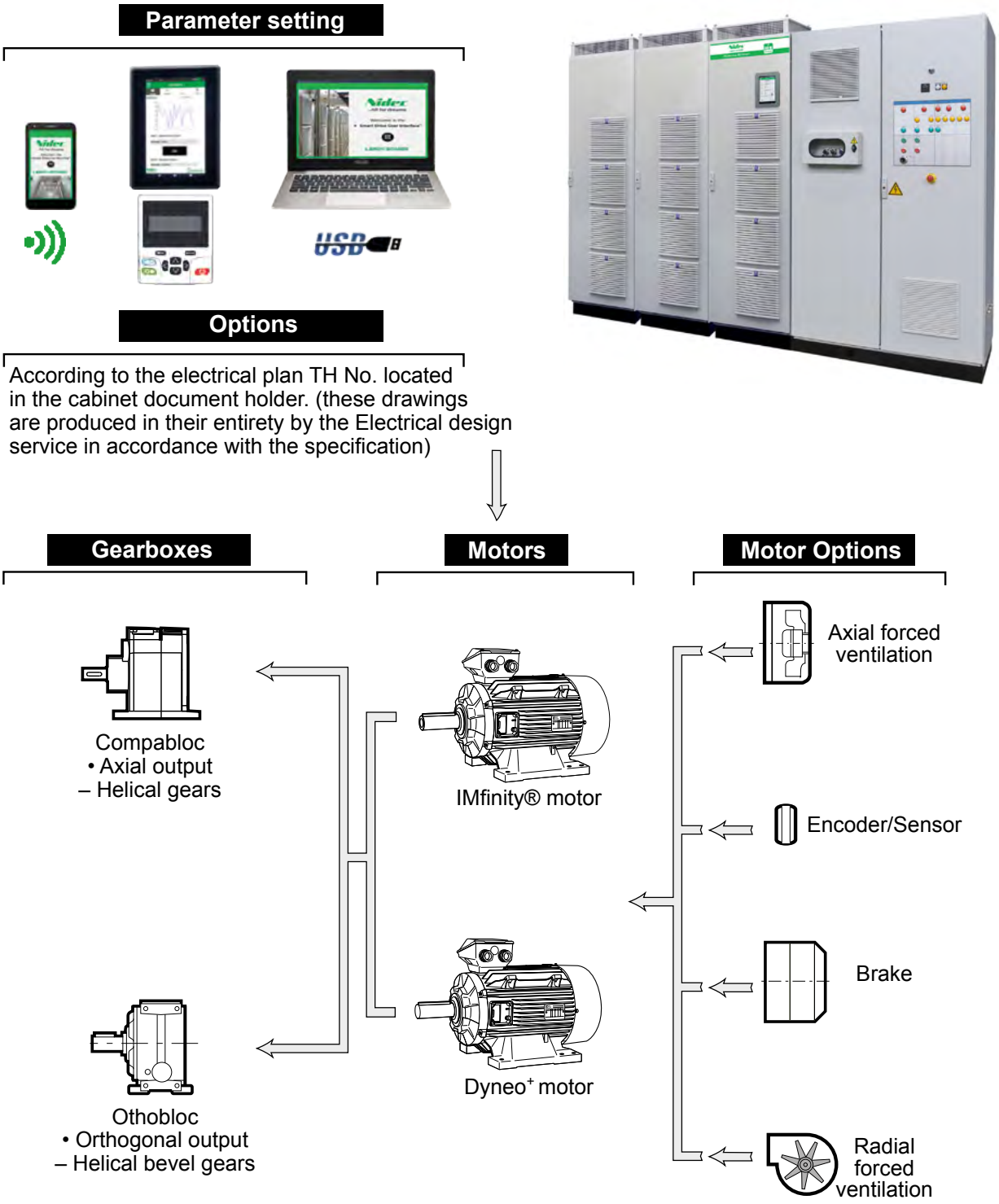

CONTENTS

1 - GENERAL INFORMATION

1.1 - General

The **Powerdrive MD Smart equipment** is one (or more) variable speed drive with very high performance levels that can be used to control:
- Induction motors without a speed sensor (open loop mode select) for applications that do not need rated torque control above 1/10th of the rated speed.
- Induction motors or synchronous permanent magnet motors with virtual speed feedback (flux vector mode with software sensor function) for applications that require rated torque control from 1/20th of the rated speed.

Combined with the MDX-ENCODER option, the **Powerdrive MD Smart equipment** can also be used to control asynchronous or synchronous magnet machines for applications that require very high dynamic performances, torque control from zero speed or high speed accuracy (closed loop vector mode with speed feedback).
The performance of the **Powerdrive MD Smart equipment** is compatible with use in all 4 quadrants of the torque/speed plane with the braking module option incorporated.

With IP54 protection (optional), installation is possible directly next to the machine in harsh environments.

1.2 - Designation of the equipment

Equipment may comprise several variable speed drives to control several axis depending on the requirements defined by the client in the specifications. These various variable speed drives may be supplied by the electrical power supply located upstream or by the DC bus delivered by the equipment.
Equipment makes reference to a drawing number THxxxxx established by the Electrical design service, in accordance with a specification defined with the client.
This entire plan is sent to the client for validation before production.

The drawings THxxxxx contain:
- Cover page
- Sheet list
- Wiring rules
- Electrical drawings
- Layout
- Front view of the cabinet with the various dimensions
- Bottom view for fixing to the floor
- Various terminal block connection diagrams
- Parts list giving details of the equipment.

The equipment used is **EC** compliant (compliant with EMC 2014/30/EC and Low Voltage 2014/35/EU Directives).
Equipment made in accordance with specifications and for the organisation's use are marked **EC** in accordance with the LV Directive and EMC compliant.
The cross-section of the supply PE is calculated in accordance with standard NFC 15-100 (equivalent to IEC 364).

Nameplate

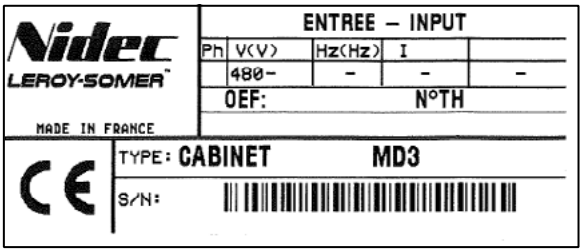

I(A) = maximum input current for 400 V supply, in normal duty. If there are several variable speed drives, I(A) is equal to the sum of the currents for all of the variable speed drives.
OEF No. = ALICE order number
TH No. = electrical drawing number

The nameplate is located on the outside of the cabinet, at the top right-hand side.

1.3 - Environmental characteristics

Characteristics	Level
Protection	IP21 (IP54 as an option)
Storage and transport temperature	-30°C to +60°C (see section 7.1)
Ambient operating temperature (outside the drive cabinet)	-10°C to +40°C, up to +50°C with derating
Classification of environmental conditions	In accordance with IEC 60721-3-3: • Biological classification in accordance with class 3B1 • Classification as regards chemically active substances in acc. with class 3C2 • Classification as regards mechanically active substances in acc. with class 3S2
Relative humidity	In accordance with IEC 60068-2-56 < 90% non condensing
Altitude	≤ 1,000 m without derating > 1,000 m up to 3,000 m maximum (as required): • Current derating of 1% per additional 100 m *E.g.: for 1,300 m, derate the Ico and Imax currents by 3%* • Operating temperature derating of 0.6°C per 100 m *E.g.: for 1,300 m, the electrical characteristics are maintained for an ambient temperature of [40°- (3 x 0.6°)] = 38.2°C.*
Vibrations	In accordance with IEC 60068-2-6 • Exposed product: 2 m/s² (9-200 Hz), 0.6 mm (2-9 Hz) • Packaged product: 10m/s² (9-200 Hz), 3mm (2-9 Hz)
Shocks	Packaged product: in accordance with standard IEC 60068-2-29
Atmospheric pressure	700 to 1060 hPa

1.4 - Electrical characteristics

All work relating to installation, commissioning and maintenance must be carried out by experienced, qualified personnel.

1.4.1 - General characteristics

Characteristics	Level
Power supply voltage	• 6P or Multi-Pulses: «T» rating 400V -10% to 480V +10% «TH» rating 525V -10% to 690V +10% • Regen : «T» rating 400V -10% to 480V +5% «TH» rating 525V -10% to 690V +5%
Phase voltage imbalance	< 2%
Input frequency	"T" ratings: 50 or 60 Hz ± 5% "TH" ratings: 50 Hz ± 5%
Maximum number of power-ups per hour (power)	20
Output frequency range	0 to 590 Hz
ROHS conformance	Conforming to standard 2002-95-EC

For operation with a neutral IT point connection, follow the instructions given in section 4.4.3

1.4.2 - Electrical characteristics

The various tables describe the electrical characteristics of each of the variable speed drives in the equipment.
Ico: Continuous output current.
Pout : Output power.
Imax (60s): Maximum output current, available for 60 seconds every 600 seconds
Heavy duty: For heavy duty constant torque machines (presses, grinders, hoisting, etc.) and all applications where significant inertia has to be accelerated quickly (centrifuges, translation of travelling cranes, etc.).
Normal duty: For low overload constant torque or centrifugal torque machines (fans, compressors, etc.).

CAUTION: In its factory setting, the drive operates with a switching frequency of 3 kHz.

400V to 480V 3-phase supply
Switching frequency = 3 kHz - ambient temperature ≤ 40°C - altitude ≤ 1000 m.

Rating	Heavy duty			Normal duty			Imax (3s) (A)	Imax (60s) (A)
	Pout at 400V (kW) (1)	Pout at 460V (HP) (1)	Ico (A)	Pout at 400V (kW) (1)	Pout at 460V (HP) (1)	Ico (A)		
75TN	55	75	110	75	100	139	175	161
120TN	90	125	159	110	150	202	254	233
150TN	110	150	195	132	175	248	312	286
180TN	132	175	236	160	200	301	378	347
220TN	160	200	306	200	300	390	490	449
270TN	200	300	373	250	350	475	596	547
340TN	250	350	464	315	350	590	742	680
430TN	315	350	561	400	450	713	896	822
470TN	355	450	649	450	500	826	1038	952
570TN	400	500	699	500	650	889	1117	1024
680TN	500	650	900	630	800	1145	1439	1319
860TN	630	800	1087	800	900	1384	1739	1594
940TN	675	900	1259	900	1000	1603	2014	1846
1140TN	850	1000	1355	1000	1250	1725	2167	1987
1290TN	1000	1250	1614	1200	1400	2055	2582	2366
1410TN	1200	1400	1869	1350	1500	2379	2989	2740
1710TN	1350	1500	2012	1500	2000	2561	3218	2949
2280TN	1600	2000	2655	2000	2500	3379	4245	3892
2850TN	2000	2500	3318	2500	3250	4223	5307	4864

(1) Motor winding voltage

525V to 690 V 3-phase supply
Switching frequency = 3 kHz - ambient temperature ≤ 40°C - altitude ≤ 1000 m.

Rating	Heavy duty			Normal duty			Imax (3s) (A)	Imax (60s) (A)
	Pout at 525 V (HP) (1)	Pout at 690V (kW) (1)	Ico (A)	Pout at 525 V (HP) (1)	Pout at 690V (kW) (1)	Ico (A)		
150TH	110	110	115	132	132	143	195	175
180TH	132	132	143	160	150	172	230	211
220TH	160	150	195	250	200	248	315	286
340TH	250	250	295	315	350	375	475	432
430TH	315	350	359	400	400	456	580	526
570TH	400	450	406	500	500	516	648	594
680TH	500	500	572	630	700	728	922	838
860TH	630	700	697	675	800	886	1125	1020
1140TH	675	900	787	850	1050	1000	1257	1152
1290TH	850	1050	1034	1000	1200	1315	1670	1515
1710TH	1000	1400	1169	1350	1600	1485	1866	1711
2280TH	1350	1800	1542	1500	2000	1960	2462	2257
2850TH	1500	2250	1928	1800	2500	2450	3110	2851

(1) Motor winding voltage

1.4.3 - Derating at low frequency

Measuring the temperature of the power bridges in conjunction with thermal modelling of the IGBTs ensures protection against overheating of the **Powerdrive MD Smart**.

At low output (motor) frequencies, IGBT modules are subject to significant temperature cycling, which can reduce their life. To prevent this risk, the curve opposite indicates the derating for output currents ***Ico*** and ***Imax*** when operating at low motor frequencies in continuous operation.

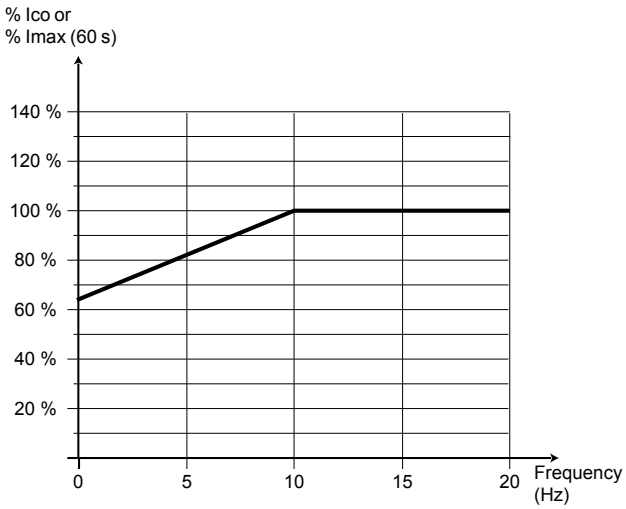

1.4.4 - Standard equipment

The **Powerdrive MD Smart** is equipped as standard with a line choke and high-speed fuses.
In some cases, after a specific design study the line choke may be omitted. The inductance value of the transformer supplying the equipment may act as a line choke.

1.4.5 - Derating according to the temperature and switching frequency

See the derating tables on the next pages.

For intermediate switching frequencies (3.5 - 4.5 - 5.5 kHz), the available current value will be the average of the upper frequency and lower frequency currents.

Rating	Ambient temperature	INVERTER										RECTIFIER 400V			RECTIFIER 480V		
		Isp output current (A)										Power supply current			Power supply current		
		Normal duty				Heavy duty				Imax 3s (A)	Imax 60s (A)	Input current (A)	Imax 60s (A)	Idc (A)	Input current (A)	Imax 60s (A)	Idc (A)
		3kHz	4kHz	6kHz	8kHz	3kHz	4kHz	6kHz	8kHz								
75TN	40°C	139	130.8	114.6	100.3	110	101.2	88.82	77.36	175	161	130	201	159	108	167	132
	50°C	126	119	104	91	99	92	80	70			118		144	98		120
120TN	40°C	202	171.9	145.2	125.1	159	153.8	129.9	112.7	254	233	196	303	240	157	243	192
	50°C	183	155.7	131.5	113.3	144	139.3	117.6	102.1			177		217	142		174
150TN	40°C	248	229.2	189.1	159.5	195	193.9	160.4	134.7	312	286	235	369	282	215	338	263
	50°C	225	207.6	171.3	144.5	177	175.6	145.3	122			213		255	195		238
180TN	40°C	301	278.9	229.2	193.9	236	230.2	189.1	160.4	378	347	282	443	345	263	413	322
	50°C	272	252.6	207.6	175.6	214	208.5	171.3	145.3			255		312	238		291
220TN	40°C	390	367.7	324.7	286.5	306	295.1	259.8	230.2	490	449	377	593	462	311	489	381
	50°C	353	333	294.1	259.5	277	267.3	235.3	208.5			342		419	282		345
270TN	40°C	475	434.5	372.5	321.8	373	341.9	293.2	253.1	596	547	457	719	538	367	576	449
	50°C	430	393.6	337.4	291.5	338	309.7	265.6	229.2			414		487	332		407
340TN	40°C	590	530	437.4	369.6	464	416.4	343.8	290.3	742	680	568	893	678	456	716	558
	50°C	535	480.1	396.2	334.8	420	377.1	311.4	263			515		614	413		505
430TN	40°C	713	654.2	560.6	484.2	561	513.8	440.3	380.1	896	822	669	1052	800	544	855	667
	50°C	646	592.5	507.8	438.6	508	465.4	398.8	344.3			606		725	493		604
470TN	40°C	826	756.4	639.9	549.1	649	594	503.3	431.7	1038	952	796	1250	926	630	990	772
	50°C	748	685.1	579.6	497.4	588	538	455.9	391			721		839	571		699
570TN	40°C	889	816.5	659	568.2	699	641.8	517.6	446.9	1117	1024	856	1344	1009	687	1079	841
	50°C	805	739.6	596.9	514.7	633	581.3	468.8	404.8			775		914	622		762
680TN	40°C	1145	1028	848.5	717	900	807.8	667	563.2	1439	1319	1061	1667	1248	884	1389	1083
	50°C	1037	931.3	768.6	649.4	815	731.7	604.1	510.1			961		1131	801		981
860TN	40°C	1384	1269	1088	939.3	1087	996.8	854.1	737.4	1739	1594	1282	2013	1570	1070	1680	1310
	50°C	1254	1149	985	850.8	985	902.8	773.6	667.9			1161		1422	969		1187
940TN	40°C	2603	1467	1241	1065	1259	1152	976.4	837.4	2014	1846	1481	2327	1814	1237	1943	1515
	50°C	1452	1329	1124	964.9	1141	1044	884.4	758.5			1342		1643	1120		1372
1140TN	40°C	1725	1584	1278	1102	1355	1245	1004	867.1	2167	1987	1598	2510	1957	1331	2091	1630
	50°C	1562	1435	1158	998.5	1228	1128	909.5	785.4			1447		1772	1206		1477
1290TN	40°C	2055	1884	1614	1394	1614	1480	1268	1095	2582	2366	1903	2990	2331	1586	2492	1943
	50°C	1861	1706	1462	1263	1462	1340	1148	991.5			1724		2111	1437		1760
1410TN	40°C	2379	2178	1843	1581	1869	1711	1449	1243	2989	2740	2204	3462	2700	1836	2885	2249
	50°C	2155	1973	1669	1432	1693	1550	1313	1126			1996		2445	1663		2037
1710TN	40°C	2561	2352	1898	1636	2012	1848	1491	1287	3218	2949	2345	3683	2871	1954	3069	2393
	50°C	2319	2130	1719	1482	1822	1674	1350	1166			2124		2601	1770		2168
2280TN	40°C	3379	3103	2504	2159	2655	2439	1967	1698	4245	3892	3094	4860	3790	2579	4050	3158
	50°C	3060	2810	2268	1956	2404	2209	1782	1538			2803		3432	2336		2860
2850TN	40°C	4223	3878	3130	2699	3318	3048	2459	2123	5307	4864	3913	6146	4792	3260	5121	3993
	50°C	3825	3513	2835	2445	3006	2761	2227	1923			3544		4340	2953		3617

Rating	Ambient temperature	INVERTER										RECTIFIER 690V		
		Isp output current (A)										Power supply current		
		Normal duty				Heavy duty				Imax 3s (A)	Imax 60s (A)	Input current (A)	Imax 60s (A)	Idc (A)
		3kHz	4kHz	6kHz	8kHz	3kHz	4kHz	6kHz	8kHz					
150TH	40°C	143	119	91	72	115	96	73	57	195	175	136	210	166
	50°C	130	108	82	65	104	87	66	52			123		150
180TH	40°C	172	143	110	86	143	119	92	72	230	211	170	263	208
	50°C	156	130	99	78	130	108	83	65			154		189
220TH	40°C	248	203	153	153	195	159	120	96	315	286	222	343	271
	50°C	225	184	138	138	176	144	109	87			201		246
340TH	40°C	375	341	256	201	295	268	202	158	475	432	334	518	409
	50°C	340	309	232	182	267	243	183	143			303		371
430TH	40°C	456	415	310	244	359	327	244	192	580	526	407	630	498
	50°C	413	376	281	221	325	296	221	174			368		451
570TH	40°C	516	439	329	260	406	397	298	235	648	594	497	770	608
	50°C	467	398	298	235	368	360	270	213			450		551
680TH	40°C	728	661	497	389	572	521	391	306	922	838	699	1083	856
	50°C	659	599	450	352	519	472	354	277			633		775
860TH	40°C	886	806	602	472	697	634	474	372	1125	1020	850	1317	1041
	50°C	802	730	545	428	631	574	430	337			770		943
1140TH	40°C	1000	852	639	504	787	771	578	456	1257	1152	960	1487	1175
	50°C	906	772	579	456	713	698	524	413			869		1065
1290TH	40°C	1315	1196	894	701	1034	941	704	553	1670	1515	1262	1955	1545
	50°C	1191	1084	810	635	937	852	638	501			1143		1399
1710TH	40°C	1485	1265	949	748	1169	1144	858	677	1866	1711	1425	2208	1745
	50°C	1345	1146	859	678	1059	1036	777	613			1291		1581
2280TH	40°C	1960	1669	1252	987	1542	1510	1132	893	2462	2257	1880	2914	2303
	50°C	1775	1512	1134	894	1397	1367	1026	809			1703		2086
2850TH	40°C	2450	2087	1565	1234	1928	1887	1415	1116	3110	2851	2350	3642	2878
	50°C	2219	1890	1418	1118	1746	1709	1282	1011			2129		2607

2 - MECHANICAL INSTALLATION

• It is the responsibility of the owner or user to ensure that installation, operation and maintenance of the equipment and its options comply with legislation relating to the safety of equipment and personnel, and with the current regulations in the country of use.
• The equipment must be installed in an environment free from conducting dust, corrosive fumes, gases and fluids, and condensation (class 2 according to IEC 664-1). The cabinet must not be installed near flammable materials. The equipment must not be installed in hazardous areas unless it is in an appropriate enclosure. In this case the installation must be approved.
In atmospheres where condensation can form, install a heating system (to be switched off when the drive is operating).
• Prevent access by unauthorized personnel.

RECOMMENDATIONS:
• The cabinet must be fixed to a flat, even floor.
For cabinets equipped with climate control the recommended flatness tolerance is 4 mm every 2 m.
The floor must be solid enough to withstand the mass of the electrical equipment.
A minimum distance of 1000 mm must be left for access to the front face of the cabinet.
• The cabinet is to be located in a well-lit location (200 lux minimum).
• Each door has a locking system (capable of being opened using a tool, it must be kept closed with a key).

2.1 - Packaging

There are two possible types of packing:
- SEI4C maritime packaging

- slatted packaging

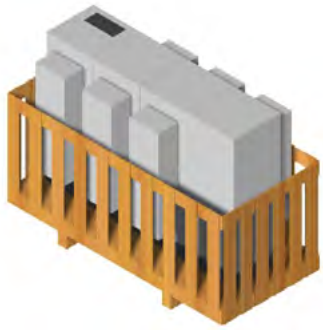

The packaging materials used may vary depending on the type of transport. Here is the list:

Raw material	Method of recycling possible
Plywood or wood chip	Recycling or disposal
Raw wood products	Recycling or disposal
Anti-static film	Recycling or disposal
Heat-shink envelope Material: Polyester	Recycling or disposal
Strapping	Recycling or disposal
Wrap around carton and reinforcements	Recycling or disposal
Corner protections Material: Polyester	Recycling or disposal
Corner protection adhesive Material: Acrylic co-polymer + paper	Recycling or disposal
Foam Material: Polyethylene	Recycling or disposal

2.2 - Checks on receipt

Make sure that the drive cabinet has been transported vertically, otherwise it could be damaged.

Before installing the equipment, check that:
- the equipment has not been damaged during transport,
- the information on the nameplate is compatible with the power supply.

2.3 - Handling

• The centre of gravity could be high up and/or off-centre, so beware of the risk of the drive cabinet tipping over.
• Check that the handling equipment is suitable for the weight to be handled.
• The lifting accessories provided are limited solely to handling the drive cabinet. If subsequent handling operations are carried out, always check that these lifting accessories are in good condition.

Above 2400 mm wide (W), a baseplate 100 mm high is installed as standard to ensure the rigidity of all the drive cabinets and for lifting them (if necessary refer to the drawing of the device supplied in the THxxxxx plan).

W = 400mm
or 600 mm
or 600 + 400 mm

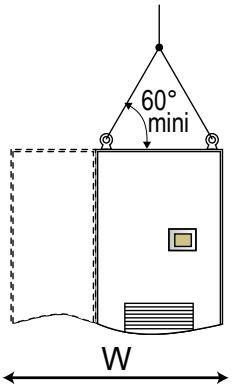

Lifting with additional
transportation baseplate

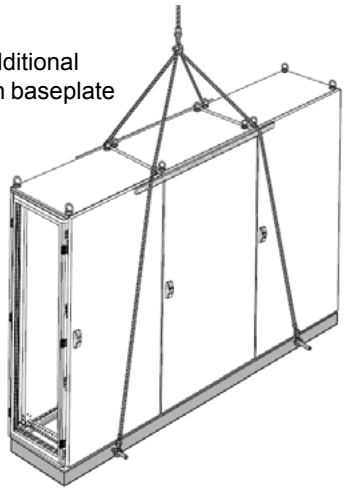

W = 2x 400mm
or 2x 600 mm
or 2x 600 + 400 mm

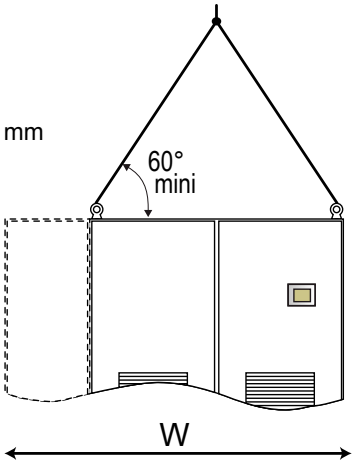

2.4 - Installation recommendations

Ensure that hot air is not being recycled via the air inlets by leaving sufficient free space at the rear of the equipment or by providing a means of evacuating the hot air expelled by the product. If necessary, add a suction hood. Never obstruct the drive ventilation grilles; the air intake filters must be cleaned and changed regularly.

After connecting the power, reposition the cable bush plates at the back of the drive cabinet and fill any gaps with expanding foam.

W = 3x 400mm
or 3x 600 mm

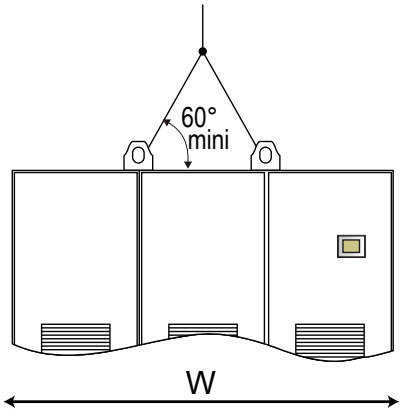

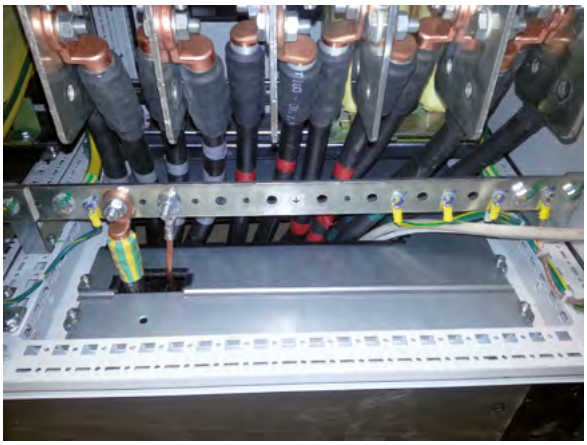

W = 4x 400mm
or 4x 600 mm

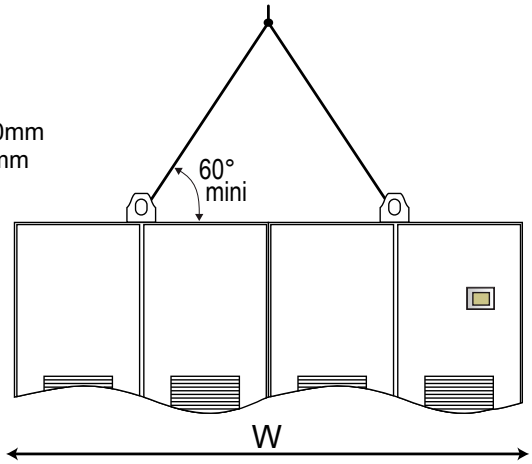

2.5 - Dimensions

The details of the various dimensions of the **Powerdrive MD Smart** equipment are to be found in the "Front face" folio of the TH electrical plan. See example below:

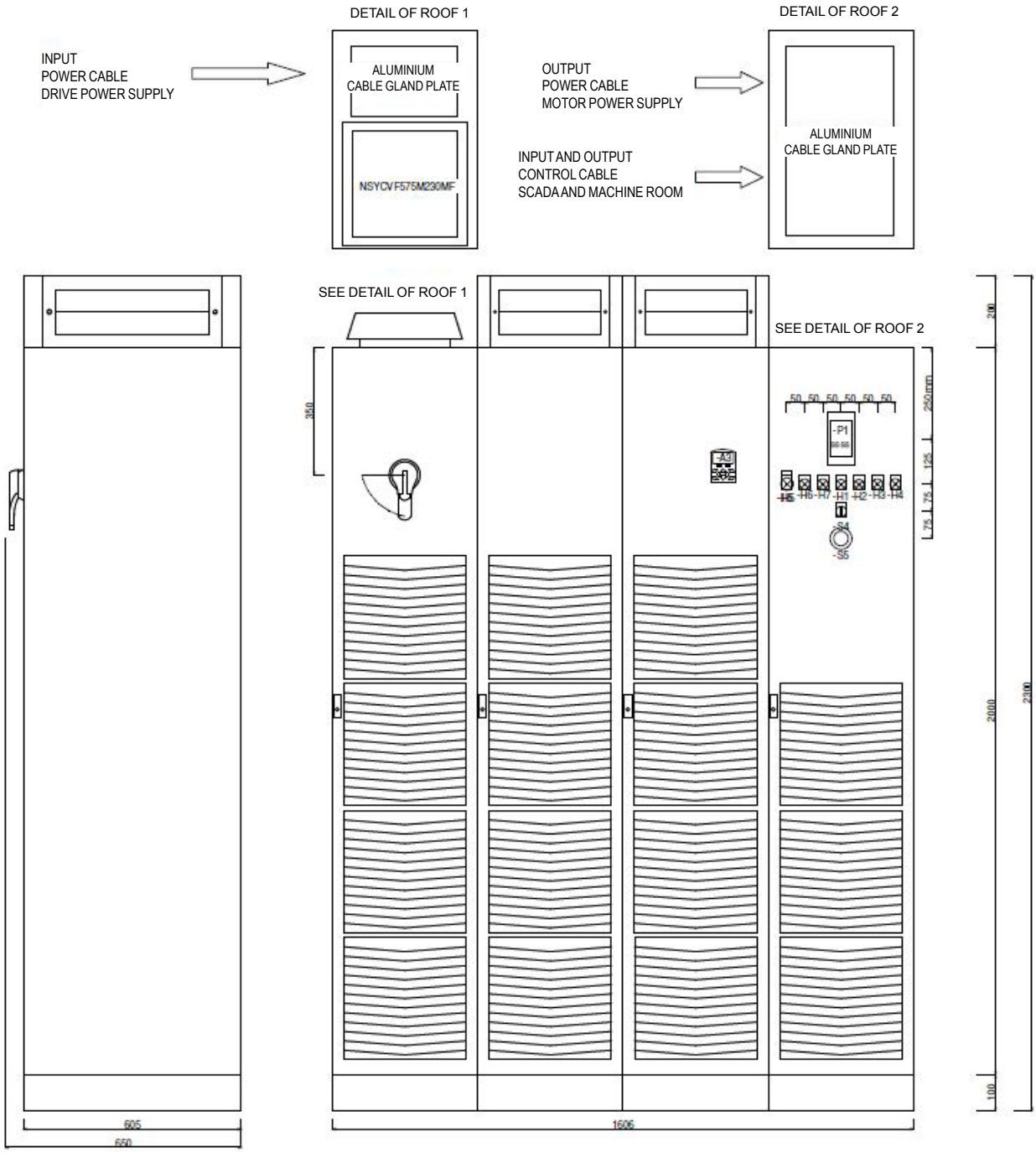

NB: The masses, losses and flow rates of the Powerdrive MD Smart equipment are specific to each configuration resulting from the customer's specifications. To obtain them, please contact Moteurs Leroy-Somer.

2.6 - Type of cooling

2.6.1 - Air cooling

Air can exit on all sides of the roof. The drive cabinet can be installed with one side only against a wall (with the IP21 or IP54 roofs). Under no circumstance must the difference between the drive cabinet internal temperature and the ambient temperature outside the cabinet exceed 5°C.

In atmospheres where condensation can form, install a heating system (to be switched off when the drive is operating). It is advisable to control the heating system automatically.

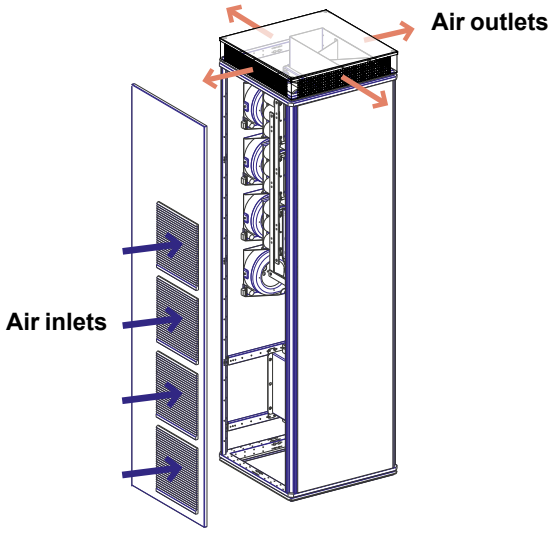

2.6.2 - Liquid cooling

The type of connection and its position will be detailed on the layout diagram of the TH plan.
To avoid condensation in the drive cabinet:
- Respect the temperature of the liquid cooling indicated in the table below
- Stop the liquid circulation when the drive is switched off for more than one minute.

Minimum temperature of liquid cooling		Air temperature inside the drive cabinet (°C) at 1 bar								
		10°C	15°C	20°C	25°C	30°C	35°C	40°C	45°C	50°C
Relative humidity (%)	40%	-2.6	1.5	6.0	10.5	15.0	19.4	23.8	28.2	32.8
	50%	0.1	4.7	9.3	13.9	19.0	23.0	27.6	32.1	36.7
	60%	2.6	7.3	12.0	16.7	21.0	26.0	30.7	35.4	
	70%	4.8	9.6	14.4	19.1	24.0	29.0	33.5	38.2	
	80%	6.7	11.6	16.4	21.3	26.0	31.0	35.9		
	90%	8.4	13.4	18.3	23.2	28.0	33.0	38.0		

Example: at an air temperature of 40°C and a relative humidity of 50 % inside the drive cabinet.
The temperature of the liquid cooling should not fall below 27,6°C

To ensure the temperature of the above liquid cooling, a 3-way valve or variable speed pump must be installed.

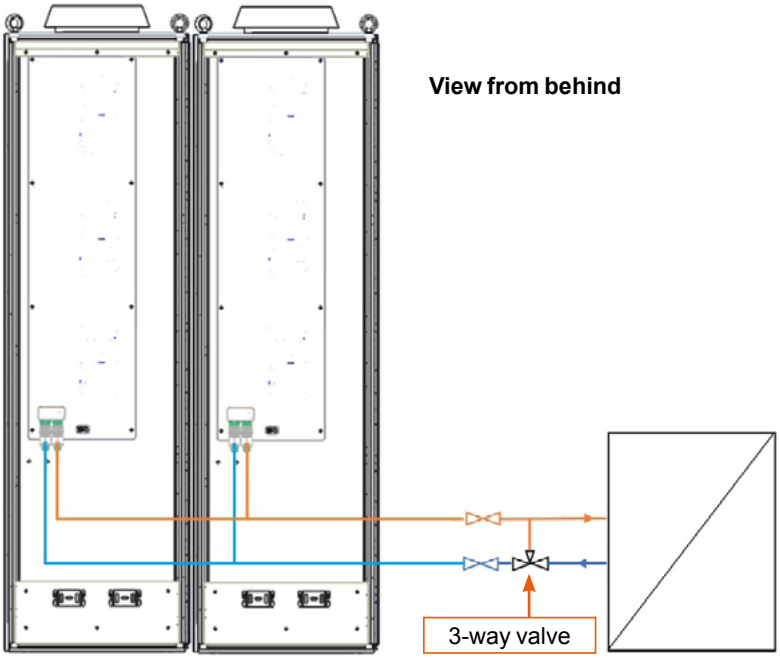

Note:
- The recommended fluid is glycolated water, mix at 25%, the maximum temperature is 40°C.
- Salt water is prohibited.
- We recommend the use of an external cooling loop so that the fluid is used in closed circuit.
- A controlled heating system must be installed to keep the minimum temperature of 5° C inside the enclosure at start-up (to be disabled when the variable speed drive is in running order).

2.6.3 - Recommendations

• **Characteristics of the cooling liquid** :
Since the most stressed components of the drive are completely cooled by liquid, The characteristics of the liquid directly affect the quality of the cooling and therefore the lifetime of the variable speed drive. Prevent electrochemical corrosion and sediment obstruction by ensuring that the cooling agent used meets the following criteria:
• pH 7.5 to 8.5
• CaCO3 alkalinity: 100 to 400 mg/l
• chloride Cl-: <200 mg/l
• conductivity: 1000 to 1500 µS/cm
• **Liquid temperature increase** :
At steady speed The maximum heating of the coolant at the variable speed drive outlet with the recommended minimum flow is 8°C.
• **Protection against electrochemical corrosion:**
When an external coolant loop is used, it is recommended to add an inhibitor to prevent electrochemical corrosion. If there is no external loop, this corrosion shall be avoided by using materials compatible with the materials used in the cooling circuit of the variable speed drive: question to be asked.
• **Protection against sediment obstructions:**
A coolant with too many particles can speed up the sediment-induced blockage of radiators, so it is recommended that filters be installed upstream of the drive fluid system.
• **Protection against stopping the circulation of liquid:**
To avoid harmful overheating, a liquid circulation monitoring relay must be cabled to the variable speed drive's safety chain.

2.6.4 - Drainage and maintenance

The frequency of drainage and maintenance cycles depends on the quality of the coolant. These cycles must therefore be determined based on the quality of the fluid used and designed according to the installation. Temperature elevations caused by passive components and circuit boards can create condensation on heat sinks or pipe fittings, depending on the humidity in the air and the temperature difference between the interior of the enclosure and the cooling circuit.
It is therefore advisable to have a coolant temperature as close as possible to the internal temperature of the enclosure, depending on the use of the variable speed drive. This can be achieved by reducing the ambient temperature or increasing the temperature of the fluid (respect the maximum temperatures described in section 3.5.2).

3 - CONNECTIONS

• All connection work must be performed by qualified electricians in accordance with the laws in force in the country where the drive is installed. This includes grounding to ensure that no directly accessible part of the equipment can be at the AC supply voltage or any other voltage which may be dangerous.
• The drive must be supplied via an approved circuit-breaking device so that it can be powered down safely.
• The optional switch supplied with the drive does not isolate the drive input busbars. It must without fail be associated with a circuit-breaking device in the switchboard.
• The equipment power supply must be protected against overloads and short-circuits.
• Check that the voltage and current of the drive, the motor and the AC supply are compatible.
• The voltages on the connections of the AC supply, the motor, the braking resistor or the filter can cause fatal electric shocks. The protective plates supplied with the drive must always be installed correctly to protect the user against direct electric shocks.
• Only one permanent magnet motor can be connected to each drive output. It is advisable to install a circuit-breaking device between the permanent magnet motor and the drive output to eliminate the risk of hazardous voltage feedback when performing maintenance work.
• Also comply with the recommendations in section 7.

3.1 - Power connections

3.1.1 - General

Details of the power connections for the **Powerdrive MD Smart** equipment are given in the Electrical plan THxxxxx.

The **Powerdrive MD Smart** with ratings higher than 570T are obtained by connecting lower ratings in parallel.

• The cables for each of the motor U/V/W phases must be distributed evenly over the U/V/W connection plates in each drive cabinet.

3.1.2 - Connection terminal characteristics

The following characteristics only describe an equipment containing a single drive, from 1000T to 1400T and from 270TH to 1500TH.
For highly-specific equipment (high power > 1400T, DC BUS, equipment with several drives), please refer to electrical plan THxxxxx for information on the connection of power terminals to the mains supply.

Functions/ connections	Marking	Type of connection and tightening torque		
		100T to 150T	180T to 270T	340T to 1400T 270TH to 1500TH
AC power supply	L1, L2, L3, or R, S, T	M10 screw bolt - 20 Nm		M12 screw bolt - 30Nm
Motor outputs	U , V, W			
Earth	PE	M10 bolt - 20 Nm		
Braking resistor (1)	BR1, BR2	M8 bolt - 12Nm		

Do not exceed the indicated maximum tightening torque.

(1) If the braking transistor option is installed.

3.1.3 - Power terminal block location

Details of the position of various terminal blocks in the cabinet are to be found in the layout sheet of the electrical plan THxxxxx supplied with the cabinet.
For wiring details of the Power and control terminal blocks, refer to the "Terminal block" folio.

3.1.4 - Cables and fuses

The following characteristics only describe equipment containing one drive. For other equipment (high power > 940T and 680TH, DC BUS, equipment with several drives), the cross-sections are specific and must be re-calculated. If necessary contact Leroy-Somer. For this equipment, it should be noted that the I_L is equal to sum of I_L for each drive present in the cabinet. The line protection will therefore need to be re-calculated.

• It is the responsibility of the user to connect and fit protective devices for the Powerdrive MD Smart in accordance with the legislation and regulations in force in the country of use. This is particularly important as regards the size of the cables, the type and rating of fuses, the earth or ground connection, powering down, acknowledging trips, isolation and protection against overcurrents.
• The installation must have a short-circuit current (Isc) > 20 I_L at the point of drive connection.
• This table is given for information only, and must under no circumstances be used in place of the current standards.

I_L: Maximum line current **Ico:** Continuous output current

Rating POWERDRIVE	AC supply 380-480V - 50Hz			Motor		
	I_L (A)	Fuses gG type (1)	Cable cross-section (mm²) (2) (4) (5)	Overload	Ico (A)	Cable cross-section (mm²) (3) (4) (5)
75TN	130	160	3x70 + PE	Heavy	110	3x70 + PE
				Normal	139	3x70 + PE
120TN	196	200	3x120 + PE	Heavy	159	3x120 + PE
				Normal	202	3x120 + PE
150TN	235	315	3x150 + PE	Heavy	195	3x150 + PE
				Normal	248	3x150 + PE
180TN	282	315	3x240 + PE	Heavy	236	3x240 + PE
				Normal	301	3x240 + PE
220TN	377	400	2x(3x95) + PE	Heavy	306	2x(3x95) + PE
				Normal	390	2x(3x95) + PE
270TN	457	500	2x(3x150) + PE	Heavy	373	2x(3x150) + PE
				Normal	475	2x(3x150) + PE
340TN	568	630	2x(3x185) + PE	Heavy	464	2x(3x185) + PE
				Normal	590	2x(3x185) + PE
430TN	669	800	2x(3x240) + PE	Heavy	561	2x(3x240) + PE
				Normal	713	2x(3x240) + PE
470TN	796	800	3x(3x185) + PE	Heavy	649	3x(3x185) + PE
				Normal	826	3x(3x185) + PE
570TN	856	1000	4x(3x150) + PE	Heavy	699	4x(3x150) + PE
				Normal	889	4x(3x150) + PE
680TN	1061	1250	4x(3x185) + PE	Heavy	900	4x(3x185) + PE
				Normal	1145	4x(3x185) + PE
860TN	1282		4x(3x240) + PE	Heavy	1087	4x(3x240) + PE
				Normal	1384	4x(3x240) + PE
940TN	1481			Heavy	1259	
				Normal	1603	
1140TN	1598			Heavy	1355	
				Normal	1725	
1290TN	1903			Heavy	1614	
				Normal	2055	
1410TN	2204			Heavy	1869	
				Normal	2379	
1710TN	2345			Heavy	2012	
				Normal	2561	
2280TN	3094			Heavy	2655	
				Normal	3379	
2850TN	3913			Heavy	3318	
				Normal	4223	

Rating POWERDRIVE	AC supply 500-690V - 50Hz			Motor		
	I_L (A)	Fuses gG type (1)	Cable cross-section (mm²) (2) (4)	Overload	Ico (A)	Cable cross-section (mm²) (3) (4)
150TH	136	160	3x120 + PE	Heavy	115	3x120 + PE
				Normal	143	3x120 + PE
180TH	170	200	3x120 + PE	Heavy	104	3x120 + PE
				Normal	172	3x120 + PE
220TH	222	250	3x150 + PE	Heavy	195	3x150 + PE
				Normal	248	3x150 + PE
340TH	334	400	2x(3x95) + PE	Heavy	295	2x(3x95) + PE
				Normal	375	2x(3x95) + PE
430TH	407	500	2x(3x150) + PE	Heavy	359	2x(3x150) + PE
				Normal	456	2x(3x150) + PE
570TH	497	500	2x(3x185) + PE	Heavy	406	2x(3x185) + PE
				Normal	516	2x(3x185) + PE
680TH	699			Heavy	572	
				Normal	728	4x(3x240) + PE
860TH	850			Heavy	697	
				Normal	886	4x(3x150) + PE
1140TH	960			Heavy	787	
				Normal	1000	4x(3x240) + PE
1290TH	1262			Heavy	1034	
				Normal	1315	
1710TH	1425			Heavy	1169	
				Normal	1485	
2280TH	1880			Heavy	1542	
				Normal	1960	
2850TH	2350			Heavy	1928	
				Normal	2450	

Note: The line current value I_L is a typical value which depends on the source impedance.

(1) The aR semi-conductor fuses included as standard do not protect the drive power supply line. They must be combined with an overload protection device (gG fuses, C type circuit-breaker, etc.) suitable for the installation configuration and located at the start of the line.

(2) The recommended AC supply cable cross-sections have been determined for single-core cable with a maximum length of 20 m. For longer cables, take line drops due to the length into account.

(3) The motor cable cross-sections are given for information only for a current corresponding to the value of the Ico current at 3 kHz in normal duty, a maximum length of 50 m, output frequency less than 100 Hz and an ambient temperature of 40°C. **The recommended motor cables are shielded multicore type**. The values supplied are typical values.
Example: Cable cross-section of 2 x [3 x 150 + PE] corresponds to 2 cables each consisting of 3 phase conductors (cross-section 150 mm²) + earth conductors (see below).

(4) The earth (PE) conductor cross-section cannot be less than half the cross-section of a live conductor, with the same material used. Example: The earth conductor cross-section for a live conductor 2x 240 mm² must be:
- 2 x 120 mm²
- 2 x (3 x 40 mm²) when the earth conductor is divided by 3 (see above figure)

(5) For Powerdrive MD Smart equipment 680TN-H / 860TN-H / 1140TN-H / 1290TN-H / 1410TN / 1710TN-H / 2280TN-H / 2850TN-H:
- The cables for each of the motor U/V/W phases must be distributed symmetrically over the U/V/W connection plates in each drive cabinet.
- In -B versions, the incoming line cables must be distributed symmetrically over the L1/L2/L3 connection plates in each drive cabinet.

3.2 - Connection of the control

• The Powerdrive MD Smart inputs have a positive logic configuration. Using a drive with a control system which has a different control logic may cause unexpedted starting of the motor.
• The Powerdrive MD Smart control circuit is isolated from the power circuits by single insulation. Its electronic 0V is connected to the connection terminal on the outer protective conductor (earth terminal). The installer must ensure that the external control circuits are isolated against any human contact.
• If the control circuits need to be connected to circuits complying with SELV safety requirements, additional insulation must be inserted to maintain the SELV classification (see EN 61140).

3.2.1 - Control terminal block location

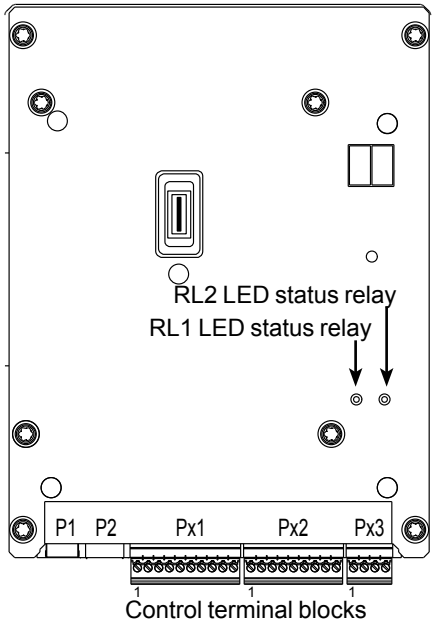

Control terminal block

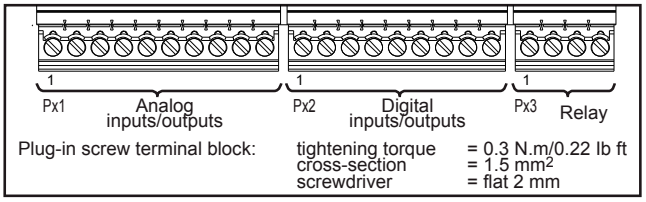

3.2.2 - Control terminal block characteristics

3.2.2.1 - PX1 terminal block characteristics

1	10V	+10 V internal analog source
Accuracy		± 2%
Maximum output current		10 mA

2	AI1+	Differential analog input 1 (+)
3	AI1-	Differential analog input 1 (-)
Factory setting		0-10V speed reference
Input type		± 10 V differential bipolar analog voltage (for common mode, connect terminal 3 to terminal 6)
Absolute maximum voltage range		± 36 V
Voltage range in common mode		± 24 V/0 V
Input impedance		> 100 kΩ
Resolution		11 bits + sign
Sampling period		2 ms
Input filter bandwidth		~ 200 Hz

4	AI2+	Differential analog input 2 (+)
5	AI2-	Differential analog input 2 (-)
Factory setting		4-20 mA speed reference
Input type		Unipolar current (0 to 20 mA, 4 to 20 mA, 20 to 0 mA, 20 to 4 mA)
Absolute maximum current		30 mA
Voltage range in common mode		± 24 V/0 V
Input impedance		100 Ω
Resolution		12 bits
Sampling period		2 ms
Input filter bandwidth		~ 200 Hz

6	0V	Analog circuit common 0 V
The 0 V on the electronics is connected to the metal ground of the drive		

7	AI3	Analog input 3
Factory setting		No assignment
Input type		± 10 V bipolar analog voltage in common mode or unipolar current (0 to 20 mA, 4 to 20 mA)
Resolution		11 bits + sign
Sampling period		2 ms
Input filter bandwidth		~ 200 Hz
Voltage range in common mode		± 24 V/0 V
Voltage mode		
Input impedance		> 50 kΩ
Absolute maximum voltage range		± 30V
Current mode		
Input impedance		100 Ω
Absolute maximum current		30 mA

8	AO1	Analog output
Factory setting		4-20 mA motor current signal
Output type		Bipolar analog voltage in common mode or unipolar current in common mode
Resolution		13 bits
Sampling period		2 ms
Voltage mode		
Voltage range		± 10V
Load resistance		1 kΩ minimum
Current mode		
Current range		0 to 20 mA, 4 to 20 mA
Load resistance		500 Ω maximum

9	DI1 PTC	Digital input 1 or PTC thermal sensor
Factory setting		No assignment
Sampling period		2 ms
Thermal sensor input		
Voltage range		± 10V
Trip threshold		> 3.3 kΩ
Reset threshold		< 1.8 kΩ
Digital input		
Type		Digital input in positive logic
Voltage range		0 to + 24 V
Absolute maximum voltage range		0 V to + 35 V
Thresholds		0 : < 5 V 1 : > 13 V

10	0V	Analog circuit common 0 V
The 0 V on the electronics is connected to the metal ground of the drive		

3.2.2.2 - PX2 terminal block characteristics

1 9	+24V ref	+24 VDC user output
+24 VDC user output		
Output current		100 mA
Accuracy		± 5%
Protection		Current limiting and setting to trip mode
External input +24Vdc		
Rated voltage		24Vdc
Minimum operating voltage		22V
Absolute maximum voltage		28V
Recommended power		50 W
Recommended fuse		2.5A
An external supply connected to the +24V terminal will maintain the control supply in the event of a mains loss.		

2	DO1	Digital output
Factory setting		Zero speed
Characteristics		Open collector
Absolute maximum voltage		+ 30 V/0 V
Overload current		150 mA

3	STO-1	Drive enable input 1 (Safe Torque Off function)
6	STO-2	Drive enable input 2 (Safe Torque Off function)
Input type		Positive logic only
Absolute maximum voltage		+ 30 V
Thresholds		0 : < 5 V 1 : > 13 V
Response time		< 20 ms

4	DI2	Digital input 2
5	DI3	Digital input 3
7	DI4	Digital input 4
8	DI5	Digital input 5
DI2 factory setting		Selection of speed reference
DI3 factory setting		
DI4 factory setting		Run FWD/Stop input
DI5 factory setting		Run reverse/Stop input
Type		Digital inputs in positive logic
Voltage range		0 to + 24 V
Absolute maximum voltage range		0 to + 35V
Thresholds		0 : < 5 V 1 : > 13 V

3.2.2.3 - PX3 terminal block characteristics

1	COM-RL1	N/O (normally open) relay output
2	RL1	
3	COM-RL2	N/O (normally open) relay output
4	RL2	
RL1 factory setting		Drive status relay
RL2 factory setting		Maximum speed alarm
Voltage		250 VAC
Maximum contact current		2 A - 250 VAC, resistive load
		1 A - 250 VAC, inductive load
		2 A - 30 VDC, resistive load

• Provide a fuse or other overcurrent protection in the relay circuit.

Note: When the RL1 or RL2 relay is activated, the corresponding status LED on the control board lights up.

3.2.3 - Factory configuration of control terminal blocks

In the event of a return to factory settings, the drive will configure its inputs as below.
Refer to the electrical plan THxxxxx (POWERDRIVE ELECTRICAL folio) to assign correct settings using the equipment remote control.

Nota : For more details on parameters, please refer to the commissioning manual ref. 5641.

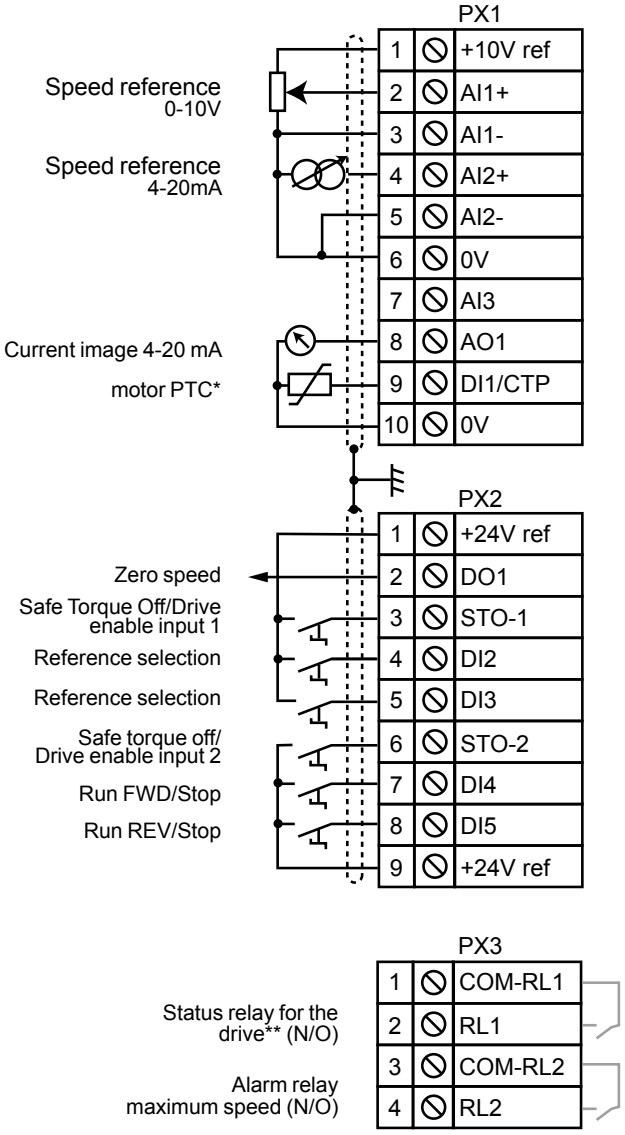

Note: This configuration has been obtained from a drive with factory settings (default parameter settings).
The STO-1 and STO-2 inputs must be closed before giving a run command.

(*) By default the motor thermal sensor is disabled. If the motor thermal sensor needs to be connected to DI1/PTC, set **Mtr.06 (05.70)** = Drive terminal (1).

(**) The relay RL1 opens if one of the 2 STO inputs opens.

• Modification of the Run/Stop control logic
- For "3-wire" control (jog Run/Stop):

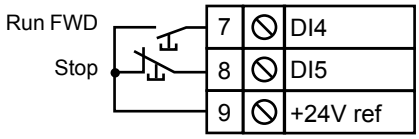

List of parameters to set:
Ctr.06 (06.04) = Run Latched (1)
I/O.10 (08.25) = **06.39** Stop (DI5 terminal)

- For Run/Stop control with change of direction:

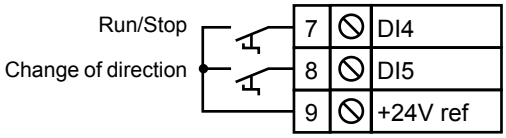

List of parameters to set:
Ctr.06 (06.04) = Run Fwd/Rev (2)
I/O.09 (08.24) = **06.34** Run/Stop (DI4 terminal)
I/O.10 (08.25) = **06.33** Fwd/Reverse (DI5 terminal)

• Selection of the reference via digital inputs:

DI2	DI3	Selection
0	0	Voltage speed reference (0-10 V) on analog input AI1+, AI1-
0	1	Current speed reference (4-20 mA) on analog input AI2+, AI2-
1	0	Preset reference 2 **Spd.05 (01.22)** to be set
1	1	

3.3 - STO-1/STO-2 inputs: Safe Torque Off function

The STO-1 and STO-2 inputs are safety inputs that can be used to disable the drive output so no torque at the motor shaft is generated.
They are independent of one another. They are created by simple hardware not connected to the microcontroller. They act on two different stages of the IGBT output bridge control.
To enable the drive, the STO-1 and STO-2 inputs must be connected to the +24V source.
The opening of a minimum of one input locks the output bridge.

These 2 inputs can be used in conjunction to create a "Safe Torque Off" function with a logic combining 2 separate channels.
In this configuration, the "Safe Torque Off" function is guaranteed with a very high level of integrity in conformity with standards:
- EN 61800-5-2
- EN/ISO 13849-1: 2006; PLe
- IEC/EN 62061: 2005; SIL3

(CETIM approval no. CET0047520)

This built-in function enables the drive to act as a contactor that switches off the motor power, allowing a deceleration in a free wheel mode.

The STO-1 and STO-2 inputs are compatible with self-tested logic outputs in controllers such as PLCs, for which the test pulse lasts for 1 ms maximum.
If the data sent by the 2 inputs are not identical, this generates a drive trip. The RL1 relay opens and the drive indicates a "t.r./63" trip on the drive 2-digit display or "STO input inconsistency" trip on the parameter-setting interface.

For correct use, the power and control connection diagrams described in the following paragraphs must be adhered to.

• The STO-1/STO-2 inputs are safety components which must be incorporated in the complete system dedicated to machine safety. As for any installation, the complete machine must be subject to a risk analysis. The integrator must determine the safety category which the installation must comply with.

• The STO-1 and STO-2 inputs, when open, lock the drive, so the dynamic braking function is no longer available. If a braking function is required before the drive secure disable lock is applied, a time-delayed safety relay must be installed to activate the locking automatically after the end of braking.
If braking needs to be a machine safety function, it must be provided by an electromechanical solution since the dynamic braking by the drive function is not considered as a secure disable function.

• The STO-1/STO-2 inputs do not provide the electrical isolation function. Prior to any work carried out on the drive / installation, the power supply must therefore be switched of through an approved isolating device (isolator, switch, etc).

• The line switch integrated as an option in the drive does not isolate the drive input busbars. During the installation and maintenance phases, make sure that the power supply line is disrupted.

3.3.1 - Single channel locking (SIL1 - PLb)

3-phase AC power supply, in accordance with safety standard IEC/EN 62061: 2005 and EN/ISO 13849-1: 2006 - Single channel locking (SIL1 - PLb).

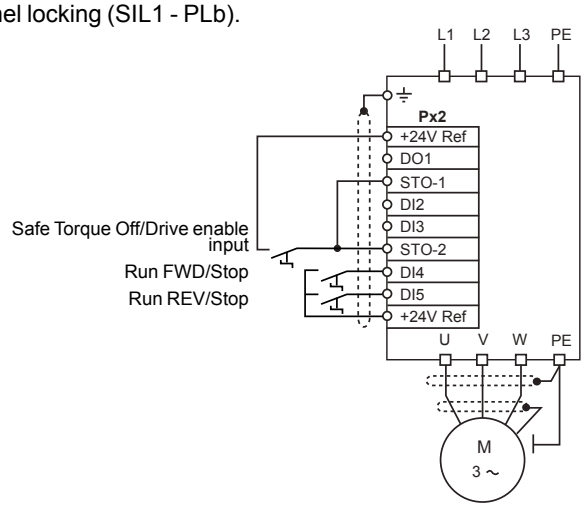

3.3.2 - Double channel locking (SIL3 - PLe)

3-phase AC power supply, in accordance with safety standard IEC/EN 62061: 2005 and EN/ISO 13849-1: 2006 - Double channel locking (SIL3 - PLe)

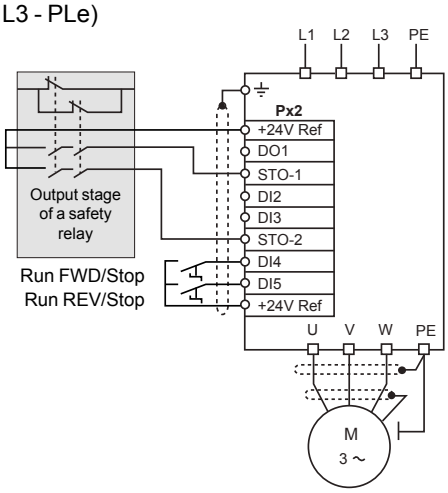

4 - GENERAL EMC - HARMONICS - MAINS INTERFERENCE

The power structure of frequency inverters leads to the occurrence of two types of phenomenom :
- Low-frequency harmonics fed back to the mains supply
- Emission of radio-frequency signals (RFI)

These are independent phenomena. They have different consequences on the electrical environment.

4.1 - Low-frequency harmonics

4.1.1 - 6 pulse variable power drive

The rectifier, at the head of the frequency inverter, generates a non-sinusoidal AC line current.

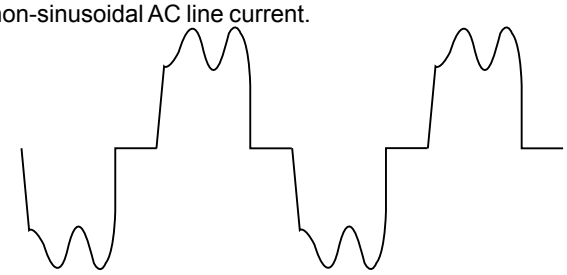

3-phase rectifier line current consumption.

This current carries harmonics with number 6n ± 1.
Their amplitudes depend on the impedance of the mains supply upstream the rectifier bridge, and on the structure of the DC bus downstream the rectifier bridge.
The more inductive the mains supply and the DC bus, the more these harmonics are reduced.
They only affect the quality of the mains supply for loads on frequency inverters of several hundred kVA, if these loads represent more than a quarter of the total load on a site.
In the above conditions:
- These harmonics have virtually no effect on the electrical energy consumption level.
- The associated temperature rises in transformers and motors directly connected to the mains supply are negligible.

It is very rare for these low-frequency harmonics to cause interference on sensitive equipment.

4.1.2 - AFE drive

The structure of the AFE type Powerdrive means that the level of mains current harmonics is limited to 5%.

4.2 - Radio-frequency interference: Immunity

4.2.1 - General

The immunity level of a device is defined by its ability to operate in an environment which is contaminated by external elements or by its electrical connections.

4.2.2 - Standards

Each device must undergo a series of standard tests (European standards) and meet a minimum requirement in order to be declared as compliant with the variable speed drive standards (EN 61800-3).

4.2.3 - Recommendations

An installation consisting exclusively of devices which comply with the standards concerning immunity is very unlikely to be subject to a risk of interference.

4.3 - Radio-frequency interference: Emission

4.3.1 - General

In order to limit motor losses and obtain a low level of motor noise, frequency inverters use high-speed switches (transistors, semi-conductors) which switch high voltages (> 550 V) at high frequencies (several kHz).
As a result, they generate radio-frequency (R.F.) signals which may disturb operation of other equipments or distort measurements taken by sensors:
- Due to high-frequency leakage currents which escape to earth via the stray capacity of the drive/motor cable and through the motor via the metal structures which support it.
- By conduction or feedback of R.F. signals on the power supply cable: conducted emissions
- By direct radiation near to the mains supply power cable or the drive/motor cable: radiated emissions.

These phenomena are of direct interest to the user.
The frequency range concerned (radio frequency) does not affect the energy distribution company.

4.3.2 - Standards

Standard EN 61800-3 defines the maximum emission levels to comply with according to the type of environment the drive is installed in. In some cases, it may be necessary to add an external RFI filter (see section 4.6, page 27).

4.4 - Mains supply

4.4.1 - General

Each industrial power supply has its own intrinsic characteristics (short-circuit capability, voltage value and fluctuation, phase imbalance, etc) and supplies equipment some of which can distort its voltage either permanently or temporarily (notches, voltage dips, overvoltage, etc). The quality of the mains supply has an impact on the performance and reliability of electronic equipments, especially variable speed drives.
The **Powerdrive MD Smart** is designed to operate with mains supplies typical of industrial sites throughout the world. However, for each installation, it is important to know the characteristics of the mains supply in order to carry out corrective measures in the event of abnormal conditions.

4.4.2 - Mains transient overvoltages

There are numerous sources of overvoltages on an electrical installation:
- Connection/disconnection of banks of power factor correction capacitors
- High-power thyristor-controlled equipment (oven, DC drive, etc)
- Results of lightning.

4.4.2.1 - Connection/disconnection of a bank of power factor correction capacitors

Connecting power factor correction capacitors in parallel on the drive power supply line when the drive is running can generate transient overvoltages that are likely to trip the drive safety devices, or even damage it in extreme cases.
If banks of power factor correction capacitors are used on the power supply line, make sure that:
- The threshold between steps is low enough to avoid causing overvoltage on the line
- The capacitors are not permanently connected.

4.4.2.2 - Presence of commutation notches on the line

When high-power thyristor-controlled equipment is connected on the same line as the drive, it is essential to ensure that the harmonics generated by the commutation notches do not excessively distort the mains voltage and do not create voltage peaks with amplitude higher than 2 x mains Vrms. If this is the case, it is essential to take corrective measures by inserting a choke in the line supplying the thyristor-controlled equipment or by moving the drive power supply line to another source.

4.4.3 - Unbalanced power supply

Similar to what is observed on an electric motor, the line current imbalance of a drive operating on an unbalanced mains supply may be several times the value of the voltage imbalance measured on the power supply. A highly unbalanced mains supply (>2%) associated with a low mains impedance may result in a high level of stress on the components at the input stage of a drive.

Neutral IT point connection

For IT power supplies, open the commoning link connecting the EMC capacitors to earth as indicated below. This does not concern AFEs (Active Front Ends).

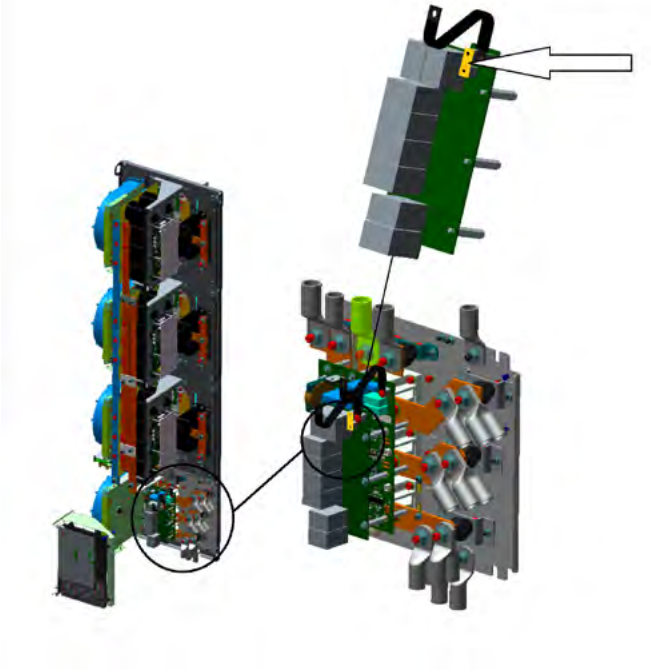

4.4.4 - Ground connections

The equipotential earth bonding of some industrial sites is not always observed. This lack of equipotentiality leads to leakage currents which flow via the earth cables (green/yellow), the machine chassis, the pipework, etc, and also via the electrical equipment. In some extreme cases, these currents can trip the drive.
It is essential that the earth network is designed and implemented by the installation supervisor so that its impedance is as low as possible, so as to distribute the fault currents and high-frequency currents without them passing through electronic equipment.
Metal grounds must be mechanically connected to each other with the largest possible electrical contact area. Under no circumstances can the earth connections designed to protect people, by linking metal grounds to earth via a cable, serve as a substitute for the ground connections (see IEC 61000-5-2).
The immunity and radio-frequency emission level are directly linked to the quality of the ground connections.

4.5 - Basic precautions for installation

These should be taken into account when wiring the **Powerdrive MD Smart** and the external components. In each paragraph, they are listed in decreasing order of effect on correct operation of the installation.

4.5.1 - Wiring inside the cabinet

- Separate as far as possible control cables and power cables (Do not run them in the same cable ducts).
- For control cables, use shielded twisted cables and connect the shield to the drive grounding bracket.

Shielding bracket

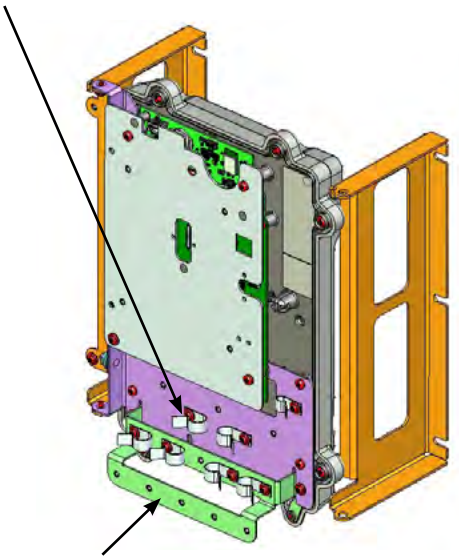

Shielding bracket for optional modules

4.5.2 - Wiring outside the cabinet

4.5.2.1 - Control wiring

If the control cable needs to run outside the cabinet, use a shielded cable and connect the shield to the grounding bracket.

4.5.2.2 - Power wiring

- **Connect the motor earth terminal directly to that of the drive.**

Never use shielded single-core cables.

Use shielded 3-core cables with symmetrical conductors for protective earthing as indicated below.

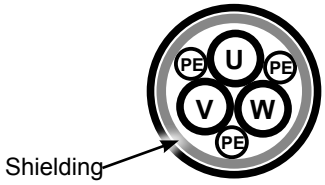

A separate PE protective conductor is mandatory if the conductivity of the cable shielding is less than 50% of the conductivity of the phase conductor.
- The shielding must be connected at both ends: drive end and motor end (connected round the whole circumference).
- In the second industrial environment, the shielded motor power supply cable can be replaced by a 3-core + earth cable placed in a fully enclosed metal conduit (metal cable duct for example). This metal conduit must be mechanically connected to the electrical cabinet and the structure supporting the motor.

If the conduit consists of several pieces, these should be interconnected by braids to ensure earth continuity. The cables must be positioned and held in a cloverleaf formation in the conduit.

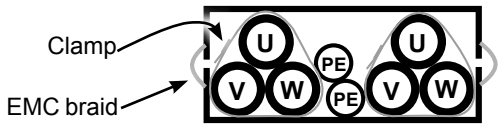

- There is no need to shield the power supply cables between the mains supply and the drive.
- Isolate the power cables from the control cables. The power cables must intersect the other cables at an angle of 90°.
- Isolate sensitive elements (probes, sensors, etc) from metal structures which may be shared by the motor support.
- The motor cables and network power cables should not be routed side by side in the same channel to reduce proximity couplings.

4.6 - Electromagnetic compatibility (EMC)

CAUTION:
Conformity of the drive is only assured when the mechanical and electrical installation instructions described in this manual are adhered to.

Immunity			
Standard	**Description**	**Application**	**Conformity**
IEC 61000-4-2	Electrostatic discharges	Product casing	Level 3 (industrial)
EN 61000-4-2			
IEC 61000-4-3	Immunity standards for radiated radio-frequency	Product casing	Level 3 (industrial)
EN 61000-4-3			
IEC 61000-4-4	Bursts of fast transients	Control cable	Level 4 (industrially hardened)
EN 61000-4-4		Power cable	Level 3 (industrial)
IEC 61000-4-5	Shock waves	Power cables	Level 4
EN 61000-4-5			
IEC 61000-4-6	Generic immunity standards for conducted radio-frequency	Control and power cables	Level 3 (industrial)
EN 61000-4-6			
EN 50082-2	Generic immunity standards for the industrial environment	-	Conforming
IEC 61000-6-2			
EN 61000-6-2			
EN 61800-3	Variable speed drive standards	Conforming to the first and second environment	
IEC 61800-3			
EN 61000-3			

Emission				
Standard	**Description**	**Catégory**	**Conformity conditions**	
			Standard	**With optional RFI filter**
EN 61800-3	Variable speed drive standards	C1	-	-
		C2	-	Conforming - Cable length < 10 m - Switching frequency < 4 kHz
		C3	Conforming - Cable length < 100m - Switching frequency < 4 kHz	Conforming - Cable length < 100 m - Switching frequency < 6 KHz

5 - PARAMETER-SETTING INTERFACE AND OPTIONS

Connection to the drive

An **AFE** type drive includes two control modules:

- One module for the active rectifier.
- One module for the motor inverter.

The parameter-setting interface is connected to the motor inverter module, but may be connected to the active rectifier module for its initial configuration.

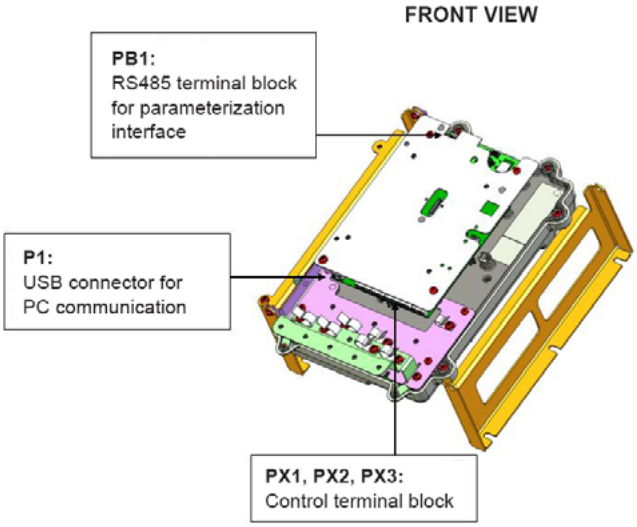

◦ **P1 connector**

The USB-B connector on the door of the **Powerdrive MD Smart is connected to P1** (P1 therefore cannot be used directly). This connector is used to communicate via PC using the Systemiz software.

In conformity with standard EN 60950, the USB link can only be used via a device that provides isolation of 4 kV (MDX-USB isolator option).

◦ **PB1 terminal block**

This is a standard RS485/RS422 terminal block which is used to connect a parameter-setting interface.

5.1 - Drive parameter-setting

5.1.1 - MD3KEYPAD

The MD3KEYPAD display provides user-friendly setup of the Powerdrive MD Smart and access to all parameters.

5.1.1.1 - Presentation

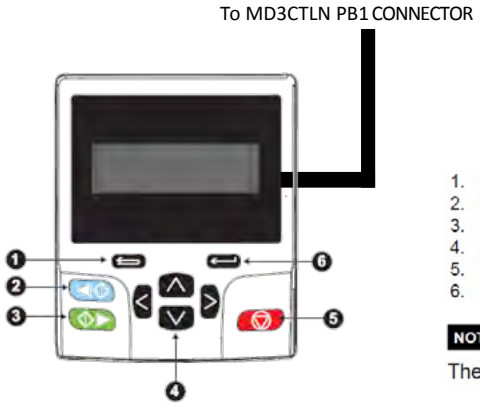

1. Escape button
2. Start reverse (Auxiliary button)
3. Start forward button
4. Navigation keys (x4)
5. Stop / Reset (red) button
6. Enter button

NOTE

The red button is also used to reset the drive.

5.1.1.2 - Interface architecture

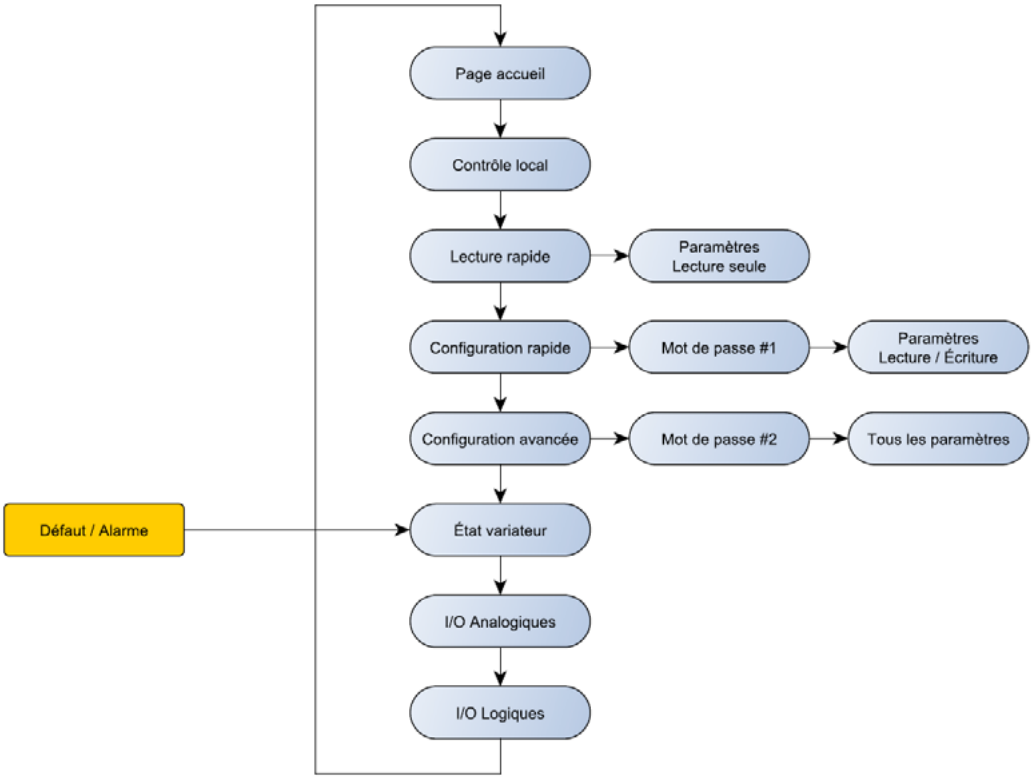

• Homepage

After the loading phase following power-up of the drive, the parameter setting interface displays the following screen:

- Ready state

- Locked state

- In operation

• Local control

Gives direct access to the motor control via the display (Start/Stop, direction of rotation, speed reference). This screen can be configured by the user via the menu Parameter-setting/Console configuration. The console control is disabled in the factory setting.

- Displayed only if «Command by console»

- If reference by console

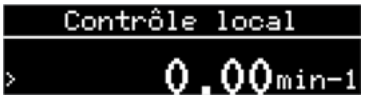

- It other reference (AI, RP)

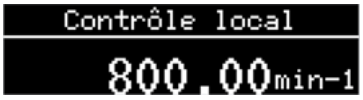

- **Reading menu**

Allows the status of the drive and its main measurement points to be displayed, both at standstill and during operation.

- Quick access to some read-only parameters

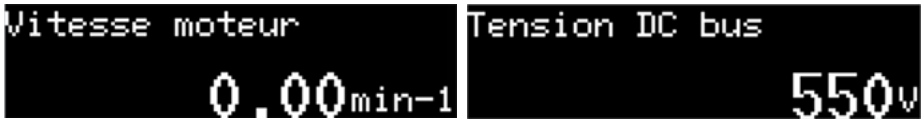

- **Writing menu**

- Quick access to some parameters in read-write mode
- Protection by password

- **Drive status page**

- Drive status (fault or alarm)

- Analog I/O status

- Logical I/O status

5.1.2 - IHM Systemiz

The new generation of high power drives is equipped with a secure wireless connection. They are connected and smarter thanks to the Systemiz application, jointly developed to offer a multitude of services and enrich the user experience. The interactivity of the package provides greater responsiveness, remote or on-site self-diagnosis capability, and easier integration into your systems.

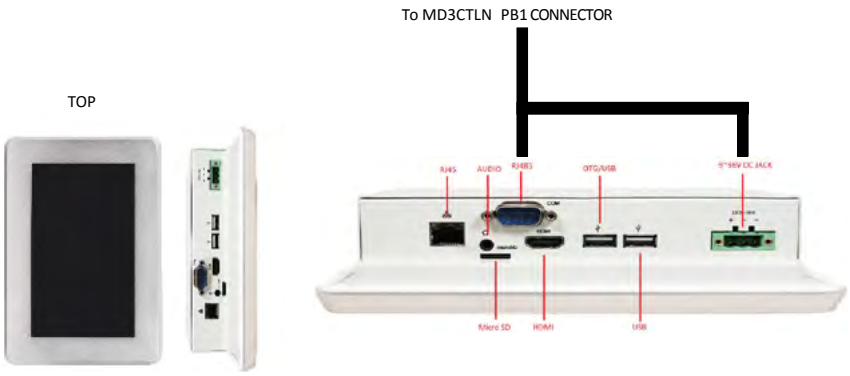

5.1.2.1 - Presentation

The Powerdrive MD Smart parameter-setting interface is a 7'' Android touch screen user interface, located on the front panel of the drive.
To set, commission and monitor the drive, the Powerdrive MD Smart interface of Systemiz application is located to the IHM interface in factory.
The Powerdrive MD Smart interface allows:
- automatic motor parameter loading (electrical characteristics and options) in the dedicated drive menu by scanning the motor QR code with a smartphone,
- interactive and intuitive set up using the start-up wizard,
- full configuration of the operator interface,
- innovative diagnostic tools.

For more interactivity, use complete Systemiz apps, available on iOS, Android or Windows PC platforms(some versions of Android or iOS may not be compatible with the apps).

SCAN ME

It provides 3 features:
- Product library: direct access and download any information available on Nidec Leroy-Somer products,
- Motor data: electrical data and motor options filled in automatically by QR code or set-up wizard adapted to motor technology,
- Powerdrive MD Smart interface: same functionalities as described above, but from a laptop through USB port connection or smartphone/pad through Bluetooth connection.

Interface Homepage and icon description

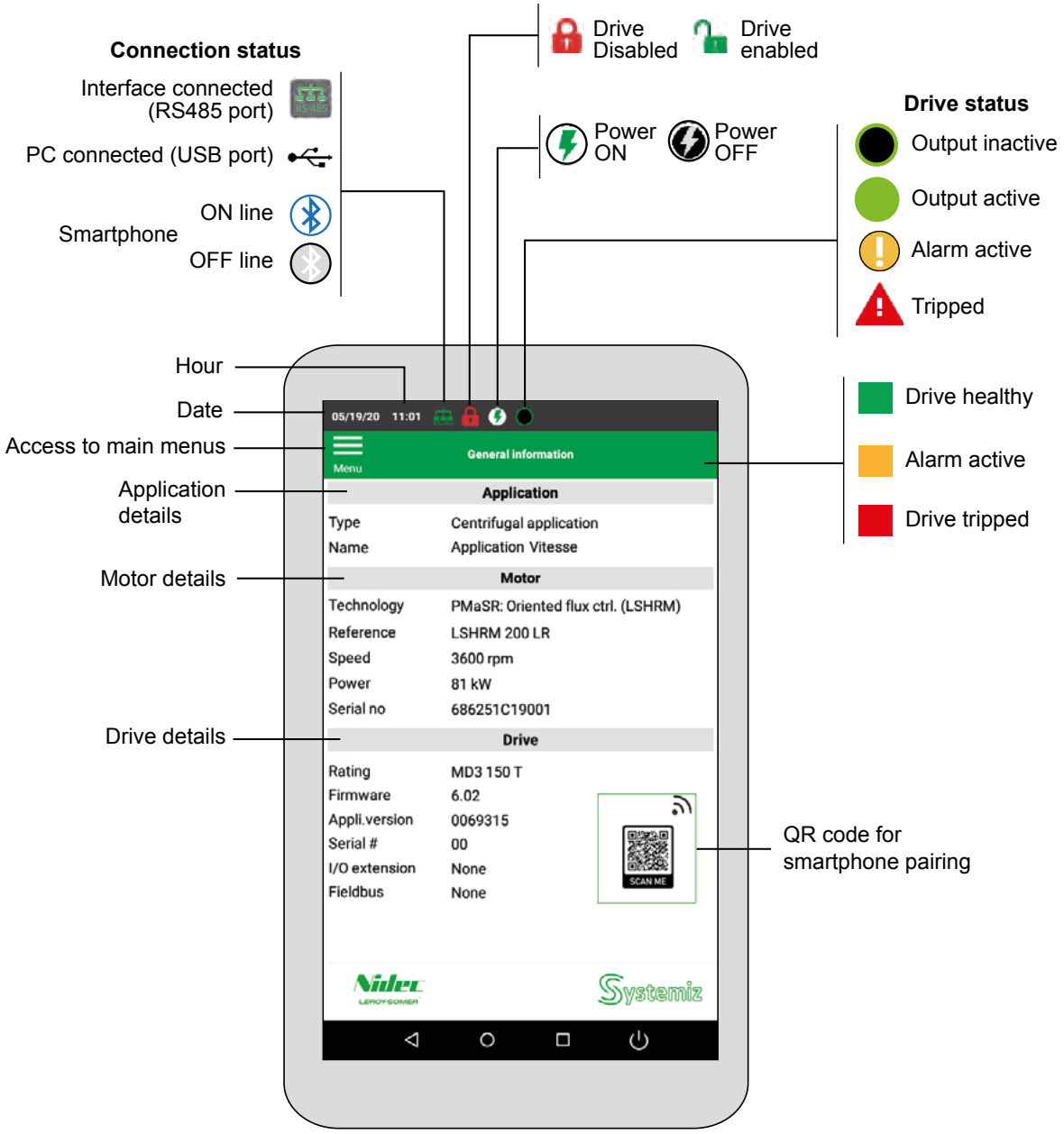

5.1.3 - Interface architecture

To access the interface main menu page, press the Menu icon in the upper-left corner. Seven menus allow the user to commission and supervise the drive, as described below.

- **General informations**: gives application type and name (if previously set), motor details (if previously set) and drive details.

- **Data display**: Only available if drive output is active. Fully configurable, allows to display several read values, shown as curve, bargraph or indicator. By default, gives operator display (motor speed curve, current magnitude bargraph, output power indicator) and main control board I/O status. Additional information can be displayed depending on options fitted or connected to the drive.

- **Quick application tuning**: menu fully configurable by the user who can choose up to 20 parameters to be displayed. Once the drive is commissionned, the operator can access to this menu to easily read or set main application parameters without having to search through all interface menus. If initial start-tup wizard of the drive is used, some parameters can be automatically stored in this menu, but they still can be changed by the user if needed.

- **System settings**: provides an access to an easy set-up function (a wizard for initial start-up of the drive and easy setup menus for quick setting after first start-up), advanced menus for experienced users or specific settings, and password management.

- **Parameter file management**: allows the user to create several configuration files and to compare them to current settings, to default settings or to each other.

- **Data monitoring**: allows the user to customize the display or the parameters and to manage alarms, trips or triggers.

- **Event history**: lists the operating history, trip record and setting changes.

NOTE

If a menu is locked with a password, the user will see the locker logo on the left as described below.

: Locker logo which highlights a password protection.
One locker for Level 1 protected,
Two lockers for Level 2 protected.

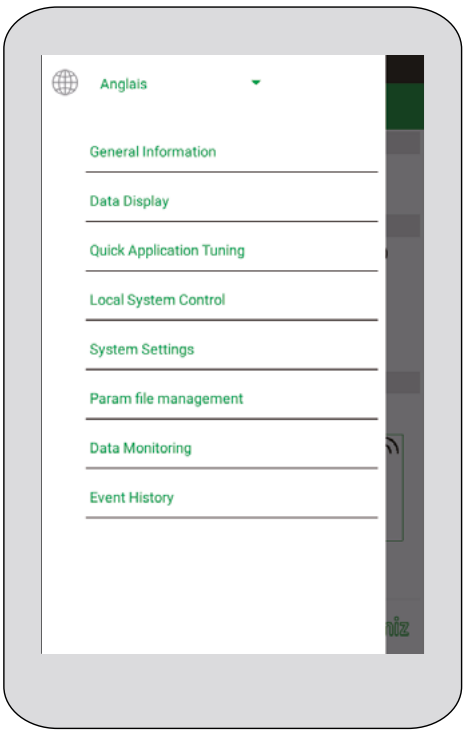

5.1.4 - Special settings

Refer to commissioning manual (ref. 5641) for further information on settings parameters for the Powerdrive MD Smart.

- **Clogged filter alarm**

The **Powerdrive MD Smart** has an "over temperature" alarm (# 10.18) which warns the user when the internal temperature of the product reaches 60°C or when a power module overheats.
To set a different alarm treshold, you can use the following settings:
Using comparator 3:

#12.63 = 7.55 (source = control board temperature)
#12.64 = 60 (threshold = 60°C)
#12.65 = 2°C (hysteresis)
#12.65 = 0

To display information on the HMI of the drive:

#12.67 = 10.54 (User Alarm 1)

To adress information to a digital output (eg. DO1)

 # 8.26 = 12.61 (DO1 assigned to comparator 3)

Reminder: **Powerdrive MD Smart** filters are washable and must be kept clean.

5.2 - Add-on options

The control board of the **Powerdrive MD Smart** is designed to be plugged with various optional modules. Several options can be combined:

- Fieldbus option (see §5.2.1)
- Speed feedback (see §5.2.2)
- Additional I/O (see §5.2.3)

5.2.1 - Fieldbus options

Depending on the configuration of the speed feedback and inputs/outputs optional modules, two types of fieldbus are proposed:

MDX option: option to be fitted to the control board

CM module: compact module to be integrated in an existing MDX board

Association table :

Main option	Filedbus	
	MDX version	CM version
None	X	
MDX-ENCODER		X
MDX-RESOLVER		X
MDX-I/O Lite		X
MDX I/O M2M	X	
MDX-ENCODER + MDX I/O M2M		X
MDX-RESOLVER + MDX I/O M2M		X

Fieldbus modules can be used to communicate with the corresponding networks respective. They can be integrated in and are supplied by the drive.

The following fieldbus are available on Powerdrive MD Smart:

- **MDX/CM-MODBUS** : Modbus RTU (RS485/232)
- **MDX/CM-ETHERNET** : Modbus TCP (Ethernet)
- **MDX/CM-ETHERNET-IP** : EtherNet/IP
- **MDX/CM-PROFIBUS** : Profibus DP V1
- **MDX/CM-PROFINET** : ProfiNet

For more details, consult the specific documentations.

5.2.2 - Speed feedback options

Two options are available to manage the motor speed feedback.

- **MDX-ENCODER:** The MDX-ENCODER option is used to It manages incremental encoders with or without commuation channels (up to 500kHz).
- **MDX-RESOLVER:** The MDX-RESOLVER option is used to manage 2 to 8 poles resolvers.

For more details, consult the specific documentations.

5.2.3 - Additionnal I/O options

Two options are available to increase the number of inputs/outputs for the **Powerdrive MD Smart:**

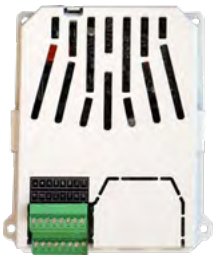

MDX-I/O LITE

MDX-I/O M2M

Fonctions	MDX-I/O Lite	MDX-I/O M2M
Analog input (V, mA)	-	1
Differential analog input (V, mA)	1	1
Analog ouputs (V, mA)	2	1
Motor thermistor KTY84-130 or PT100	1	1
Digital inputs	2	4
Digital outputs	1	2
Assignable relay	1	2
Drive forced fan's management	✓	✓
Real time clock	-	✓
Ethernet connection : • WEB pages: drive configuration and status • 2 Programmable emails • Configuration backup & restoration	-	✓
Datalogger	-	✓

For more details, consult the specific documentations.

5.3 - Braking modules and associated resistors

Braking phases occur when energy is sent back from the motor to the drive. Without an additional device, the maximum power that can be absorbed by a **Powerdrive MD Smart** is limited to its internal losses. If the application calls for significant braking power (inertia slowdown with short deceleration times, fast braking, etc.) a device must be added to the standard product consisting of an add-on braking module and an external resistor.
Several MD2TF braking modules can be combined to increase the braking capacity. They must not be mounted in parallel on a single resistor: use as many resistors as there are braking modules.

5.3.1 - Braking modules

Braking transistors are only mounted in the factory.

Leroy-Somer offers MD2TF units on their own or combined with a thermal relay. This must be set to the stated current for the resistor associated with it. See table below.

5.3.2 - Braking resistors

• Before installing a braking resistor, make sure that its presence does not constitute a fire hazard.
• A braking resistor must be mounted outside the drive cabinet, as close as possible. Ensure that it is incorporated in a grounded ventilated metal case, to avoid any direct contact.
• The braking resistor must be wired in series with a thermal relay calibrated to the resistor rms current. When the relay trips, the drive must immediately stop and be disconnected from the AC supply.
• Specific information warning of the presence of high temperature must be affixed to the resistor.
• The braking resistor must be installed so that it does not damage neighboring components with its heat dissipation.

- **Dimensions**

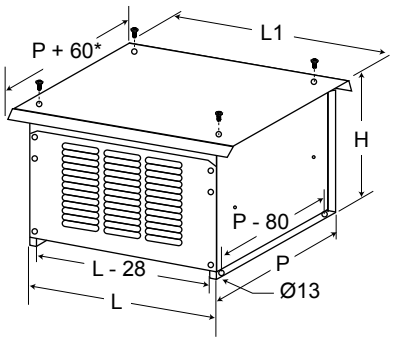

* becomes D + 80 from RF-MD-37500-5 upwards

Protection: IP13

- **Braking resistor characteristics:**

Type	Electrical characteristics							Dimensions (mm)				Weight (kg)
	Ohmic value (Ω)	Thermal power (kW)	Rating	Braking transistor kit	Thermal relay	Peak power (kW)	rms current (A)	L	L1	D	H	
RF-MD-27500-10	10	27.5	T	MD2TF400-27500	48 to 65A	51	52	860	890	480	690	66
RF-MD-37500-5	5	37.5	T	MD2TF400-37500	80 to 104A	100	87	960	1140	380	1150	77
RF-MD-55000-5	5	55	T	MD2TF400-55000	95 to 125A	100	105	960	1140	540	1150	105
RF-MD-75000-4	3.5	75	T	MD2TF400-75000	120 to 160A	145	146	1080	1260	680	1150	145
			TH	MD2THF330-75000	120 to 160A	345	146					
RF-MD-110000-3	2.35	110	T	MD2TF400-110000	160 to 220A	220	216	960	1140	740	1520	200

6 - TRIPS - DIAGNOSTICS

6.1 - Safety notice

The user must not attempt to repair the drive himself, nor perform diagnostics other than those listed in this section. If the drive malfunctions, please contact your local technical support.

6.2 - Alarms

Alarms may appear during drive operation.
These alarms are for information only, in order to warn the user: the drive continues to operate but may trigger a safetrip if no corrective action is taken.
The HMI displays a page “active trips” where “ALARM” appears at the top of the screen. All the trips indicated on the keypad or parameter-setting interface are listed in the table below. On the drive control board, 2 LED displays indicate alternately “A.L.” and a number that can be used to identify the alarm by means of the table below (this number corresponds to the value of parameter **10.97**).

Code	No.	Meaning
A.L.	1 to 4	User alarm 1 (**10.54**) to User alarm 4 (**10.57**)
	6	Motor overload (**10.17**)
	7	Drive overtemperature (**10.18**)
	8	Microcontroller overoccupancy
	9	Rectifier
	10	Emergency operation (see menu 20)

6.3 - Tripping on a safetrip

If the drive trips, the drive output bridge is inactive, and the drive no longer controls the motor.
When a trip is active, the LEDs present on the control board display alternately “t.r.” and a number that can be used to identify the active trip (see left-hand column in the table below). For trips numbered higher than 100, only the last 2 digits are displayed with a point displayed on both LEDs to indicate the hundred.
Example:

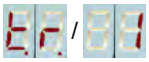 : indicates trip no. 1

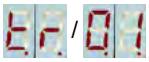 : indicates trip no. 101

After consulting the table, follow the procedure below:
- Make sure that the drive is disabled (STO-1 and STO-2 terminals open)
- Isolate the drive power supply
- Carry out the necessary checks in order to eliminate the reason for the trip
- Activate the STO-1 and STO-2 inputs to clear the trip

The HMI displays an active trip page, where “TRIP” appears at the top of the screen.
All the trips indicated on the keypad or parameter-setting interface are listed in the table below.

Opening and then closing the STO-1/STO-2 drive enable terminals and clear the trip. If the Run FWD or Run reverse terminal is closed at that time, the motor may or may not start immediately, depending on the setting of Ctr.06 (06.04).

No.	Parameter-setting interface name	Reason for trip	Solution
1	**DC UnderVolt**	DC bus undervoltage	• Check the input fuses. • Check the quality of the power supply (voltage dips).
2	**DC over volt**	DC bus overvoltage	• Check that the mains voltage is within the permitted tolerance. • Check the quality of the power supply (commutation notches or transient overvoltages). • Check the motor insulation. • Check that the deceleration mode (**02.04**) is compatible with the application. • If an MD2-TF option is used, check its size, its wiring and the state of the thermal relay.

No.	Parameter-setting interface name	Reason for trip	Solution
3	**Over current**	Over current	• Check the motor insulation. • Check the motor cables (connections and insulation). • Check the quality of the mains supply. • Run power diagnostics.
		This trip cannot be reset for a period of 10 seconds.	
4	**Brak. IGBT**	Braking IGBT transistor overcurrent	• Check the braking resistor wiring and insulation level. • Make sure that the resistor ohmic value is compatible with the MD-TF option used.
		This trip cannot be reset for a period of 10 seconds.	
5	**I Imbalanced**	Motor current imbalance: vector sum of the 3 motor currents is not zero	• Check the motor insulation. • Check the cable insulation.
6	**Out Ph. loss of a motor phase**	Loss of a motor phase	Check the motor cable and resistance values between motor phases.
7	**Overspeed**	The speed is greater than (1.3 x **01.06**) or than (**01.06** + 1000 min^{-1})	• Check the drive settings. • When the flying restart function is not being used, check that **06.09** is at "Disabled".
8	**Drive overload Ixt**	The drive overload level exceeds the conditions defined in section 1.4.2 of the installation manual	• Check the drive is suitable for the motor current cycle. • Check the ambient temperature.
9	**IGBT U**	Internal protection of phase U IGBTs	• Check the motor and cable insulation. • Run power diagnostics.
10	**Th rectifier**	Rectifier heatsink temperature too high	• Clean the cabinet dust filters. • Check the drive external and internal fans are working correctly. • Check that the product air inlet temperature is not outside the limits.
11	**Encoder rot**	The measured position does not vary (only if a feedback speed option is present)	• Check the encoder wiring. • Check that the motor shaft turns.
13	**UVW invert**	The encoder U, V, W signals are reversed (only if a feedback speed option is present)	Check the conformity of the encoder wiring.
14	**Tune U Encod**	During the autotune phase, one of the encoder U, V or W commutation channels is not present	• Check the encoder wiring. • Check the encoder connections. • Change the encoder.
15	**Tune V Encod**		
16	**Tune W Encod**		
18	**Autotune**	A stop command has been given during the autotune phase.	Repeat the autotune procedure (see **05.12**)
19	**Brak. resist.**	Parameter **10.39** "Braking energy overload accumulator" has reached 100%	• Check the settings of **10.30** and **10.31.** • Check the resistor is compatible with the application requirements.
21	**IGBT U overheating**	Overheating of phase U IGBTs	• Clean the cabinet dust filters. • Check the drive ventilation units are working correctly. • Check that the product air inlet temperature is not outside the limits. • If the trip appears at frequencies lower than 10 Hz, check that the current levels depending on the frequency are complied with. • Check that the switching frequency **05.18** is compatible with the motor current level.

No.	Parameter-setting interface name	Reason for trip	Solution
24	**Motor PTC**	Opening of the PTC input of the PX1 terminal block or T1 and T2 inputs of the MDX-ENCODER option	• Check the ambient temperature around the motor. • Check that the motor current is less than the stated current. • Check the thermal sensor wiring.
26	**Overload + 24V**	Overload on the +24 V power supply or digital outputs	Check the I/O wiring.
28	**AI2 loss**	Loss of the current reference on analog input AI2	Check the input wiring and source.
29	**AI3 loss**	Loss of the current reference on analog input AI3	
30	**COM loss**	Loss of communication on the P2 connector serial link	• Check the cable connections. • Check that parameter **11.63** is compatible with the timing of requests from the master.
31	**EEPROM**	Number of write cycles to EEPROM exceeded (>1,000,000)	• Change the control board. • Check the recurrence of write cycles from the drive controller.
33	**Stator resistance**	Trip during measurement of the stator resistance	Check the motor wiring.
34	**Fieldbus loss**	Disconnection of the fieldbus during operation or timing error	• Check the fieldbus connections. • Check that parameter **15.07** is compatible with the timing of requests from the master.
35	**STO inputs**	Simultaneous opening of both STO (Safe Torque Off) inputs during operation	Check the remote control link.
37	**Encoder break**	One of the encoder feedback data items is missing	• Check the encoder wiring. • Check the encoder connections.
38	**Breakdown**	Breakdown of synchronous motor in sensorless closed loop mode	Check the menu **5** parameters are compatible with the values on the motor nameplate
39		Not used	
41	**User 1**	User trip 1 triggered by **10.61**.	• See **10.61**.
42	**User 2**	User trip 2 triggered by **10.63**.	• See **10.63**.
43	**User 3**	User trip 3 triggered by **10.65**.	• See **10.65**.
44	**User 4**	User trip 4 triggered by **10.67**.	• See **10.67**.
45	**User 5**	User trip 5 triggered by the serial link **10.38** = 45	• See **10.38**.
46	**User 6**	User trip 6 triggered by the serial link **10.38** = 46	
47	**User 7**	User trip 7 triggered by the serial link **10.38** = 47	
48	**User 8**	User trip 8 triggered by the serial link **10.38** = 48	
49	**User 9**	User trip 9 triggered by the serial link **10.38** = 49	
50	**User 10**	User trip 10 triggered by the serial link **10.38** = 50	

No.	Parameter-setting interface name	Reason for trip	Solution
51	**DO2 MDX-I/O over Id**	The DO2 output load current (MDX-I/O option) is >200 mA	Check that DO2 is not short-circuited.
52	**DO3 MDX-I/O over Id**	The DO3 output load current (MDX-I/O option) is >200 mA	Check that DO3 is not short-circuited.
53	**MDX-I/O link**	Communication problem between the drive and the MDX-I/O option	Check the MDX-I/O option mounting.
54		Not used	
55	**Unstable DC bus**	The drive DC bus oscillates significantly	• Check the balancing of the mains phases. • Check that all 3 mains phases are present.
56	**IGBT V**	Internal protection of phase V IGBTs	• Check the motor and cable insulation. • Run power diagnostics.
57	**IGBT W**	Internal protection of phase W IGBTs	
58	**IGBT V overheating**	Overheating of phase V IGBTs	• Clean the cabinet dust filters. • Check the drive ventilation units are working correctly. • Check that the product air inlet temperature is not outside the limits. • If the trip appears at frequencies lower than 10 Hz, check that the current levels depending on the frequency have been complied with. • Check that the switching frequency **05.18** is compatible with the motor current level.
59	**IGBT W overheating**	Overheating of phase W IGBTs	
60	**Diagnostic**	Problem detected during the control and interface boards test, the power test or during the self-test	• Check that the STO1 and STO2 inputs are closed. • See diagnostic error table.
63	**STO input inconsistency**	The STO1 and STO2 inputs have had a different state for more than 100 ms	Check the remote control link for the STO1 and STO2 inputs.
65	**10V over Id**	Overload on the +10 V power supply	Check the I/O wiring
66	**DO1 over Id**	The DO1 output load current is >200 mA	Check that DO1 is not short-circuited.
67		Not used	
68	**Motor overcurrent**	The current has exceeded the limit programmed in **05.55**. The load is too high for the setting.	Check that **05.55** is consistent with the application.
69	**24 V MDX-I/O over Id**	The 24 V load current is too high	Check the MDX-I/O option I/O wiring.
70	**4 mA loss on MDX-IO AI4**	Loss of the current reference on analog input AI4 of the MDX-I/O option	Check the input wiring and source of the MDX-I/O option.
71	**4 mA loss on MDX-IO AI5**	Loss of the current reference on analog input AI5 of the MDX-I/O option	
101	**AC mains loss**	Loss of AC supply	• Check the input fuses • Check the quality of the power supply (voltage dips)
102		Not used	

7 - MAINTENANCE

• All work relating to installation, commissioning and maintenance must be carried out by experienced, qualified personnel.
• When a trip detected by the drive causes the motor to stop, fatal residual voltages remain on the terminals and in the drive.
• The drive stop function does not protect against high voltages on the terminal blocks.
• Before carrying out any work on the drive or the motor, disconnect and padlock the isolating switch in the switchboard.
• The line switch integrated as an option in the drive does not isolate the drive input busbars. During the installation and maintenance phases, make sure that the power supply line is disrupted.
• When the drive controls a permanent magnet motor, the isolating switch between the drive and the motor must be open to avoid the risk of motor voltage feedback. If there is no isolating switch, make sure the machine shaft is jammed to prevent it turning while work is carried out.
• After the drive is switched off, the external control circuits can still be active and presents dangerous voltage. Check that these circuits are powered down before working on the control cables.
• Ensure that the DC bus voltage is below 40V before carrying out any work (the control board power-on indicator LED must be off).
• After the drive has been operated, keep away from the heatsink as it may be very hot (70°C).
• After working on the motor, check that the phase order is correct when re-connecting the motor cables.
• All protective covers must remain in place during tests.
• Before performing high voltage tests or voltage withstand tests on the motor, switch off the drive and disconnect the motor.

There are very few maintenance and repair operations to be performed by the user on **Powerdrive MD Smart** drives. Regular servicing operations are described below.

- **Servicing**

Printed circuits and drive components do not normally require any maintenance. Contact your vendor or the nearest approved repair company in the event of a problem.

CAUTION:
Do not dismantle the printed circuits while the drive is still under warranty, as this immediately makes the warranty null and void.
Do not touch the integrated circuits or the microprocessor with your fingers (ESD risk).
From time to time, with the drive powered down, check that the power connections are correctly tightened. The door filters must be checked and changed regularly depending on their state.

- **Preventive maintenance**

Device	Action	Frequency
Door filters (10µm)	Clean (1)	3 months
	Replace	2 years
Power connections	Check tightness	1 year
Internal ventilation and in cabinet roof	Replace	5 years
Surge suppressor board	Replace	5 years

(1) Door filters are washable.

7.1 - Storage

The **Powerdrive MD Smart** incorporates aluminium electrolytic capacitors.
If the drive has been stored for more than 12 months, it must therefore be switched on for 5 hrs at the rated operating voltage, and this operation must be repeated every 6 months.
If the drive has been stored for more than 36 months, the capacitors must be reformed.
This consists of gradually applying a DC voltage to the banks of capacitors, until voltage values close to the rated voltages are achieved, while ensuring that the dissipated power does not exceed the maximum values authorised by the manufacturer.
An instruction sheet is available - please contact your local technical support.

7.2 - Replacing products

CAUTION:
Products must be returned in their original packaging or in similar packaging, to prevent them being damaged. Otherwise, replacement under warranty could be refused.

7.3 - List of spare parts

The list of parts can be found at the end of the TH electrical plan in the "Parts List" section.

Nidec

All for dreams

4004175 2

LEROY-SOMER™

Moteurs Leroy-Somer
Headquarter: Boulevard Marcellin Leroy - CS 10015
16915 ANGOULÊME Cedex 9

Limited company with capital of 38,679,664 €
RCS Angoulême 338 567 258

www.leroy-somer.com