ELECTRICAL CONNECTION DIAGRAMS KAMAG 11, KAMAG 14 AND KAMAG 18 GENERATORS WITH VR VOLTAGE REGULATORS

NOTE 1 CAUTION: UNIT MUST BE GROUNDED IN ACCORDANCE WITH APPLICABLE ELECTRICAL CODES: GENERATOR NEUTRAL IS FACTORY GROUNDED TO GENERATOR FRAME

NOTE 2 SEE VOLTAGE RANGE CHART FOR APPLICABLE CONNECTION DIAGRAM. CONDUCTORS SHOWN AS DASHED LINES TO BE INSTALLED BY THE USER OF THE GENERATOR. CHECK ALL CONNECTIONS INCLUDING THOSE MADE TO VOLTAGE REGULATOR BEFORE OPERATING GENERATOR SET.

NOTE 3 CONNECTION OF OPTIONAL REGULATOR ON-OFF SWITCH IS SHOWN IN FIGURE 1A.

NOTE 4 CONNECTION OF OPTIONAL FIELD CIRCUIT BREAKER IS SHOWN IN FIGURE 1B.

NOTE 5 CUT HZ JUMPER FOR 60 HZ OPERATION LEAVE JUMPER INTACT FOR 50 HZ.

NOTE 6 WHEN OPERATING ON A 3 WIRE GROUNDED LEG DELTA SYSTEM, REMOVE LEADS 4 & 7 FROM GROUND STUD, BOLT THEM TOGETHER AND INSULATE THEM. THEN CONNECT THE DESIRED PHASE LEADS TO GROUND STUD.

NOTE 7 CAUTION: EXCITER FIELD CIRCUIT IS NOT ISOLATED. DO NOT ATTEMPT TO MANUALLY FLASH GENERATOR FIELD WHILE GENERATOR IS ROTATING.

NOTE 8 LEAD MARKINGS SHOWN GIVES A-B-C PHASE ROTATION WHEN THE GENERATOR IS ROTATING CCW, AS VIEWED FROM THE EXCITER END. (CW FACING DRIVE END).

FIG 1

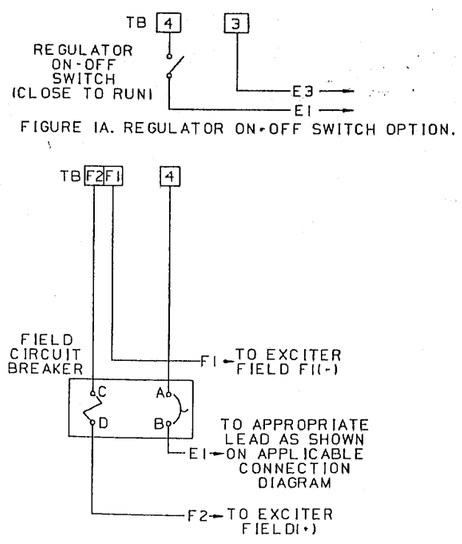

FIGURE 1A. REGULATOR ON-OFF SWITCH OPTION.

FIGURE 1B. FIELD CIRCUIT BREAKER OPTION.

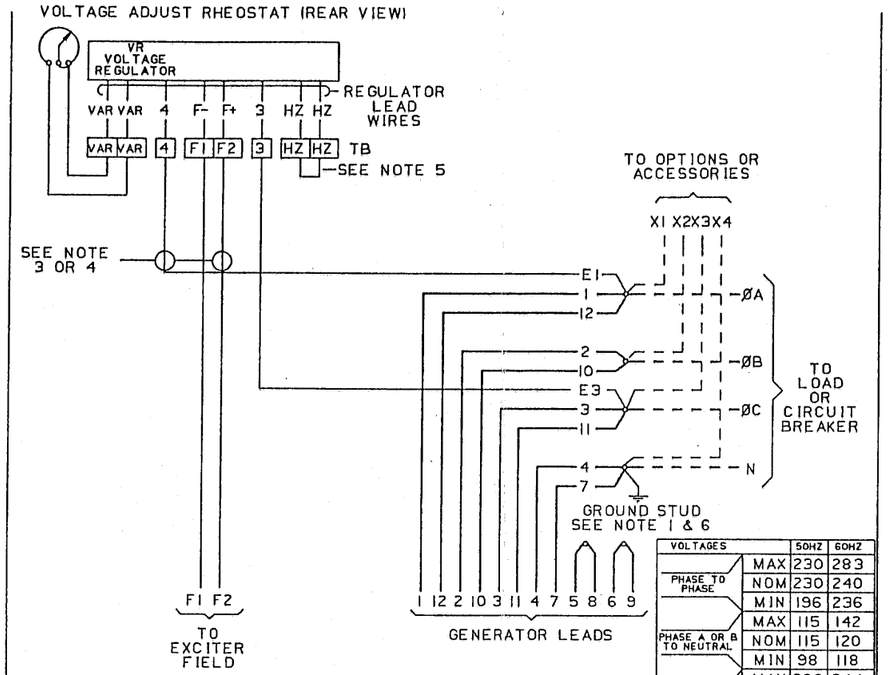

VOLTAGES		50HZ	60HZ
PHASE TO PHASE	MAX	230	283
	NOM	230	240
	MIN	196	236
PHASE A OR B TO NEUTRAL	MAX	115	142
	NOM	115	120
	MIN	98	118
PHASE C TO NEUTRAL	MAX	200	244
	NOM	200	208
	MIN	170	204

FIGURE 2 SERIES DELTA CONNECTION THREE PHASE LOADS

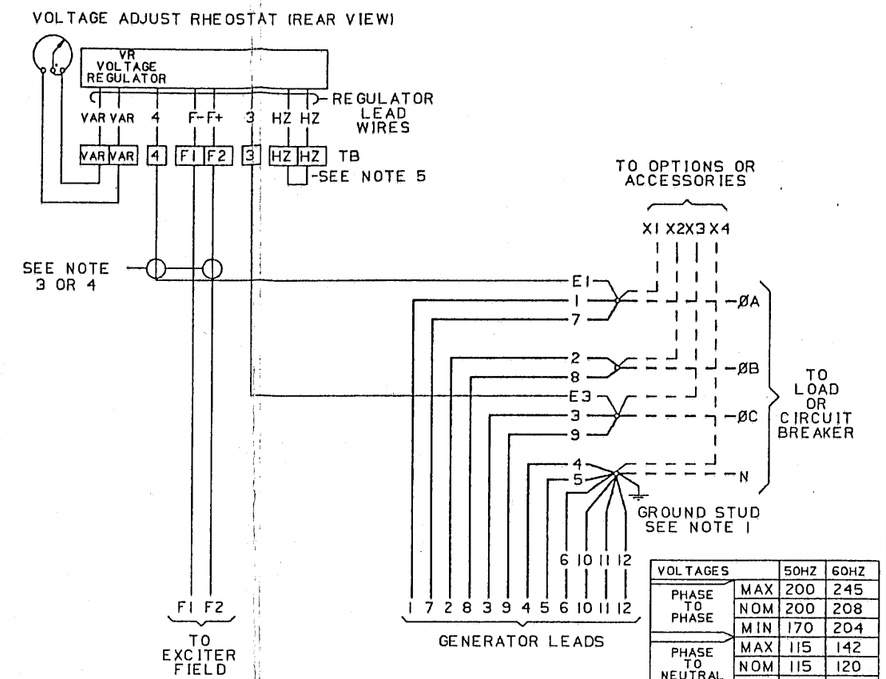

VOLTAGES		50HZ	60HZ
PHASE TO PHASE	MAX	200	245
	NOM	200	208
	MIN	170	204
PHASE TO NEUTRAL	MAX	115	142
	NOM	115	120
	MIN	98	118

FIGURE 3 PARALLEL WYE CONNECTION THREE PHASE LOADS

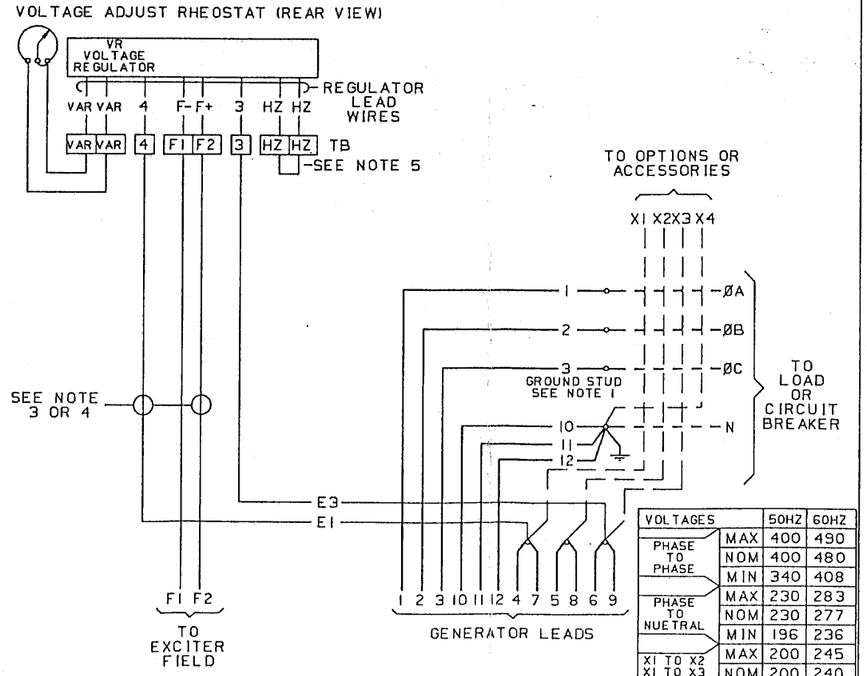

VOLTAGES		50HZ	60HZ
PHASE TO PHASE	MAX	400	490
	NOM	400	480
	MIN	340	408
PHASE TO NUETRAL	MAX	230	283
	NOM	230	277
	MIN	196	236
X1 TO X2 X1 TO X3 X2 TO X3	MAX	200	245
	NOM	200	240
	MIN	170	204
X1 TO X4 X2 TO X4 X3 TO X4	MAX	115	142
	NOM	115	139
	MIN	98	118

FIGURE 4 SERIES WYE CONNECTION THREE PHASE LOADS

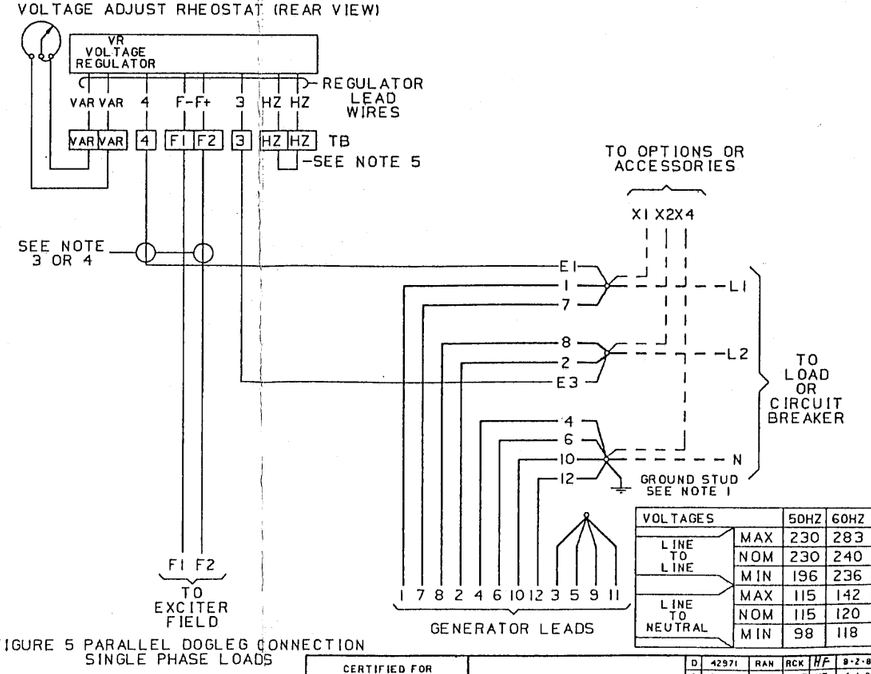

VOLTAGES		50HZ	60HZ
LINE TO LINE	MAX	230	283
	NOM	230	240
	MIN	196	236
LINE TO NEUTRAL	MAX	115	142
	NOM	115	120
	MIN	98	118

FIGURE 5 PARALLEL DOGLEG CONNECTION SINGLE PHASE LOADS

D	42971	RAN	RCK	HF	9-2-88
C	34187	DO	WOLF	HF	4-1-85
B	34280	RAN	RAN	DLB	2-26-85
ORIGINAL		RAN	JFO	TL	10-26-84
REV	ECO	ENGR	DR	CK	DATE

CERTIFIED FOR

KVA
VOLTAGE
P.O.
KATO S/N
DATE SIGN

DISTRIBUTION: RAG,REX,RIV,RRC,RSN, RST
ORIGINAL AT RMK

TITLE GENERATOR CONTROLS

MATL
SCALE 1ST S/N
DRAWING NUMBER SH 1 OF 1
P8800-826

P/N 560-22079-01

TESTED AT FACTORY AS ILLUSTRATED IN FIGURE _____