LEROY SOMER®

3600 en - 05.2006 / b

en

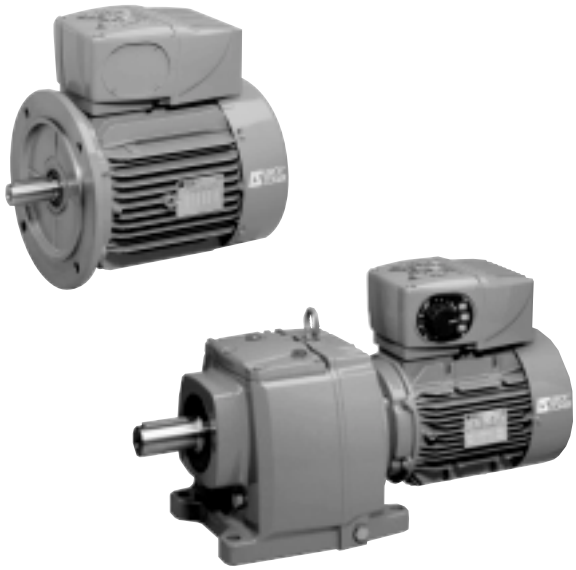

This manual is to be given to the end user

INTERBUS - S

Option card for VARMECA 20

Installation and maintenance

INTERBUS - S
Option card for VARMECA 20

NOTE

LEROY-SOMER reserves the right to modify the characteristics of its products at any time in order to incorporate the latest technological developments. The information contained in this document may therefore be changed without notice.

LEROY-SOMER gives no contractual guarantee whatsoever concerning the information published in this document and cannot be held responsible for any errors it may contain, nor for any damage resulting from its use.

CAUTION

For the user's own safety, this VARMECA 20 must be connected to an approved earth (⏚ terminal).

It is imperative that the equipment is supplied via an isolating device and a circuit-breaking device (power contactor) which can be controlled by an external safety system (emergency stop, fault detector).

The VARMECA 20 is fitted with safety devices which, in the event of a fault, control stopping and thus stop the motor. The motor itself can become jammed for mechanical reasons. Voltage fluctuations, and in particular power cuts, may also cause the motor to stop.
The removal of the causes of the shutdown can lead to restarting, which may be dangerous for certain machines or installations. In such cases, it is essential that the user takes appropriate precautions against the motor restarting after an unscheduled stop.

The VARMECA 20 is a component designed to be integrated in an installation or electrical machine. It is therefore the responsibility of the user to take all necessary precautions to ensure that the system complies with current standards.

For safety reasons, LEROY-SOMER prohibits the use of VARMECA 20 for hoisting applications.
LEROY-SOMER declines all responsibility in the event of the above recommendations not being observed.

INTERBUS - S
Option card for VARMECA 20

SAFETY AND OPERATING INSTRUCTIONS FOR ELECTRICAL ACTUATORS (In accordance with the low voltage directive 73/23/EEC modified by 93/68/EEC)

• Throughout the manual, this symbol warns of consequences which may arise from inappropriate use of the VARMECA 20, since electrical risks may lead to material or physical damage as well as constituting a fire hazard.

1 - General
Depending on their degree of protection, VARMECA 20 may contain moving parts, as well as hot surfaces, during operation.
Unjustified removal of protection devices, incorrect use, faulty installation or inappropriate operation could represent a serious risk to personnel, animals and equipment.
For further information, consult the manual.
All work relating to transportation, installation, commissioning and maintenance must be performed by experienced, qualified personnel (see IEC 364, CENELEC HD 384, or DIN VDE 0100 and national specifications for installation and accident prevention).
In these basic safety instructions, qualified personnel means persons competent to install, mount, commission and operate the product and possessing the relevant qualifications.

2 - Use
VARMECA 20 are components designed for integration in installations or electrical machines.
When integrated in a machine, commissioning must not take place until it has been verified that the machine conforms with directive 89/392/EEC (Machinery Directive).
It is also necessary to comply with standard EN 60204, which stipulates in particular that electrical actuators (which include VARMECA 20) cannot be regarded as circuit-breaking devices and certainly not as isolating switches.
Commissioning can take place only if the requirements of the Electromagnetic Compatibility Directive (89/336/EEC, modified by 92/31/EEC) are met.
VARMECA 20 meet the requirements of the Low Voltage Directive 73/23/EEC, modified by 93/68/EEC. The harmonised standards of the DIN VDE 0160 series in connection with standard VDE 0660, part 500 and EN 60146/ VDE 0558 are also applicable.
The technical characteristics and instructions concerning the connection conditions specified on the nameplate and in the documentation provided must be observed without fail.

3 - Transportation, storage
All instructions concerning transportation, storage and correct handling must be observed.
The climatic conditions specified in the technical manual must be observed.

4 - Installation
The installation and cooling of equipment must comply with the specifications in the manual supplied with the product.
VARMECA 20 must be protected against excessive stress. In particular, there must be no damage to parts and/or modification of the clearance between components during transportation and handling. Avoid touching the electronic components and contact parts.
VARMECA 20 contain parts which are sensitive to electrostatic stress and may be easily damaged if handled incorrectly. Electrical components must not be exposed to mechanical damage or destruction (risks to health!).

5 - Electrical connection
When work is performed on VARMECA 20 which are powered up, national accident prevention specifications must be respected.
The electrical installation must comply with the relevant specifications (for example conductor cross-sections, protection via fused circuit-breaker, connection of protective conductor). More detailed information is given in the manual.
Instructions for an installation which meets the requirements for electromagnetic compatibility, such as shielding, earthing, presence of filters and correct insertion of cables and conductors, are given in the documentation supplied with the VARMECA 20. These instructions must be followed in all cases, even if the VARMECA 20 carries the CE mark.
Adherence to the limits given in the EMC legislation is the responsibility of the manufacturer of the installation or the machine.

6 - Operation
Installations incorporating VARMECA 20 must be fitted with additional protection and monitoring devices as laid down in the current relevant safety regulations: law on technical equipment, accident prevention regulations, etc. Modification of VARMECA 20 using control software is permitted.
Active parts of the device and live power connections must not be touched immediately after the VARMECA 20 is powered down, as the capacitors may still be charged. In view of this, the warnings fixed to VARMECA 20 must be observed.
During operation, all protection devices must remain fixed in place.

7 - Servicing and maintenance
Refer to the manufacturer's documentation.

INTERBUS - S
Option card for VARMECA 20

CONTENTS

1 -INTRODUCTION 6
1.1 -Interbus Interface for VARMECA 20 6
1.2 -Product Conformance Certificate C263 6
1.3 -Overview Specification 6

2 -MECHANICAL INSTALLATION 7
2.1 -VARMECA 20 7

3 -ELECTRICAL INSTALLATION 8
3.1 -Interbus connector 8
3.2 -Interbus Data Connections 8
3.3 -Interbus Cable 8
3.4 -Interbus Network Termination 8
3.5 -Back-up Power Supply Connector 9
3.6 -Backup Power Supply Requirements 9
3.7 -Maximum Network Length 9

4 -GETTING STARTED 10
4.1 -Commissioning for VARMECA 20 INTERBUS extension 10
4.2 -LED diagnosis on interface board 11

5 -CYCLIC DATA 12
5.1 -What is Cyclic Data? 12
5.2 -Interbus Data Formats 12
5.2.1 -2 Cyclic Words Only 12
5.2.2 -3 Cyclic Words Only 12
5.2.3 -PCP V2.0 Non-Cyclic Data with 2 Cyclic Words 12
5.2.4 -PCP V2.0 Non-Cyclic Data with 3 Cyclic Words 12
5.2.5 -LS Non-Cyclic Data with 2 Cyclic Words 13
5.2.6 -LS Non-Cyclic Data with 3 Cyclic Words 13
5.3 -Storing Parameters 13
5.3.1 -Interbus Interface 13

6 -NON-CYCLIC DATA 14
6.1 -Mode 1 - PCP V2.0 14
6.1.1 -WRITE Object 14
6.1.2 -READ Object 14
6.1.3 -STATUS Object 14
6.1.4 -Reading parameters using PCP (Mode 1) 15
6.1.5 -Writing parameters using PCP (Mode 1) 15
6.2 -Mode 2 - LS Single Word Protocol 15
6.2.1 -Reading parameters using LS Protocol (Mode 2) 16
6.2.2 -Writing parameters using LS Protocol (Mode 2) 17
6.3 -Interbus Set-up using Non-Cyclic Data 18

7 -INTERBUS CMD TOOL SUPPORT FILES 19
7.1 -Interbus CMD Tool 19
7.2 -Interbus Data Formats 19

INTERBUS - S
Option card for VARMECA 20
CONTENTS

8 -DIAGNOSTICS 20
8.1 -Fieldbus Code 20
8.2 -Firmware Version 20
8.3 -Node Address 20
8.4 -Network Data Rate 20

9 -ADVANCED FEATURES 21
9.1 -Network Loss Trip 21
9.2 -Non-Cyclic Parameter Store 21

10 -QUICK REFERENCE 22
10.1 -INTERBUS-S Parameter List (Access via CDC VMA20 keypad or PEGASE VMA20 soft) 22
10.2 -Interbus Data Formats 23
10.3 -Control Word 23
10.4 -Status Word 23
10.5 -Parameter adresses 24

en

1 - INTRODUCTION

NOTE **DRIVE PARAMETERS ARE DENOTED IN THIS MANUAL BY "#MM.PP", WHERE MM REFERS TO THE MENU NUMBER, AND PP REFERS TO THE PARAMETER NUMBER WITHIN THAT MENU. PLEASE REFER TO THE VARMECA 20 MANUAL FOR FULL PARAMETER DEFINITIONS.**

1.1 - Interbus Interface for VARMECA 20

The Interbus interface for VARMECA 20 is a single option card that fits neatly inside the Drive. The Interbus interface uses a 16-bit processor, and communicates at 500 Kbits/sec, currently the only data rate available for Interbus. CDC VMA 20 Keypad or PEGASE VMA 20 Soft V1.3 and above fully support the VARMECA 20 Interbus interface.
Parameter data is transferred to and from the VARMECA 20 using a 2-wire RS485 link into the serial communications connector on the VARMECA 20.
Although power is taken from the VARMECA 20 under normal operating conditions, an optional back-up power supply can also be connected to the Interbus card. This ensures that the Interbus network is not broken and the Interbus interface continues to communicate, even when the drive is powered down.

1.2 - Product Conformance Certificate C263

The VARMECA 20 Interbus interface has been tested and awarded Product Conformance Certificate C263 by the Interbus Club.

1.3 - Overview Specification

- Auto slave configuration of data format and data consistency during Interbus network initialisation.
- Auto-configuration of the serial communications port when the Interbus interface is connected to the VARMECA 20.
- Choice of two or three 16 bit input/output words.
- Non-cyclic data channel using PCP V2.0 or LEROY-SOMER non-cyclic sub-protocol. Non-cyclic data can also be disabled.
- Connect a maximum of 128 VARMECA 20 drives to a single Interbus master controller.

2 - MECHANICAL INSTALLATION

2.1 - VARMECA 20

Fitted in VARMECA 20 cover, the option is based on two printed circuit boards: one supporting all INTERBUS-S components and another one supporting micro controller for interfacing INTERBUS-S with VARMECA 20.

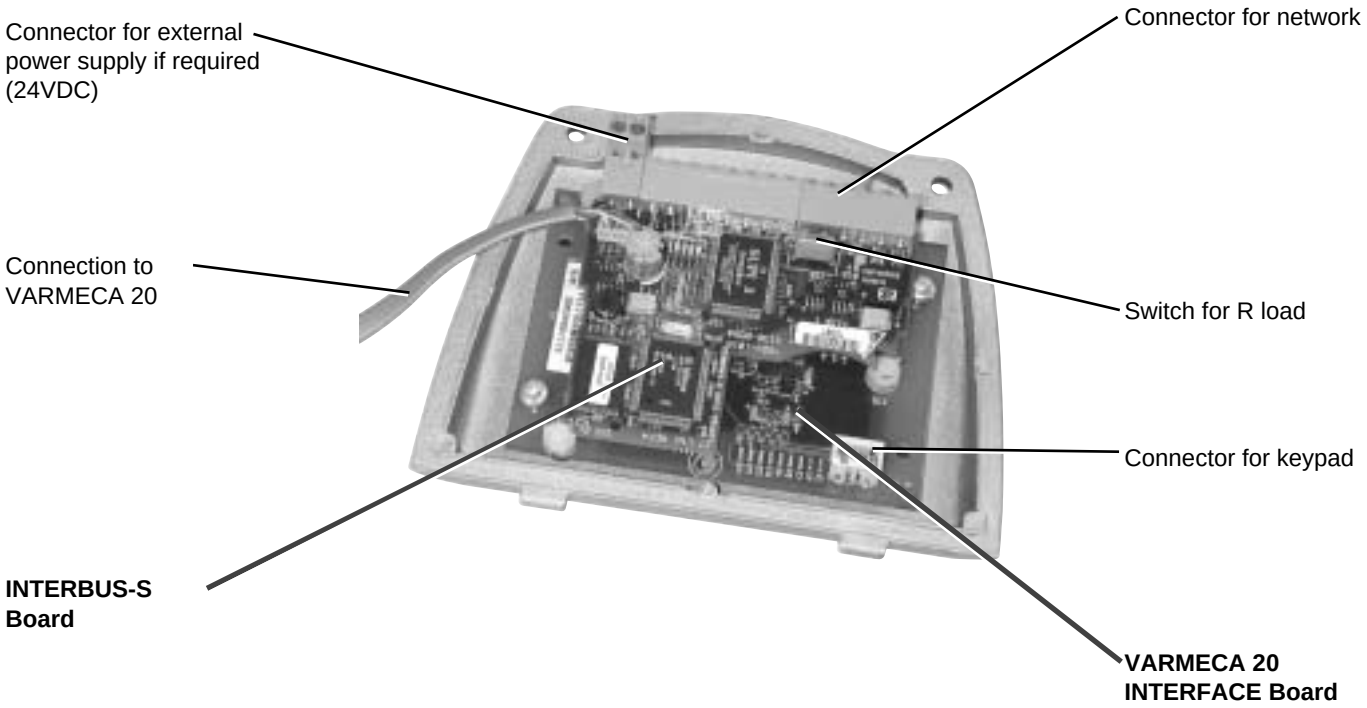

en

3 - ELECTRICAL INSTALLATION

3.1 - Interbus Connector

The VARMECA 20 Interbus interface has a 6-way screw terminal block connector for the Interbus Remote bus IN data connections, and an 8-way screw terminal block connector for the Interbus Remote Bus OUT data connections.

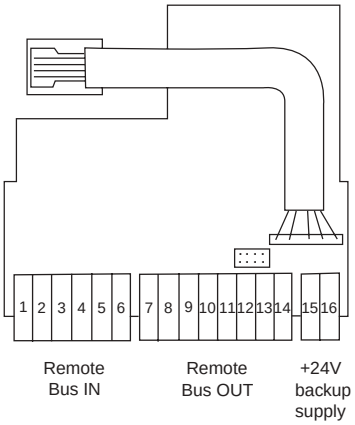

The pin connections for the Interbus Remote Bus IN and OUT connectors are given in the table below. 0V ISO is completely isolated from 0V COM, which is internally linked to the 0V line of the VARMECA 20.

Terminal	Function	Description
1	/DO1	Negative Data IN line, connect to /DO2
2	DO1	Positive Data IN line, connect to DO2
3	/DI1	Negative Data OUT line, connect to /DI2
4	DI1	Positive Data OUT line, connect to DI2
5	0V ISO	0V Isolated
6	Screen	Remote Bus IN cable screen connection
7	/DO2	Negative Data OUT line, connect to /DO1
8	DO2	Positive Data OUT line, connect to DO1
9	/DI2	Negative Data IN line, connect to /DI1
10	DI2	Positive Data IN line, connect to DI1
11	0V COM	OV Common, internally linked to Drive OV
12	RBST	Remote Bus OUT Enable
13	+5V	+5V Comms
14	Screen	Remote Bus OUT cable screen connection

3.2 - Interbus Data Connections

To connect a VARMECA 20 to the Interbus network, make the connections as shown in the diagram below. The length of the "pigtail" screen connections should be kept as short as possible.

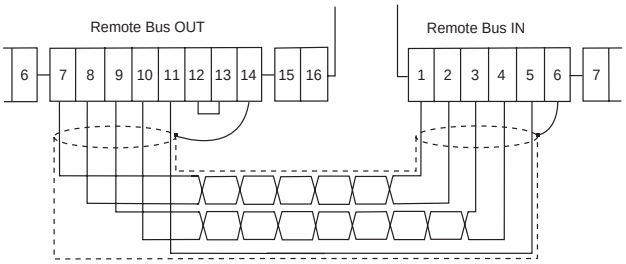

NOTE **The Remote Bus OUT Enable (terminal 12) must be linked to +5V (terminal 13) if the Remote Bus OUT terminals are to be connected to another node "downstream" on the network.**

3.3 - Interbus Cable

Interbus cable has three twisted pairs plus overall screening. The colours normally used on Interbus networks are shown below.

Cable	Data signal	Terminal	D-type	Description
Green	/DO1, /DO2	1, 7	6	Negative data OUT line
Yellow	DO1, DO2	2, 8	1	Positive data OUT line
Pink	/DI1, /DI2	3, 9	7	Negative data IN line
Grey	DI1, DI2	4, 10	2	Positive data IN line
Brown	0V	5, 11	3	0V Common
	RBST, +5V	12, 13	5, 9	Remote Bus OUT Enable
Shield	Screen	6, 14	Shell	Cable screen

Interbus networks cable specifically designed to carry high frequency signals. Low quality cable will attenuate the signals, and may render the signal unreadable for the other nodes on the network.

NOTE **LEROY-SOMER can only guarantee correct and reliable operation of the VARMECA 20 Interbus interface if all other equipment installed (including the network cable) has been approved.**

3.4 - Interbus Network Termination

External termination resistors are not required on Interbus networks, as each section of cable is automatically terminated on every Interbus node. The connections required for the last node on the network are shown below. (Backup +24V power supply is optional.) The Screen connection on the Remote Bus OUT connector (pin 14) should be linked to the power earth terminal (PE) on the VARMECA 20 power connector.

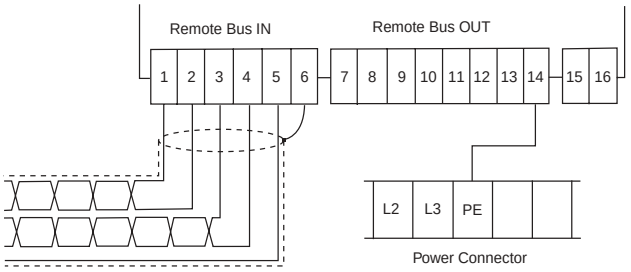

3.5 - Back-up Power Supply Connector

Usually, the Interbus interface card will draw power via the communications lead from the unregulated +28V rail of the VARMECA 20. If the interface is disconnected from the VARMECA 20, e.g. to check and update the configuration of the Drive using CDC VMA 20 Keypad or PEGASE VMA 20 Soft, the Interbus interface will power down, breaking the Interbus network ring, and causing the Interbus network to stop communicating.
By connecting a +24V back-up power-supply to the interface card, the Interbus ring is not broken, and the node will continue to communicate with the master controller. The Interbus interface will indicate (using the status word) to the master controller that it is not currently communicating with the drive. When the Interbus interface is re-connected to the VARMECA 20, communications will be re-established automatically.

Terminal	Function	Description
15	+24V	+24V Interbus. This allows a back-up power supply to keep the Interbus network operating if the VARMECA 20 is switched off
16	0V	0V Interbus

NOTE **Use of a back-up power supply is strongly recommended with the VARMECA 20 Interbus interface.**

3.6 - Backup Power Supply Requirements

The back-up power supply should be +24V ±20%, and should have sufficient current capability to supply all VARMECA 20 Interbus nodes connected to it. This condition will occur if the main power supply to the VARMECA 20 is lost. The consumption of the Interbus interface is dependent on the supply voltage, with typical and maximum currents listed in the table below.

Back-up Supply Voltage	Maximum Current	Typical Current
19.2V (24V -20%)	70mA	0mA
21.6V (24V -10%)	65mA	10mA
24V nominal	60mA	35mA
26.4V (24V +10%)	55mA	48mA
30V (24V+20%)	50mA	45mA

Under normal operating conditions, the VARMECA 20 and the back-up power supply share the power supply requirements of the Interbus interface. The Typical Current column shows the current drawn from the back-up power supply for the typical, minimum and maximum voltages.

NOTE **LEROY-SOMER strongly recommends that a dedicated external 24V supply should be used, as electrical noise from other external sources may cause disturbance to the Interbus system.**

3.7 - Maximum Network Length

The maximum length of cable for each network segment is 1200m, so the maximum total length of the Interbus depends on the data format being used.
If format F_103 or F_203 is used, this equates to 4 words (64 bits) per node, so a maximum of 64 nodes may be connected to a single master controller.
If format F_002 is used, each VARMECA 20 will only use 2 words (32 bits) on the network, allowing a maximum of 128 nodes with a single master controller.
Another limitation is that an Interbus master controller can only handle 62 nodes with PCP communications support on a single network.

en

4 - GETTING STARTED

4.1 - Commissioning for VARMECA 20 INTERBUS-S extension

• 1 - Preset of parameters via CDC VMA 20 keypad (Software read in LOG CDC VMA should be 0138 or greater) or PEGASE VMA 20 Soft (issue 1.08 and above) by disabling INTERBUS-S board through K1 to be set to 0

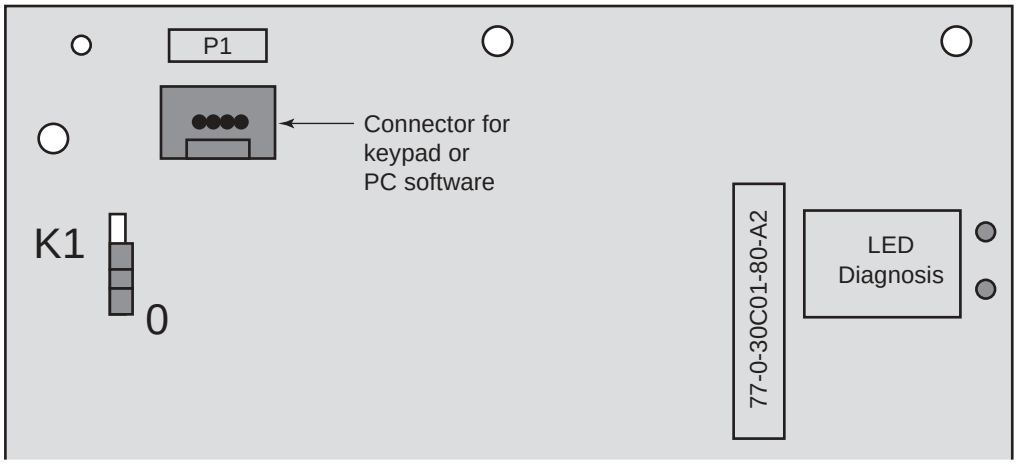

• 2 - Set or check VARMECA20 internal parameters : (parameter name as seen on display between ")
Turning parameter 1551 to ON will set the parameters of the fieldbus as per attached.

1570 BUS ENABLE = ON	→	serial communication enable (fieldbus)
1571 SUPERVISION = ON	→	supervision of serial communication
1572 REF. VIA BUS = ON	→	speed reference F via serial communication
1573 REF. N = xxxHz	→	speed reference F

• 3 - To test operation of serial communication, switch VARMECA20 ON and OFF :

1580 VMA CONTROL = 02	→	VARMECA 20 is ON
1580 VMA CONTROL = 00	→	VARMECA 20 is OFF

• 4 - Set of INTERBUS parameter :

"1503 ADRESS VMA	→	VARMECA20 address
"1511 P2 IN CYCL. "1512 P3 IN CYCL.	→	Read parameter
"1521 P2 OUT CYCL "1522 P3 OUT CYCL	→	Write parameter

• 5 - Disconnect keypad and turn K1 back to 1 for fieldbus operation

4.2 - LED diagnosis on interface board

LED *Green*	LED *red*	OPERATION
OFF	OFF	INTERBUS board is not connected to interface board. Keypad is or is not connected.
ON	1 to 2 pulses	Signalling when connecting INTERBUS board to interface board.
ON	OFF	INTERBUS board connected to interface board without network message.
Flashing (fast)	OFF	Network message sent. Fieldbus communication OK
ON	OFF	Network connection removed.

en

LED *Green*	LED *red*	OPERATION
OFF	ON	Connection failure between interface board and VARMECA20, when keypad is connected ➔ check connection
OFF with few flashes	ON with few losses	Connection failure between interface board and VARMECA20, when INTERBUS board is connected and network ON ➔ check connection
Flashing (+ or – fast) or OFF with few flashes	Flashing) or OFF with few flashes	Both keypad and INTERBUS board are connected in the same time, with or without network communication. ➔ remove keypad connection and set connection for INTERBUS board
Flashing (low with longer OFF	OFF with few flashes	Connection failure between INTERBUS board and interface board during network communication ➔ check connection
ON with few losses	OFF with few flashes	Connection failure between INTERBUS board and interface board following one stop of network communication. ➔ check connection (flashing of LED Red, LED Green OFF) ➔ check connection of INTERBUS board
ON	OFF	Network communication OK but VARMECA20 address wrong ➔ change 1503_ADRESS_VMA
Flashing (fast)	Flashing (fast)	Network communication OK but with wrong values ➔ check setting values for parameter 1521_P2_OUT_CYCL and 1522_P3_OUT_CYCL

5 - CYCLIC DATA

NOTE **"OUT data" and "IN data" describe the direction of data transfer as seen by the Interbus network master controller. "Cyclic Data" is also known as "Process Data".**

5.1 - What is Cyclic Data?

Cyclic data is a method of data transfer that must be set-up during network configuration, but is transmitted automatically once configuration is complete. The high-speed data transfer is achieved by transmitting only a 16-bit data value for each cyclic channel over the Interbus network, and relying on local mapping information within the drive to ensure the correct data is sent to the correct locations. This method relies on the master controller program writing and reading data values to and from the registers allocated to the node during network configuration, and the source and destination of IN and OUT data being set-up correctly in the drive itself.
The flexibility of the VARMECA 20 Interbus interface means that each cyclic data OUT channel can be directed to any read-write drive parameter. Similarly, each cyclic data IN channel can use any drive parameter as a source of data.

NOTE **The cyclic data mappings cannot be changed dynamically, as the VARMECA 20 must be powered down to connect either CDC VMA 20 Keypad or PEGASE VMA 20 Soft of the Universal Keypad. Changes will take effect when the**
Interbus interface is re-connected, and the drive powered up.

5.2 - Interbus Data Formats

VARMECA 20: #15.05

The default data format for the VARMECA 20 Interbus interface is 3 cyclic data words, plus Mode 1 (PCP V2.0) non-cyclic communications.

Format (#15.05)	Non-cyclic data mode	Cyclic words	Interbus ID Code	Process Data Channel	CMD Tool Ref
0.02	0	2	0x03 (3)	32 bits	F_002
0.03	0	3	0x03 (3)	48 bits	F_003
1.02	1	2	0xF3 (242)	32 bits	F_102
1.03	1	3	0xF3 (243)	48 bits	F_103
2.02	2	2	0x03 (3)	48 bits	F_202
2.03	2	3	0x03 (3)	64 bits	F_203

NOTE **To implement a change in the data format, the VARMECA 20 Interbus interface must be powered down. If a back-up supply is connected, this must also be removed to allow changes to take effect.**

5.2.1 - 2 Cyclic Words Only

This data format provides two 16-bit cyclic data words only. To select this data format, set #15.05 to 0.02.

Data Word	Mapping Parameter	Default Mapping Status
IN Word 1	-	Status word (fixed as #90.12)
IN Word 2	#15.11	#0.17 operating motor frequence
OUT Word 1	-	Control word (fixed as #90.12)
OUT Word 2	#15.21	#0.10 preset

5.2.2 - 3 Cyclic Words Only

This data format provides three 16-bit cyclic data words only. To select this data format, set #15.05 to 0.03.

Data Word	Mapping Parameter	Default Mapping Status
IN Word 1	-	Status word (fixed as #90.12)
IN Word 2	#15.11	#0.17 operating motor frequence
IN Word 3	#15.12	#0.16 operating current
OUT Word 1	-	Control word (fixed as #90.12)
OUT Word 2	#15.21	#0.43 local ref.
OUT Word 3	#15.22	#0.10 speed reference 1

5.2.3 - PCP V2.0 Non-Cyclic Data with 2 Cyclic Words

This data format provides two 16-bit cyclic data words, plus one non-cyclic data word for the PCP channel. (See section 6.1) PCP communications can be used to access any parameter in the VARMECA 20. To select this data format, set #15.05 to 1.02.

Data Word	Mapping Parameter	Default Mapping Status
IN Word 1	-	Status word (fixed as #90.12)
IN Word 2	#15.11	#0.17 operating motor frequence
OUT Word 1	-	Control word (fixed as #90.12)
OUT Word 2	#15.21	#0.43 local ref.

5.2.4 - PCP V2.0 Non-Cyclic Data with 3 Cyclic Words

This data format provides three 16-bit cyclic data words, plus one non-cyclic data word for the PCP channel. (See section 6.1) PCP communications can be used to access any parameter in the VARMECA 20. To select this data format, set #15.05 to 1.03.

Data Word	Mapping Parameter	Default Mapping Status
IN Word 1	-	Status word (fixed as #90.12)
IN Word 2	#15.11	#0.17 operating motor frequence
IN Word 3	#15.12	#0.16 operating current
OUT Word 1	-	Control word (fixed as #90.12)
OUT Word 2	#15.21	#0.43 local ref.
OUT Word 3	#15.22	#0.10 speed reference 1

5.2.5 - LS Non-Cyclic Data with 2 Cyclic Words

This data format provides four 16-bit cyclic data words, with the first word reserved for non-cyclic data. LS Non-Cyclic data can be used to access any parameter in the VARMECA 20. (See section 6.2) To select this data format, set #15.05 to 2.02.

Data Word	Mapping Parameter	Default Mapping Status
IN Word 0	-	Non-cyclic data word
IN Word 1	-	Status word (fixed as #90.12)
IN Word 2	#15.11	#0.17 operating motor frequence
OUT Word 0	-	Non-cyclic data word
OUT Word 1	-	Control word (fixed as #90.12)
OUT Word 2	#15.21	#0.43 local ref.

5.2.6 - LS Non-Cyclic Data with 3 Cyclic Words

This data format provides four 16-bit cyclic data words, with the first word reserved for non-cyclic data. LS Non-Cyclic data can be used to access any parameter in the VARMECA 20. (See section 0) To select this data format, set #15.05 to 2.03.

Data Word	Mapping Parameter	Default Mapping Status
IN Word 0	-	Non-cyclic data word
IN Word 1	-	Status word (fixed as #90.12)
IN Word 2	#15.11	#0.17 operating motor frequence
IN Word 3	#15.12	#4.20, motor load as % of rated motor load
OUT Word 0	-	Non-cyclic data word
OUT Word 1	-	Control word (fixed as #90.12)
OUT Word 2	#15.21	#0.43 local ref.
OUT Word 3	#15.22	Not mapped

5.3 - Storing Parameters

Menu 15 parameters are stored in the VARMECA 20 and the Interbus interface card. If the VARMECA 20 has previously stored Interbus settings, these will always be used by the Interbus interface. All #15.PP parameters will be read and stored automatically inside the Interbus interface.

5.3.1 - Interbus Interface

When the Interbus interface establishes the "FbuS" communications link, it checks the value in #15.01. If this is set to 2, it uploads all menu 15 parameters from the drive and stores them in the FLASH memory.

6 - NON-CYCLIC DATA

The non-cyclic data channel provides a method for the master controller to read from or write to any parameter within the drive. This channel can be used for single infrequent data transfers, or uploading and downloading parameter sets to or from a particular node.
The VARMECA 20 Interbus interface provides two non-cyclic data formats, plus the option to disable non-cyclic data.
Non-cyclic data access to drive parameters using PCP communications (Mode 1) is controlled by the master controller program, and uses macros defined using the Interbus CMD Network Configuration Tool. (See section 7)
Parameter access using the LS Single Word Format (Mode 2) non-cyclic data is controlled entirely by the master controller program.

Non-Cyclic Mode	Data Format (#15.05)	Description
Disabled	0.xx	Non-cyclic data disabled.
Mode 1	1.xx	Peripheral Communications Protocol (PCP) V2.0, as used in Unidrive. This uses a single non-cyclic data (Word 0) for each node.
Mode 2	2.xx	LS Single Word Format, as used on Profibus-DP for VARMECA 20, Unidrive and Mentor II. This uses a single non-cyclic data (Word 0) for each node.

To configure the parameter channel in the Interbus CMD Tool, use the following settings:
Message Length Transmit: 64 bytes
Message Length Receive: 64 bytes
Client services supported are READ, WRITE and GET OD LONG.

6.1 - Mode 1 - PCP V2.0

Mode 1 non-cyclic communications implements the Peripheral Communication Protocol (PCP) Version 2.0. The VARMECA 20 Interbus has server functionality only. When an Interbus network is initialised, each node with PCP support is assigned a Communication Reference, or CR. The CR is used to identify which the node for which each command is intended.
The following services are supported:

Function	Description
INITIATE	Opens a PCP connection with the node at the defined CR
ABORT	Closes the PCP connection to the node at the defined CR
READ	Reads an Index and Sub-Index from node at the defined CR
WRITE	Writes a specified number of data bytes to an Index and Sub-Index in node at the defined CR
STATUS	Returns the current state and current operating state of the remote device at the defined CR
IDENTIFY	Returns the "ID plates" of the device at the defined CR. The following info is returned: Manufacturer's_Name: "LEROY-SOMER" Device_Name "SE RD-74" Revision: "Version 01.00"

VARMECA 20 parameters are not addressed directly using the PCP channel. Three special objects are used to access the VARMECA 20 parameters.

6.1.1 - WRITE Object

Index: 0x5000 Sub-Index: 0x00

This WRITE object is used to send a data value to a parameter within the VARMECA 20. Four bytes are written to this object.

1. Menu number
2. Parameter number
3. Data high-byte
4. Data low-byte

To check that the WRITE object command has been successfully
implemented, use the STATUS object to check the status byte returned.

6.1.2 - READ Object

Index: 0x5001 Sub-Index: 0x00

Reading a parameter value from the VARMECA 20 is done is two stages. The data bytes written to the READ object defines the target parameter to be read, but does not return the actual parameter value.
Two bytes are written to this object.

1. Menu number
2. Parameter number

The actual value returned from the value must be read using the STATUS object. Once a READ parameter has been defined, the READ object is not required again until the target parameter needs to be changed.

6.1.3 - STATUS Object

Index: 0x5002 Sub-Index: 0x00

This object returns the menu, parameter and data value of the last object sent, plus a status byte. The VARMECA 20 parameter specified by the READ object is actually read on receipt of the STATUS object. Re-reading the STATUS object will re-read the VARMECA 20 parameter and return the updated parameter value.

1. Menu number
2. Parameter number
3. Data high-byte
4. Data low-byte
5. Status byte

The status byte indicates whether the READ or WRITE message was implemented successfully.

Status Byte	Indication	Description
0x80	READY	The previous PCP message was implemented successfully in the VARMECA 20
0xC0	ERROR	An error occurred with the previous PCP message. This can be caused writing a value of range, writing to a read-only parameter of reading from a write-only parameter.

6.1.4 - Reading parameters using PCP (Mode 1)

To read a parameter from a VARMECA 20 using the PCP channel, the READ and STATUS objects must be used. The menu and parameter references are written to the READ object, with the data value and status byte returned when the STATUS object is read.

The sequence of events required is shown in the diagram below.

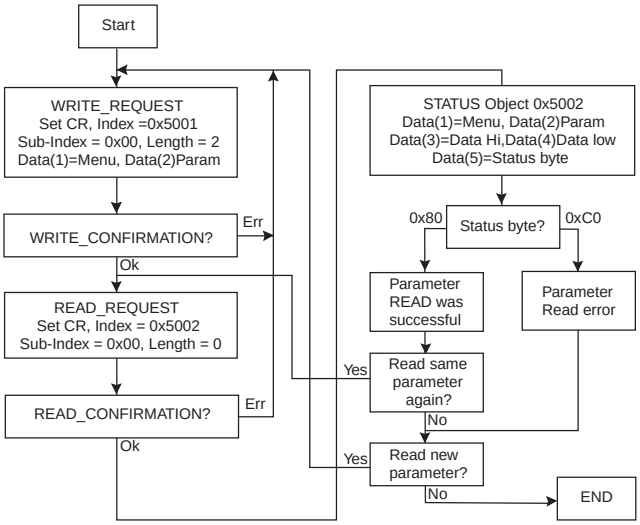

A parameter error can occur with the STATUS object, but this is not due to any Interbus network error. A parameter will occur if the target parameter specified in the READ object does not exist or is WRITE only.
A parameter error will be indicated as Error Class 0x08, Error 0x00, with the Additional Error Code of 0x01.

Error Class	Error Code	Additional Code	Parameter Write Status
00	00	N/A	Parameter read was implemented OK
08	00	0x01	Parameter access error. Parameter did not exist, or was write only.

An INITIATE_REQUEST command must be used to establish a PCP connection to each node on the network to which PCP commands will be sent. Once a PCP connection has been established, the INITIATE_REQUEST command is not required again unless a network error causes the PCP connection to be aborted by the master controller.

6.1.5 - Writing parameters using PCP (Mode 1)

To write a parameter to the VARMECA 20 using the PCP channel, the WRITE object must be used. The menu and parameter references, plus the data high and data low bytes are written to the WRITE object.

The sequence of events required is shown in the diagram below.

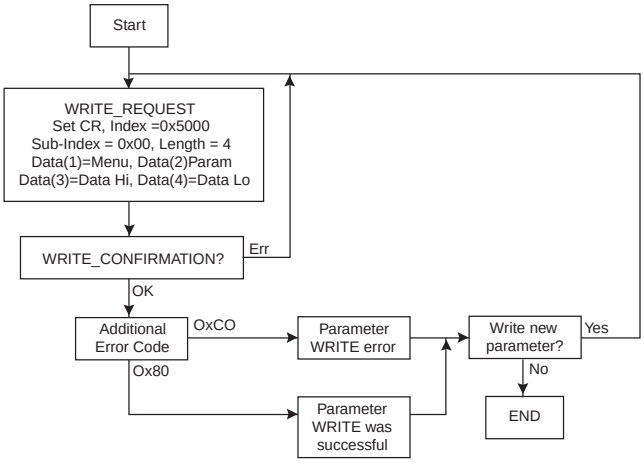

A parameter error can occur with a WRITE object, but this is not due to any error on the Interbus network. A parameter will occur if the target parameter does not exist or is read only, or the data value sent is out of the permitted range for that parameter.
A parameter error will be indicated as Error Class 0x08, Error 0x00, with the Additional Error Code of 0x01.

Error Class	Error Code	Additional Code	Parameter Write Status
00	00	N/A	Parameter write was implemented OK
08	00	0x01	Parameter access error. Parameter did not exist, was read only of the data value written was out of range.

An INITIATE_REQUEST command must be used to establish a PCP connection to each node on the network to which PCP commands will be sent. When a PCP connection has been established, the INITIATE_REQUEST command is not required again unless a network error causes the PCP connection to be aborted by the master controller.

6.2 - Mode 2 - LS Single Word Protocol

The LS Single Word Protocol (Mode 2) of non-cyclic data uses one word for non-cyclic data. The non-cyclic sub-protocol requires a specific sequence of 4 words or "telegrams" to implement the parameter access. Each non-cyclic word or telegram is split into 2 bytes to implement the sub-protocol, with the high byte containing the control codes for each telegram, and the low byte containing the data for each telegram.

b15	b14	b13	b12	b11	b10	b9	b8
R/W	Error	X	X	Stamp number			

b7	b6	b5	b4	b3	b2	b1	b0
Data byte							

Bit	Function	Values	Description
0 to 7	Data	0 to 255	Depending on the stamp number of the telegram, this byte contains the menu or parameter number, or data high or low byte.
8 to 11	Stamp number	0 to 4	Indicates the stamp number of the word. This shows which part of the message is currently in progress. Setting the stamp number to 0 resets the internal non-cyclic state machine
12, 13	Not Used		These should be set to 0.
14	ERR	0 = Data OK 1 = Error	Indicates the success or failure of the message. Failure could occur if the parameter does not exist, or is a read-only or write-only parameter.
15	R/W	0 = Write 1 = Read	Defines whether the data word is part of a READ or WRITE cycle is in progress.

NOTE **X = don't care. Generally, these bits should be set to 0. If a message is aborted part way through, the non-cyclic OUT word should be reset to 0. This will reset the non-cyclic state machine, and allow the message sequence to be restarted.**

6.2.1 - Reading parameters using LS Protocol (Mode 2)

To read parameters using the non-cyclic channel, the following "telegrams" must be transmitted to construct the final message.

- Telegram 1 Define menu number.
- Telegram 2 Define parameter number.
- Telegram 3 Request high data byte.
- Telegram 4 Request low data byte.

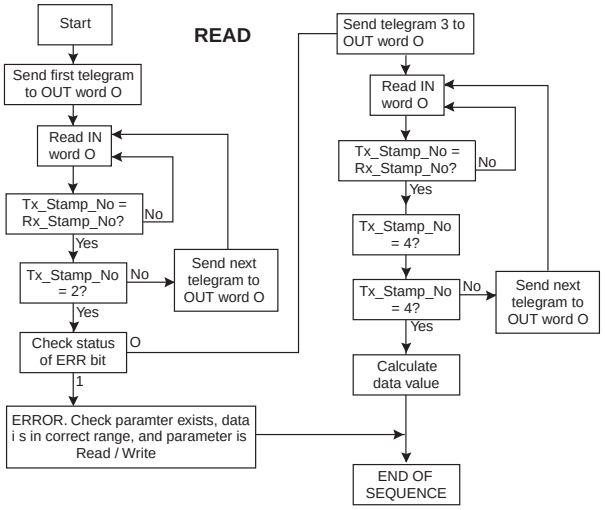

The following example telegrams show how to read the data value from 1.22 in the VARMECA 20.

TELEGRAM 1

The first telegram from the DP master indicates a READ cycle, and the stamp number is 1. The data byte would contain the menu number for the parameter that is to be read.

Bit	b15-b12	b11-b8	b7-b4	b3-b0
Value	1XXX	0001	0000	0000

Data word = 0x8100 Stamp number = 1 Menu = 0

When the first telegram has been received and processed in the DP node, it is mirrored in the non-cyclic IN word back to the PLC. This is the signal to the master controller program that the first telegram of the message has been received and understood, and the second telegram can be transmitted.

TELEGRAM 2

The second telegram from the DP master also indicates a READ cycle, but the stamp number is now 2. The data byte would contain the parameter number for the parameter that is to be read.

Bit	b15-b12	b11-b8	b7-b4	b3-b0
Value	1XXX	0010	0001	0001

Data word = 0x8211 Stamp number = 2 Parameter = 17

When the second telegram has been received and processed in the DP node, it is mirrored in the non-cyclic IN word. This is the signal to the master controller program that the second telegram of the message has been received and understood, and the third telegram can be transmitted.

If telegrams 1 and 2 were not received correctly, or an invalid parameter was specified, e.g. parameter is write only, or does not exist, the Interbus interface will set the ERROR bit to 1 (b14 = 1). The data bits will have no significance.

Bit	b15-b12	b11-b8	b7-b4	b3-b0
Value	11XX	0010	XXXX	XXXX

Data word = 0xC2XX Stamp number = 2

If an error is reported, it is recommended that the non-cyclic data word is set to 0 to ensure that the non-cyclic state machine is completely reset, and ready for the next non-cyclic READ or WRITE sequence.

TELEGRAM 3

The third telegram from the DP master acts as the indication to the DP slave to send the data high byte from the requested parameter. The data byte is not used in this telegram, and should be set to 0.

Bit	b15-b12	b11-b8	b7-b4	b3-b0
Value	1XXX	0011	XXXX	XXXX

Data word=0x83XX Stamp number=3 Data high byte=XX

When the third telegram has been received and processed in the DP node, the node will mirror the stamp number in the non-cyclic IN word, and load the high byte of the parameter value into the data byte.

Bit	b15-b12	b11-b8	b7-b4	b3-b0
Value	10XX	0011	0000	0000

Data word=0x8300 Stamp number=3 Data high byte=0x0

TELEGRAM 4

The fourth telegram from the DP master acts as the indication to the DP slave to send the data high byte from the requested parameter. The data byte is not used in this telegram and should be set to 0.

Bit	b15-b12	b11-b8	b7-b4	b3-b0
Value	1XXX	0100	XXXX	XXXX

Data word = 0x84XX Stamp number = 4

When the fourth telegram has been received and processed in the DP node, the node will mirror the stamp number in the non-cyclic IN word, and load the low byte of the parameter value into the data byte.

Bit	b15-b12	b11-b8	b7-b4	b3-b0
Value	1XXX	0100	0011	0010

Data word=0x8432 Stamp number=4 Data low byte=0xDC

Speed feedback = (high data byte * 256) + low data byte
= (0x00 * 0x100) + 0x32
= 0x0032
= 50 Hz

6.2.2 - Writing parameters using CT Protocol (Mode 2)

To write to parameters using the non-cyclic channel, four telegrams must be sent on each network cycle to construct the final message.

- Telegram 1 Define menu number.
- Telegram 2 Define parameter number.
- Telegram 3 Set data high byte.
- Telegram 4 Set data low byte.

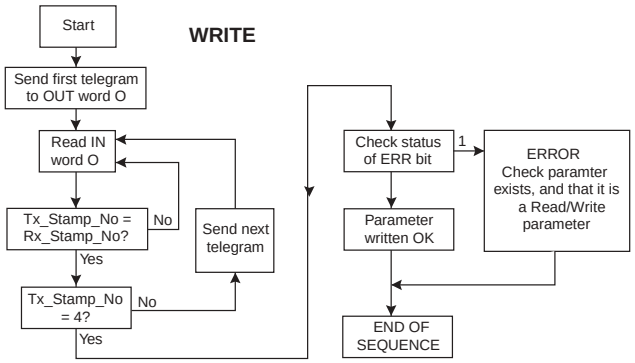

The following example telegrams show how to write a value of 1500 to #1.21 in the VARMECA 20.

TELEGRAM 1

The first telegram from the DP master indicates a WRITE cycle by setting the R/W bit to 0. The stamp number is set to 1. The data byte contains the menu number for the parameter that is to be written to.

Bit	b15-b12	b11-b8	b7-b4	b3-b0
Value	0XXX	0001	0000	0000

Data word = 0x0101 Stamp number = 1 Menu = 0

When the first telegram has been received and processed in the DP node, it is mirrored in the non-cyclic IN word. This is the signal to the master controller program that the first telegram of the message has been received and understood, and the second telegram can be transmitted.

TELEGRAM 2

The second telegram from the DP master also indicates a Write cycle, but the stamp number is now set to 2. The data byte would contain the parameter number for the parameter that is to be written to.

Bit	b15-b12	b11-b8	b7-b4	b3-b0
Value	0XXX	0010	0000	1100

Data word = 0x020C Stamp number = 2 Parameter = 12

When the first telegram has been received and processed in the DP node, it is mirrored in the non-cyclic IN word. This is the signal to the master controller program that the second telegram of the message has been received and understood, and the third telegram can be transmitted.

TELEGRAM 3

The third telegram from the DP master has the stamp number set to 3. The data bits contain the data high byte for the parameter being written to.

Bit	b15-b12	b11-b8	b7-b4	b3-b0
Value	0XXX	0011	0000	1011

Data word=0x030B Stamp number=3 Data high byte=0x0B

When the first telegram has been received and processed in the DP node, it is mirrored in the non-cyclic IN word. This is the signal to the master controller program that the third telegram of the message has been received and understood, and the fourth telegram can be transmitted.

TELEGRAM 4

The fourth telegram from the DP master has the stamp number set to 4. The data bits contain the data low byte for the parameter that is being written to.

Bit	b15-b12	b11-b8	b7-b4	b3-b0
Value	0XXX	0100	0101	0000

Data word=0x0450 Stamp number=4 Data low byte=0x50
When the fourth telegram has been received and processed in the DP node, it will write the data (#0.12 = 80) as transmitted. If the operation is successful, the ERR bit is reset to 0 and the telegram is reflected in the non-cyclic IN word.

Bit	b15-b12	b11-b8	b7-b4	b3-b0
Value	00XX	0100	0101	0000

Data word=0x0450 Stamp number=4 Data low byte=0x50

If there was a problem with writing the data to the defined parameter, e.g. parameter is read only, does not exist, or data is out of range, the ERR bit is set to 1.

Bit	b15-b12	b11-b8	b7-b4	b3-b0
Value	01XX	0100	XXXX	XXXX

Data word=0x44XX Stamp number=4

6.3 - Interbus Set-up using Non-Cyclic Data

The VARMECA 20 Interbus interface can also be configured via the non-cyclic data channel. Menu 15 in the drive contains the parameter values currently being used, and these can be modified as required.

Cyclic data mapping parameters can be edited via the non-cyclic data. Any changes made to the data mapping will take effect immediately, but changes are not stored automatically. Setting #15.31 (not available in VARMECA 20) to 1 will store the mapping changes in the Interbus interface, and reset the Interbus interface. This will cause a break in the network, and cause the network communications will stop.

7 - INTERBUS CMD TOOL SUPPORT FILES

7.1 - Interbus CMD Tool

The CMD Tool is the software package used to configure and diagnose the Generation 4 Interbus master controllers. An external database file is available from LEROY-SOMER that contains full product descriptions and bitmaps for VARMECA 20. This allows easy inclusion of the VARMECA 20 in Interbus networks. Database files are provided to describe the VARMECA 20 in each data format. The non-cyclic channel configuration is also included for data formats that support PCP. VARMECA 20 bitmap files are also included.

Drive	Filename
LS_VA_20	LS_IBS.ZIP

The file CT_IBS.ZIP contains a text file README_CT.TXT. This contains the instructions on how to install the VARMECA 20 support files to the appropriate directories, and import them into the CMD Configuration Tool. Contact your local Drive Centre to obtain the above
file.

NOTE **The Interbus CMD Tool support files are not essential when configuring an Interbus network. Each node can be entered manually, or the master controller can scan the network to determine which nodes are connected.**

7.2 - Interbus Data Formats

Format (#15.05)	Non-cyclic data mode	Cyclic words	Interbus ID Code	Process Data Channel	CMD Tool Ref
0.02	0	2	0x03 (3)	32 bits	F_002
0.03	0	3	0x03 (3)	48 bits	F_003
1.02	1	2	0xF3 (242)	32 bits	F_102
1.03	1	3	0xF3 (243)	48 bits	F_103
2.02	2	2	0x03 (3)	48 bits	F_202
2.03	2	3	0x03 (3)	64 bits	F_203

8 - DIAGNOSTICS

The information from the parameters described below should always be noted before contacting LEROY-SOMER for technical support.

8.1 - Fieldbus Code

VARMECA 20: #15.01

The fieldbus code identifies the fieldbus option module last fitted to the VARMECA 20.

Code	Fieldbus Type
1	Profibus-DP
2	Interbus-S

8.2 - Firmware Version

VARMECA 20: #15.02

The version of firmware present in the Interbus interface can be read from #15.02 in the VARMECA 20.

Major Code (#15.02)	Minor Code (#15.50)	Firmware Version
100	00	V1.00.00

8.3 - Node Address

The node address is automatically assigned by the master controller during network initialisation. The address assigned to a node depends on the physical connection position within the Interbus-S network ring.

8.4 - Network Data Rate

VARMECA 20: #0.46 or #15.04 (Read only)

The data rate for Interbus networks is fixed at 500 Kbits/sec. #0.46 will always display 4.

9 - ADVANCED FEATURES

9.1 - Network Loss Trip

VARMECA 20: #15.07

0 = trip disabled 1 to 2000 = trip delay time

The Interbus interface counts the number of valid network cycles received in a time period specified by #15.07. The trip is triggered if no messages are received in a given sample period, and messages were received in the previous sample period. The default setting for #15.07 is 200ms.

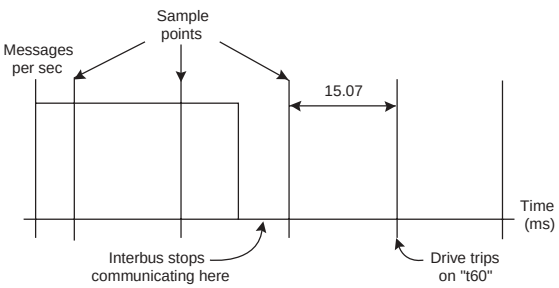

As can be seen from the diagram, the actual time from network loss to drive trip will range from #15.07 ms to 2 * #15.07 ms. By decreasing #15.07, the maximum trip time will be reduced, but if the trip time is set too low, spurious network loss trips will be seen.

The actual network loss trip time depends entirely on the number of messages per second being received under normal operation. As a rough guide, the network loss trip time (#15.07) should be set such that a minimum of 10 messages will be received in any given sample period under normal operating conditions.

9.2 - Non-Cyclic Parameter Store

Interbus: #15.31

0 = no action 1 = store Interbus configuration

#15.31 is not available inside the VARMECA 20 itself. It stores the current configuration parameters, and resets the Interbus interface. This allows and changes made via the non-cyclic communications channel to be stored and take effect.

#15.31 will not implement a change to the data format of Interbus interface. This can only be done during the initialisation sequence of the SUPI chip, immediately after power up.

10 - QUICK REFERENCE

10.1 - INTERBUS-S Parameter List (Access via CDC VMA20 keypad or PEGASE VMA20 soft)

Display	Designation	Setting range	Factory setting
1500 LOG. OPTION	Software issue of interface board		
1501 TYPE OPTION	Option Identity code : 1 = PROFIBUS DP, 2 = INTERBUS S, 5 = DEVICE NET, 6 = CAN OPEN	1, 2, 5 or 6	2
1502 LOG1 CT	Software issue of fieldbus board		
1503 ADDRESS VMA	VARMECA 20 mode address	0/255	12
1504 BAUD RATE	Baud rate : 0 = 12 M bits/s, 1 = 6 M bits/s, 2 = 3 M bits/s, 3 = 1,5 M bits/s, 4 = 500 M bits/s, 5 = 187,5 K bits/s, 6 = 93,5 K bits/s, 7 = 45,4 K bits/s, 8 = 19,2 K bits/s, 9 = 9,6 K bits/s	0 to 9	
1505 DATA CONFIG	Data format : HW byte = 1 = one acyclic word LW byte = 2 = two cyclic words LW byte = 3 = three cyclic words	1 acycl. 3 cycl. 0 acycl. 3 cycl. 0 acycl. 2 cycl.	1 acycl. 3 cycl.
1507 TIMEOUT	Time out delay	0 to 250 ms	20
1508 BYTE CONFIG	Byte configuration LW / HW or HW / LW : ON = HW / LW Big Endian OFF = LW / HW Little Endian	ON / OFF	OFF
1511 P2 IN CYCL	Cyclic parameter #2 read	Any of the parameter	0017
1512 P3 IN CYCL	Cyclic parameter #3 read	Any of the parameter	0016
1521 P2 OUT CYCL	Cyclic parameter #2 write	Any of the parameter	0043
1522 P3 OUT CYCL	Cyclic parameter #3 write	Any of the parameter	0010
1550 LOG2 CT	Software issue of fieldbus board		
1551 BUS FACTORY SETTINGS	Fieldbus parameter factory settings	ON / OFF	OFF
1570 BUS ENABLE	Assigment of control I/O : ON = local OFF = fieldbus	ON / OFF	ON
1571 SUPERVISION	Monitoring of communication : ON / OFF	ON / OFF	OFF
1572 REF VIA BUS	Assigment of reference input : ON = local OFF = fieldbus	ON / OFF	ON
1573 LOCAL REF.	Speed reference via fieldbus		50 Hz
1580 CTRL WORD	Control word of VARMECA 20 (access via P1 IN CYCL, cannot be modified)		
1581 STATUS WORD	Status word of VARMECA 20		

10.2 - Interbus-S Data Formats

Format (#15.05)	Non-cyclic words	Cyclic words	Consistency	Comment
0.02	0	2	Full	
0.02	0	2	None	
0.03	0	3	Full	
0.03	0	3	None	
1.03	1	3	Full	These modes are the formats used by the Unidrive and Mentor II Interbus-S interfaces
1.03	1	3	None	

10.3 - Control word

bit	Description VARMECA 20 (0-80)
0	Not used
1	ON / OFF
2	Not used
3	Rotation direction can only be changed when OFF
4	Not used
5	Not used
6	Reserved
7	Reserved
8	Reserved
9	Reserved
10	Reserved
11	Reserved
12	Reserved
13	Reserved
14	Reserved
15	Not used

10.4 - Status word

bit	Description VARMECA 20 (0-81)
0	Not used
1	Status Drive
2	Signal for 0 speed
3	Not used
4	Not used
5	Signal for reference reached
6	Not used
7	Signal for Thermal limitation
8	Signal for current limitation
9	Signal for maximal pressure
10	Signal for pump priming
11	Not used
12	Reserved
13	Not used
14	Not used
15	Not used

en

10.5 - Parameter adresses

Parameter address Menu.Address	Type of parameter	Unit	Display on Keypad	Designation	Setting range VMA A20	Setting range VMA B20	Factory setting
00.01	Read / Write	Hz	**P01 F- min**	Minimum operating frequency	6 to Fmax		12Hz
00.20	Read / Write	Hz	**P02 REF 0V/ 4mA**	Calibration of the minimum reference 0 V or 4 mA	0 to Fmax		12Hz
00.02	Read / Write	Hz	**P03 F- max**	Maximum operating frequency	32 to 220Hz	32 to 100Hz	50 or 80Hz
00.19	Read / Write	Hz	**P04 REF 10V/ 20mA**	Calibration of the maximum reference 10 V or 20 mA	32 to 220Hz	32 to 100Hz	50 or 80Hz
00.03	Read / Write	s	**P05 ACCEL. RAMP**	Acceleration ramp Time to pass from 0 to 50 Hz Increment	0 to 100s 1s	0 to 40s 0.1s	3s
00.04	Read / Write	s	**P06 DECEL. RAMP**	Deceleration ramp Time to pass from 50 to 0 Hz Incr ment	0 to 100s 1s	0 to 40s 0.1s	3s
00.30	Read / Write	switch	**P07 STOP MODE**	Stop mode : **freewheel** = freewheel stop **ramp** = stop according to ramp	ramp, freewheel		ramp
00.06	Read / Write	V	**P08 UN - MOT**	Voltage applied to the motor from the base frequency	0 to 480V		230 or 400V
00.07	Read / Write	Hz	**P09 FN - MOT**	Motor base frequency	50 to Fmax		50Hz
00.54	Read / Write	switch	**P10 CONTROL U/F**	Selection of voltage / frequency ratio **constant** = **fixed U/F**, the P08 voltage will be applied at the P09 frequency point **dynamic** = **dynamic U/F**, the voltage adapts automatically the motor voltage to the motor load (according to K3 position)	constant, dynamic		Adapted to rating
00.21	Read / Write	%	**P11 BOOST**	Value of voltage applied in low frequencies (percentage of voltage)	0 to 40%		Adapted to rating
00.22	Read / Write	%	**P12 OVERBOOST**	Value of voltage during starting phase (percentage of voltage)	0 to 50%		Adapted to rating
00.32	Read / Write	switch	**P13 F PWM**	Switching frequency	4,6,8,11KHz		Adapted to rating
00.34	Read / Write	switch	**P14 CONFIG**	Terminal block configuration : **STANDARD** **CONFIG.1 =** 2 preset speeds + analog reference **CONFIG.2** = 3 preset speeds and analog reference — 1 operating direction **CONFIG.3** = correction of an external reference with the local button **CONFIG.4** = 2 preset speeds proportional to the reference — 1 operating direction **CONFIG.5** = Pressure or flow control with PI regulation **CONFIG.6** = Jog control **CONFIG.7** = Faster and slower control (require P60 turned ON)	STANDARD CONFIG.1 CONFIG.2 CONFIG.3 CONFIG.4 CONFIG.5 CONFIG.6 Not available	STANDARD CONFIG.1 Not available CONFIG.3 CONFIG.4 Not available CONFIG.6 CONFIG.7	STANDARD
00.10	Read / Write	Hz	**P15 VP1-1**	Preset speed 1 in CONFIG. 1 and 4	6 to Fmax	6 to Fmax	50Hz
00.11	Read / Write	Hz	**P16 VP2-1 VP1-2**	Preset speed 2 in CONFIG. 1 and 4 or preset speed 1 in CONFIG. 2	6 to Fmax	6 to Fmax	60Hz
00.12	Read / Write	Hz	**P17 VP2-2 VP3-1**	Preset speed 2 in CONFIG. 2 or preset speed 3 in CONFIG. 1 with extension ESFR VMA	6 to Fmax	6 to Fmax	40Hz
00.13	Read / Write	Hz	**P18 VP3-2**	Preset speed 3 in CONFIG. 2	6 to Fmax	Not available	70Hz
00.35	Read / Write	switch	**P19 ROTATION**	**Choice of direction of rotation in CONFIG. 2**	FORWARD / REVERSE		FORWARD
00.33	Read / Write	switch	**P20 SELECT - N 2**	Terminal 2 assignment : **OUTPUT N** = Analog output of frequency image : 0V = 0 Hz / 10v = Fmax. **INPUT PI** = Analog input of PI regulation 0-10V or 4-20ma (according to minidip K2) **OUTPUT I** = Analog output of motor current image : 0V = 0A / 10V = 10A **OUTPUT P** = Analog output of motor power image : 0V = 0kW / 10V = 5kW	OUTPUT N INPUT PI OUTPUT I OUTPUT P	OUTPUT N Not available Not available Not available	OUTPUT N
00.08	Read / Write		**P21 PI - K PROPO.**	Proportional gain of the PI loop	1 to 100	Not available	10
00.09	Read / Write		**P22 PI - K INTEG.**	Integral gain of the PI loop	1 to 100	Not available	10
00.17	Read only	Hz	**P23 F - MOT**	Value of motor operating frequency	Value in Hz		
00.16	Read only	A	**P24 I - MOT**	Value of motor operating current	Value in A		
00.36	Read only	switch	**P25 FAULT**	Last fault in memory OK = no fault I2T MOTOR = motor overheating LEVEL In = exceeded current threshold before overload trip OVER CURRENT = overcurrent LOCKED ROTOR = locked rotor UNDER VOLT.= DC bus undervoltage EEPROM = eeprom fault RS 232 = serial communication fault ENABLE = drive enabled and locked LIMIT.I = current limitation reached OVERLOAD = motor overload UNDER P1 = under pressure operation FAULT POSITION K2 = short circuit on supply of control I/O	**OK** **I2T MOTOR** **Not available** **OVER CURRENT** **LOCKED ROTOR** **UNDER VOLT.** **EEPROM** **RS 232** **ENABLE** **LIMIT.I** **OVERLOAD** **UNDER P1** **FAULT POSITION K2**	**OK** **I2T MOTOR** **LEVEL In** **OVER CURRENT** **LOCKED ROTOR** **UNDER VOLT.** **EEPROM** **RS 232** **ENABLE** **LIMIT.I** **OVERLOAD** **Not available** **FAULT POSITION K2**	
00.53	Read / Write	switch	**P26 STOP - F-min**	Enabling of **STOP** signal. When the reference is less than Fmin, it forces the motor to stop.	OFF / ON		OFF
00.44	Read / Write	switch	**P27 RELAY**	Relay assignment : FAULT = relay assigned to fault F-MOT=REFERENCE = speed reference achieved (end of ramp) BRAKE = brake control	FAULT F-MOT = REFERENCE BRAKE		FAULT
00.18	Read only	V	**P30 V Bus DC**	Value of DC bus voltage Umains = VDCbus / 1.4	value in Volts DC		

INTERBUS - S
Option card for VARMECA 20
QUICK REFERENCE

Parameter address Menu.Address	Type of parameter	Unit	Display on Keypad	Designation	Setting range VMA A20	Setting range VMA B20	Factory setting
00.26	Read only	switch	**P31 ETAT K1- K2- K3**	Status of minidip K1,K2,K3 **K1** : selection of analog reference 010 = 0 to 10V ; 420 = 4 to 20mA **K2** : selection of analog input terminal 2 010 = 0 to 10V ; 420 = 4 to 20mA **K3** : Selection of voltage / frequency ratio U/F cst = fixed U/F independantly of P10 U/F dyn = factory setting defined in P10	010 - 010 - U/F dyn 010 - 420 - U/F dyn 010 - 010 - U/F cst 010 - 420 - U/F cst 420 - 010 - U/F dyn 420 - 420 - U/F dyn 420 - 010 - U/F cst 420 - 420 - U/F cst		
00.75	Read only	switch	**P32 STATUS N13**	Status of added logic input with extension ESFR VMA terminal # 13 (see P69 and P70)	Not available	OFF / ON	
00.27	Read only	switch	**P33 STATUS N9**	Status of logic input terminal # 9	OFF / ON		
00.28	Read only	switch	**P34 STATUS N8**	Status of logic input terminal # 8	OFF / ON		
00.29	Read only	switch	**P35 STATUS N7**	Status of logic input terminal # 7	OFF / ON		
00.47	Read only	switch	**P36 VARMECA**	Status of VARMECA	OFF / ON		
00.68	Read only	¡C	**P42 O CTN ELEC**	Value of IGBT temperature	Value in ¡C		
00.56	Read only		**P90 LOG1VARMECA**	VARMECA software issue (year #)			
00.57	Read only		**P91 LOG2VARMECA**	VARMECA software issue (week & day #)			
00.82	Read only		**P92 LOG2VARMECA**	VARMECA software issue			
	Not available		**P93 LOG CDC_VMA**	Keypad software issue			
00.14	Read / Write		**P28 CAL_MOT**	VARMECA20 rating			
	Not available		**P29 CODE**	Acces code (limited)	reserved LEROY-SOMER		
00.69	Read / Write	s	**P50 T1 - P - min**	Temporization at draining pressure	0 to 120s	Not available	10s
00.70	Read / Write	%	**P51 P - min**	Pump draining pressure (% of max. pressure)	0 to 100%		10%
00.71	Read / Write	s	**P52 T2 - F - min**	Stop delay for minimal pressure	0 to 120s		10s
00.74	Read / Write	Hz	**P54 PI DECAL**	PI delay	0 to 5 Hz		0
00.23	Read only		**P55 REF.PI**	Value of PI reference	0 to 20000		
00.52	Read only		**P56 INPUT PI**	Value of PI feedback	0 to 20000		
00.73	Read only	switch	**P57 ALARM**	Status of pump operation in CONFIG.5 OK = No fault UNDER P1 = Pump in under pressure operation ALARM Q = Alarm for low or high flow	OK UNDER P1 ALARM Q		
00.72	Read / Write	Hz	**P58 VP5**	Digital preset speed (PI reference) in CONFIG.5	from 0 to 100% of Fmax		0
Not available			**P59 BAR FACTOR**	Direct reading pressure (in bars) factor on keypad CDCVMA20	1 to 20		1
00.66	Read / Write	switch	**P60 CONTROL DYN.**	Enable of "Handling" configuration	OFF/ON		OFF
00.58.	Read / Write	Hz	**P61 FD BRAKE**	Brake release frequency	1 to 20 Hz		0
00.59.	Read / Write	Hz	**P62 FB BRAKE**	Brake hold frequency	1 to 20HZ		0
00.60	Read / Write	s/100	**P63 TD BRAKE**	Brake release temporization (unit = 0,01s)	0 to 100		0
00.61	Read / Write	s/100	**P64 TORQUE**	Brake magnetization temporization (unit = 0,01s)	0 to 100		0
00.62	Read / Write	s/100	**P65 T DC INJECT.**	DC injection temporization at end of deceleration (unit = 0,01s)	0 to 1000		0
00.63	Read / Write	s/100	**P66 TB BRAKE**	Brake hold temporization (unit = 0,01s)	0 to 200		0
00.64	Read / Write	V	**P67 UC DC INJECT.**	Level of DC injection at end of deceleration (unit = % of motor base voltage)	0 to 100%		0
00.65	Read / Write	%	**P68 ID BRAKE**	Current threshold before brake release (unit = % of motor rated current)	0 to 100%		0
00.83	Read / Write	switch	**P69 VMA ESFR**	Enable of extension ESFR VMA	Not available	OFF / ON	OFF
00.84	Read / Write	switch	**P70 N13**	Terminal # 13 assigment (only with ESFR VMA) : VP3-1 preset speed 3 in CONFIG.1 D Brake brake control relay	Not available	VP3-1 D Brake	VP3-1
00.85	Read / Write	%	**P71 LEVEL IN**	Current threshold for overload trip unit = % of motor rated current	Not available	0 to 100%	0
00.86	Read / Write	s	**P72 T LEVEL IN**	Trip delay when current exceed P71(unit = 0,01s)	Not available	0 to 100	0
15.00	Read only		**1500 LOG. OPTION**	Software issue of interface board			
15.01	Read only		**1501 TYPE OPTION**	Option Identity code : 1 = PROFIBUS DP, 2 = INTERBUS S, 5 = DEVICE NET, 6 = CAN			2
15.02	Read only		**1502 LOG1 CT**	Software issue of fieldbus board			
15.03	Read only		**1503 ADDRESS VMA**	VARMECA 20 mode address	0/255		12
15.04	Read only	switch	**1504 BAUD RATE**	Baud rate : 0 = 12 M bits/s, 1 = 6 M bits/s, 2 = 3 M bits/s, 3 = 1,5 M bits/s, 4 = 500 M bits/s, 5 = 187,5 K bits/s, 6 = 93,5 K bits/s, 7 = 45,4 K bits/s, 8 = 19,2 K bits/s, 9 = 9,6 K bits/s	0 to 9		
15.05	Read / Write	switch	**1505 DATA CONFIG**	Data format : HW byte = 1 = one acyclic word LW byte = 2 = two cyclic words LW byte = 3 =three cyclic words	1 acycl. 3 cycl. 0 acycl. 3 cycl. 0 acycl. 2 cycl.		1 acycl. 3 cycl.
15.07	Read / Write	ms	**1507 TIMEOUT**	Time out delay	0 to 250 ms		20
15.08	Read / Write	switch	**1508 BYTE CONFIG**	Byte configuration LW / HW or HW / LW : ON = HW / LW Big Endian OFF = LW / HW Little Endian	ON / OFF		OFF
15.11	Read / Write		**1511 P2 IN CYCL**	Cyclic parameter #2 read	Any of the parameter		0.17
15.12	Read / Write		**1512 P3 IN CYCL**	Cyclic parameter #3 read	Any of the parameter		0.16
15.21	Read / Write		**1521 P2 OUT CYCL**	Cyclic parameter #2 write	Any of the parameter		0.43
15.22	Read / Write		**1522 P3 OUT CYCL**	Cyclic parameter #3 write	Any of the parameter		0.10
15.50	Read only		**1550 LOG2 CT**	Software issue of fieldbus board			
00.37	Read / Write	switch	**1570 BUS ENABLE**	Assigment of control I/O : OFF = local ON = fieldbus	ON / OFF		ON
00.39	Read / Write	switch	**1571 SUPERVISION**	Monitoring of communication : ON / OFF	ON / OFF		OFF
00.43	Read / Write	Hz	**1573 LOCAL REF.**	Speed reference via fieldbus			50 Hz
00.79	Read / Write	switch	**1572 REF VIA BUS**	Assigment of reference input : OFF = local ON = fieldbus	ON / OFF		ON
00.80	Read / Write		**1580 CTRL WORD**	VARMECA 20 CONTROL WORD (access via P1 IN CYCL, cannot be modified)			
00.81	Read only		**1581 STATUS WORD**	VARMECA 20 STATUS WORD			

Parameters CAN ONLY be changed when VARMECA 20 is OFF

en

MOTEURS LEROY-SOMER 16015 ANGOULÊME CEDEX - FRANCE

338 567 258 RCS ANGOULÊME
S.A. au capital de 62 779 000 €

www.leroy-somer.com