DO NOT SCALE DRAWING, IF IN DOUBT, PLEASE ASK.

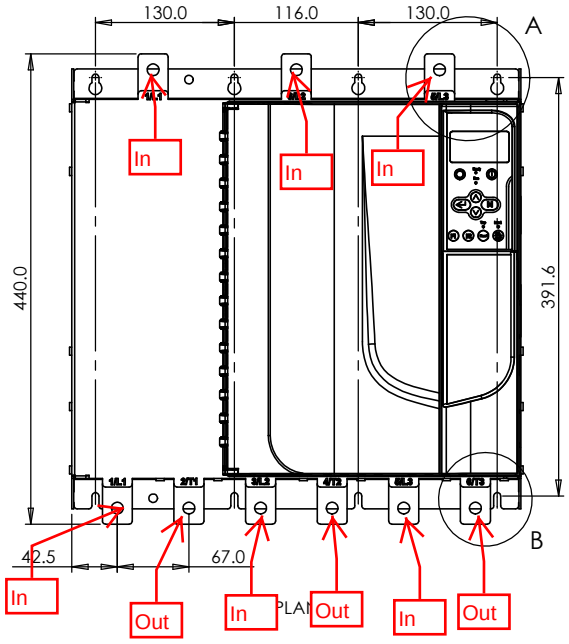

PLAN

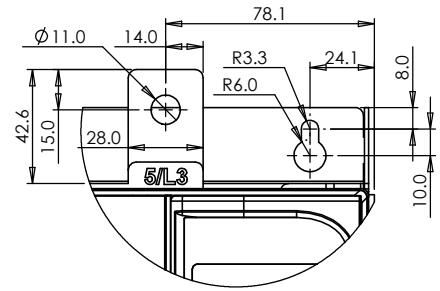

DETAIL A
SCALE 1 : 2

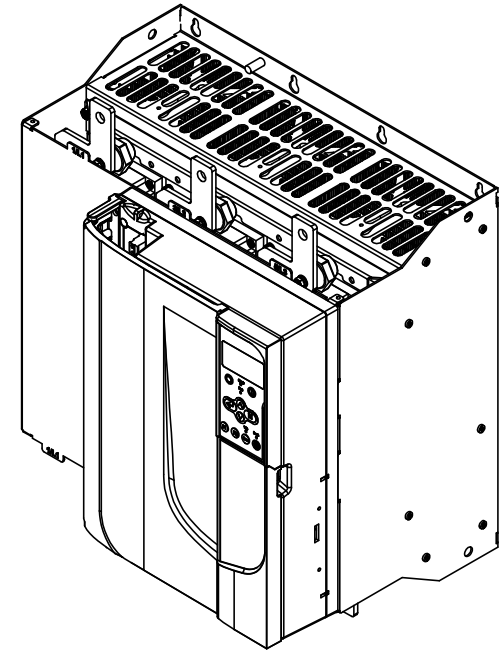

PICTORIAL

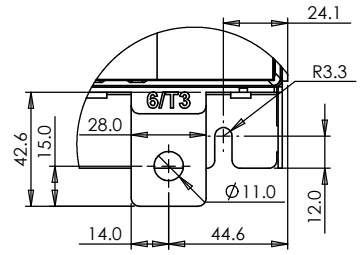

DETAIL B
SCALE 1 : 2

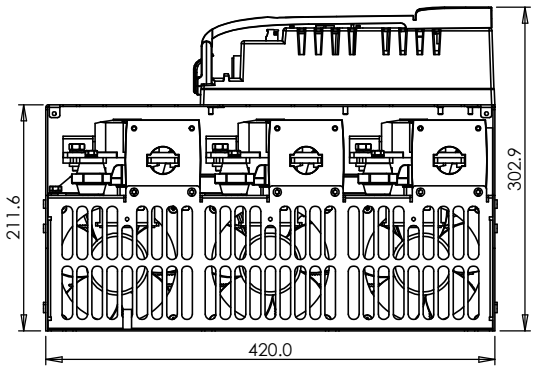

FRONT ELEVATION

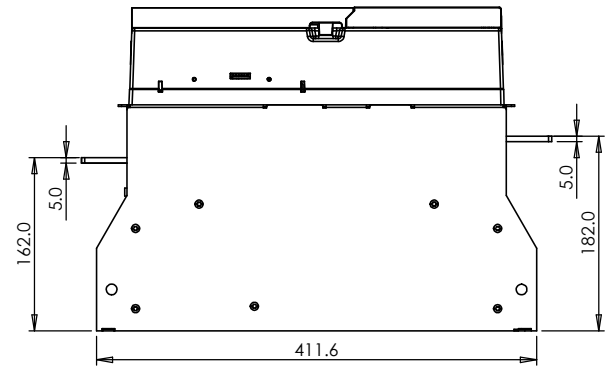

RIGHT ELEVATION